23,8" Panel-PC Series-1B
Intel® Core™



- 23,8" TFT-LCD, 1920 x 1080 pixels
- Processor: Intel® Core™ i3 / i5 / i7 up to 10th Gen.
- Die-cast aluminium housing
- Flush frame design, IP65 on the front
- Fanless cooling system
- Reading angle H: 178° / V: 178°

Description

The WACHENDORFF Select Series-1 industrial panel PCs are available in display sizes ranging from 10,1" to 23. 8" and can be equipped with projected capacitive, resistive or no touch. The projected capacitive touch enables multi-touch operation with an appropriate operating system. If pressure-sensitive operation is required (e.g. with gloves), the resistive touch is the right choice. A variety of different processors are available, from the energy-efficient Intel® Celeron® J4125 to a 10th generation Intel® Core™ i7. Integrate up to 64 GB of RAM to meet the most demanding requirements. The front panels are absolutely flush with the die-cast aluminium housing. The housing is IP65 rated from the front. The unique fanless thermal design of the die-cast aluminium housing enables effective temperature control.

Product details

Power supply:	Hollow connector 5.5 x 2.5 mm: 12 VDC to 36 VDC 2 pin connector: 12 VDC to 36 VDC
Power consumption:	i3 / i5 / i7 of the 6th and 7th gen. max. 95W i3 / i5 / i7 of the 8th and 10th gen. max. 105W
Display:	23,8" TFT-LCD
Resolution:	1920 x 1080 pixels
Aspect ratio:	16:9
Brightness:	250 cd/m²
Colours:	16,7 M
Reading angle:	H: 178° / V: 178°
Touchscreen:	• Projected capacitive touch • Resistive touch • without touch
Glas hardness:	6H, 3H or 7H
Processor:	Intel® Core™ i3-6100U (2,3 GHz), Intel® Core™ i5-6200U (2,7 GHz), Intel® Core™ i7-6500U (2,8 GHz), Intel® Core™ i5-7200U (3,1 GHz), Intel® Core™ i7-7500U (3,5 GHz), Intel® Core™ i3-8145U (3,9 GHz), Intel® Core™ i5-8265U (3,9 GHz), Intel® Core™ i7-8565U (4,6 GHz), Intel® Core™ i3-10110U (4,1 GHz), Intel® Core™ i5-10210U (4,2 GHz), Intel® Core™ i7-10510U (4,9 GHz)
RAM:	Max. 16GB for Intel® Core™ up to 7. Gen. Max. 64GB for Intel® Core™ from 8. Gen.
SSD/HDD:	Max. 1 TB
I/O-ports:	USB: 2 x USB 2.0 Typ A, 2 x USB 3.0 Serial: 2x RS-232 DB-9 Ethernet: 2x RJ-45 Gigabit Ethernet WLAN: 1x IEEE 802.11ac Bluetooth: 1x Bluetooth 4.2 Display: 1x HDMI, 1x VGA Audio: 1x Audio out, 3,5 mm jack
Expansion slots:	None
Housing:	Die-cast aluminium housing
Mounting:	VESA 75 x 75, VESA 100 x 101 Panel mount
Protection class:	IP65 on the front
Dimensions (WxHxD):	606 mm x 376 mm x 67 mm
Weight:	approx. 8,7 kg
Certification:	CE, RoHS, FCC, REACH
Environmental conditions:	Operation: -10 °C to + 65 °C, 10 % to 80 %.rF Storage: -20 °C to +70 °C, 10 % to 90 %.rF
Operating system:	Windows® 10 IoT Windows® 11 IoT Linux
Options:	LTE
Packing list:	1 x device 1 x Mounting material
Tariff number:	84715000
Manufacturer:	Wachendorff Prozesstechnik

Order-No. Product

PPC002-238B	23,8" Industrial Panel PC, Intel® Core™

Order-No. Accessories

360017000012	Power cord for ext. power supply

BZ.36.010.2000059	External power supply, 230 VAC to 12 VDC, 12V5A, CPU J1900 / J4125 /I3-6th / I5-6th /I 5-7th
BZ.36.010.2000057	External power supply, 230 VAC to 12 VDC, 19V4,7A, CPU I3-8th / I3-10th / I5-8th / I5-10th / I7-8th / I7-10th
BZ.36.010.2000025	External power supply, 230 VAC to 12 VDC, 12V7A, CPU I7-6th / I7-7th

Drawings

Dimensions (mm) and STL-Data/Viewer:

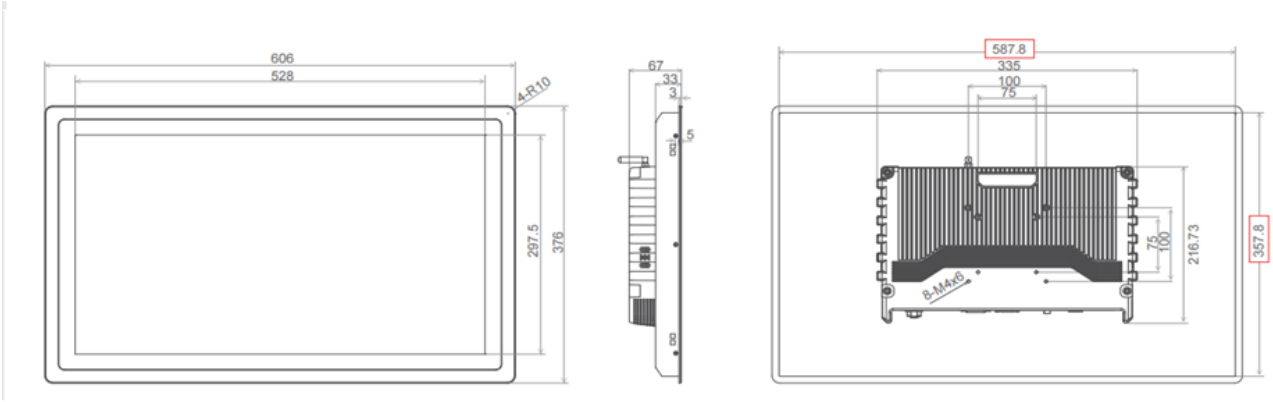

WACHENDORFF
Prozesstechnik GmbH & Co. KG

Wachendorff Prozesstechnik GmbH & Co. KG
Industriestrasse 7 • 65366 Geisenheim
Germany

Tel: +49 (0) 67 22 / 99 65 - 20
E-Mail: wp@wachendorff.de
www.wachendorff-prozesstechnik.de