Brand of NTN corporation

# Technical data

## UCPE211-32

Bearing units



Grey cast housing, radial insert ball bearing with socket set screws,seal with slinger

## KIT CONTENT

**UC211-32G2, PE211**

## VISUAL (S)

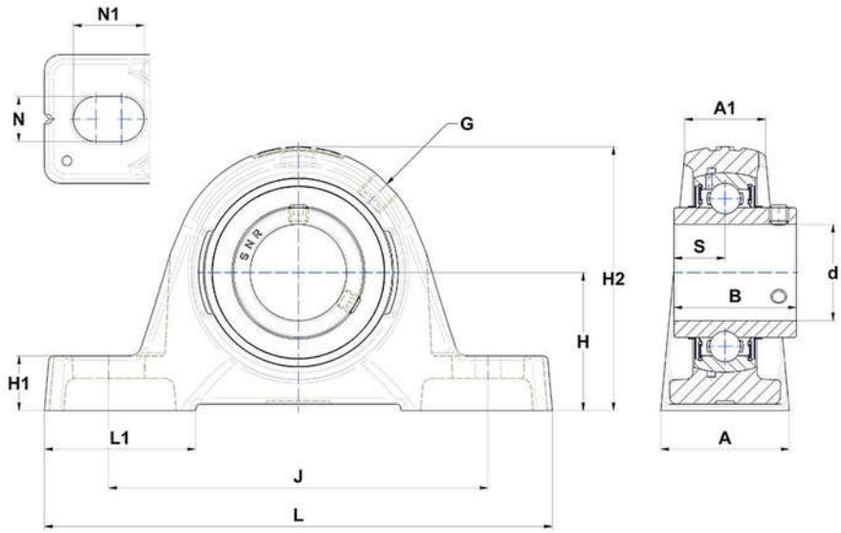


## PRODUCT DEFINITION

| | |
|---|---|
| **Brand** | SNR |
| **A - Housing width** | 60 mm |
| **A1 - Housing top width** | 35 mm |
| **B - Width of Inner Ring** | 55,6 mm |
| **d - Shaft diameter** | 50,8 mm |
| **G - Grease fitting** | R1/8" |


**NTN Europe**
1 rue des Usines · BP 2017 · 74010 Annecy Cedex · France · Tel. +33 (0)4 50 65 30 00
S.A. au capital de 322 639 919 € · RCS ANNECY B 325 821 072 · Id. Fiscale : FR 48 325 821 072
SIRET 325 821 072 00015 · Code APE 2815 Z · Code NACE 28.15

# UCPE211-32
Bearing units

| PRODUCT DEFINITION | |
|---|---|
| **H - Distance mounting base to centerline spheric. seating diam.** | 63,5 mm |
| **H1 - Housing foot height** | 22,5 mm |
| **H2 - Housing height** | 124,5 mm |
| **J - Mounting holes distance** | 176 mm |
| **L - Housing length** | 222 mm |
| **L1 - Housing foot length** | 68 mm |
| **N - Mounting hole dimension** | 18 mm |
| **N1 - Mounting hole length** | 30 mm |
| **S - Distance front side/bearing centre** | 22,2 mm |

| PRODUCT PERFORMANCE | |
|---|---|
| **C - Dynamic load rating** | 43550000 mN |
| **C0 - Static load rating** | 29200000 mN |
| **Operating temperature min.** | 253,15 °K |
| **Operating temperature max.** | 373,15 °K |

| OTHER FEATURES | |
|---|---|
| **Mass** | 3,57 kg |
| **Recommended tightening torque for set screw** | 16.8 N-m |