Brand of NTN Group

Technical data

CES207-22

Insert bearings



Cylindrical outer diameter, fixing by eccentric locking collar, single lip seal

VISUAL (S)

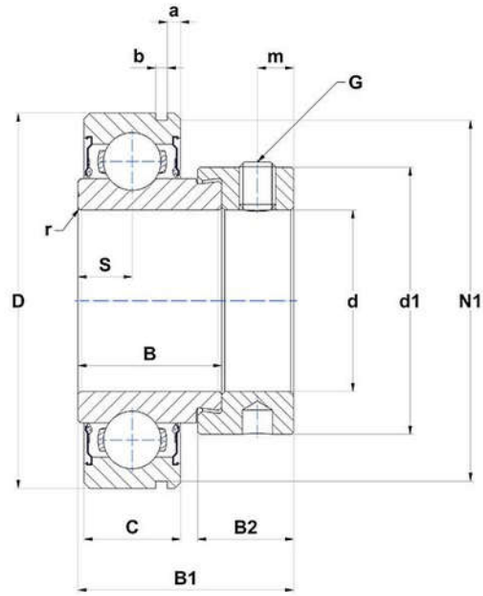

PRODUCT DEFINITION

Brand	SNR
a - Distance to grooves in OR	3,18 mm
b - Groove width in OR	1,9 mm
B - Width of Inner Ring	25,4 mm
B1 - Overall width Inner Ring	38,9 mm
B2 - Width of eccentric locking collar/nut	17,5 mm
C - Width of Outer Ring	17 mm
d - Shaft diameter	34,925 mm

CES207-22
Insert bearings

PRODUCT DEFINITION	
d1 - Outer dia of eccent. Lock. collar / nut of adapter sleeve	55,6 mm
D - Outer diameter of OR	72 mm
G - Set screw size	5/16-24UNF
m - Distance to set screw	6,5 mm
N1 - Groove dia in OR	68,81 mm
r - Radius Inner Ring	1.5
S - Distance front side/bearing centre	8,5 mm
f0 - Factor	14
SW - Wrench size	3,969 mm

PRODUCT PERFORMANCE	
C - Dynamic load rating	25700000 mN
C0 - Static load rating	15200000 mN
Operating temperature min.	253,15 °K
Operating temperature max.	373,15 °K

OTHER FEATURES	
Mass	0,51 kg
Recommended tightening torque for set screw	8 N-m

BEARING FREQUENCIES	
BPFO - Over rolling frequency on outer ring (60 rpm)	3.58161157024793 Hz
BPFI - Over rolling frequency on inner (60 rpm)	5.41838842975207 Hz
BSF - Over rolling frequency on rolling element (60 rpm)	4.69580119633806 Hz
BRF - Rotational frequency – rolling element (60 rpm)	2.34790059816903 Hz
FTF - Rotational frequency - cage (60 rpm)	0.397956841138659 Hz