Type 891

Time Counter with DIN
Dimensions for AC and DC Operation





- Low-cost
- DIN dimensions 24 x 48 mm, 48 x 48 mm or 72 x 72 mm
- Highly legible display
- Simple installation
- No reset

TECHNICAL DATA

Display	7-digit, 0 ... 99999.99 h
Digit height	5 mm, visual
Supply voltage V_{op}	acc. to order information + 10 % (230 VAC + 15 %)
Power consumption	0.7 VA or max 750 mW on DC
Operating temperature	- 10 ... + 50 °C
Storage temperature	- 20 ... + 70 °C
El. connection	screw terminals for cables of max. 2.5 mm² and AMP connector 6.3 x 0.8 mm
Mounting	with clamping frame (Ordering code 2 891 016)
Mounting position	roller axis horizontal
Protection class (IEC 144)	front IP 66; screw terminals IP 20, AMP connectors IP 00
Vibrostability	30 m/s² (10 ... 500 Hz) acc. to IEC 068-2-6
Shock stability	800 m/s² (6 ms) acc. to IEC 068-2-27
General design	acc. to DIN VDE, part 1, protection according to class II, Contamination level 2; Overvoltage category II
Weight	approx. 50 g
Approvals	UL: E 130453 (M), CSA (only AC version)
Reset	none

CONNECTION DIAGRAM

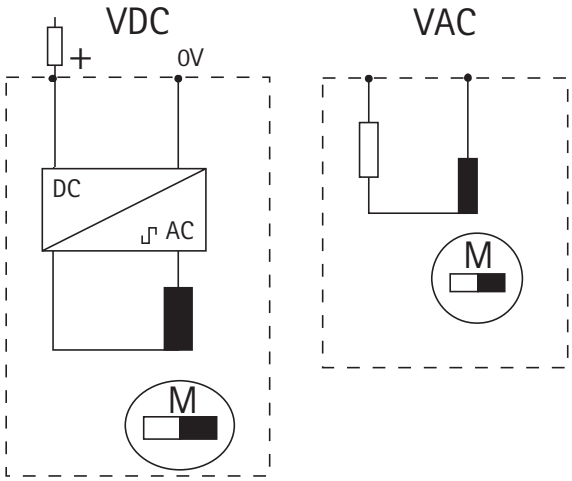

DIMENSIONS
Counter

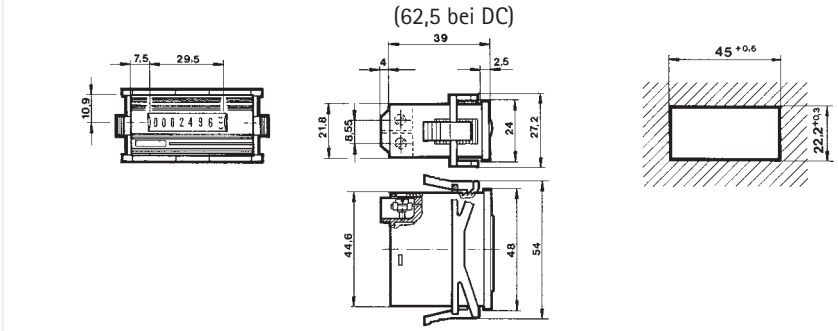

Seal: Ordering code 2 405 231 (0.5 mm)

Installation frame

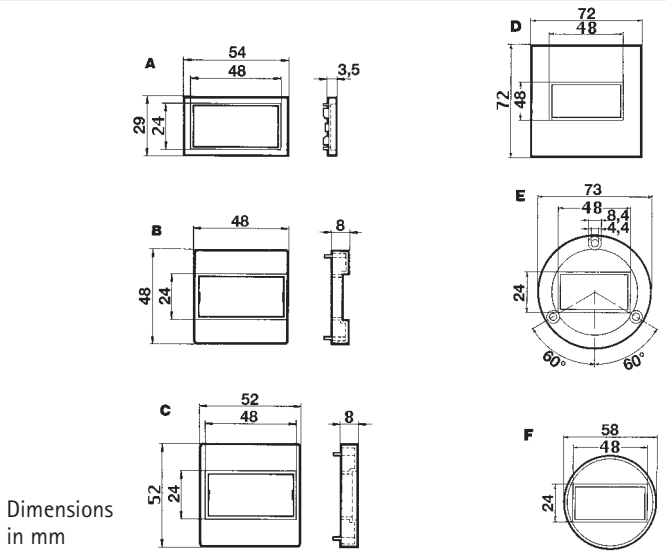

Dimensions in mm

ORDER INFORMATION
Counter

Voltage	Power consumption	50 Hz Ordering code	60 Hz Ordering code
24 VAC	0.1 VA	0 891 201	0 891 202
115 VAC	0.6 VA	0 891 203	0 891 204
230 VAC	0.7 VA	0 891 211	0 891 206
100 VAC	0.,3 VA	0 891 213	0 891 214
200 VAC	0.7 VA	0 891 215	0 891 216

Voltage	Max. power consumption	Ordering code	external resistor
12... 36 VDC	350 mW	0 891 331	
40... 60 VDC	620 mW	0 891 331	+ 6,8 kΩ/1 W
80...125 VDC	1100 mW	0 891 331	+ 15 kΩ/1 W

Installation frame

	Size	Installation cutout	Frame Ordering code	Seal Ordering code
A	54 x 29 mm	50 x 25 mm	2 405 218	2 405 232
B	48 x 48 mm	45 x 45 mm	2 405 219	2 405 233
C	52 x 52 mm	∅ 50 mm	2 405 220	2 405 234
D	72 x 72 mm	68 x 68 mm	1 405 672	2 405 235
E	∅ 73 mm	∅ 50 mm	2 405 223	2 405 237
F	∅ 58 mm	∅ 50 mm	2 405 224	2 405 236

Type 891

Time Counter for Surface Mounting, Suitable for AC and DC Operation



- Low-cost
- DIN rail attachment
- Highly legible display
- Simple installation
- No reset

TECHNICAL DATA

Display	7-digit, 0 ... 99999.99 h
Digit height	5 mm, visual
Supply voltage V_{op}	acc. to order information + 10 % (230 VAC + 15 %)
Power consumption	0.7 VA on AC - 750 mW on DC
Operating temperature	- 10 ... + 50 °C
Storage temperature	- 20 ... + 70 °C
El. connection	screw terminals for cables of max. 2.5 mm² and AMP connector 6.3 x 0.8 mm
Mounting	with screws or on DIN rail
Mounting position	roller axis horizontal
Protection class (IEC 144)	front IP 66; screw terminals IP 20, AMP connectors IP 00
Vibrostability	30 m/s² (10 ... 500 Hz) acc. to IEC 068-2-6
Shock stability	800 m/s² (6 ms) acc. to IEC 068-2-27
General design	acc. to DIN VDE, part 1, protection according to class II, Contamination level 2; Overvoltage category II
Weight	approx. 50 g
Reset	none

CONNECTION DIAGRAM

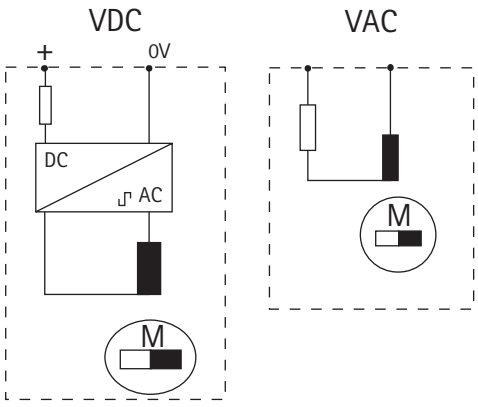

DIMENSIONS
Counter

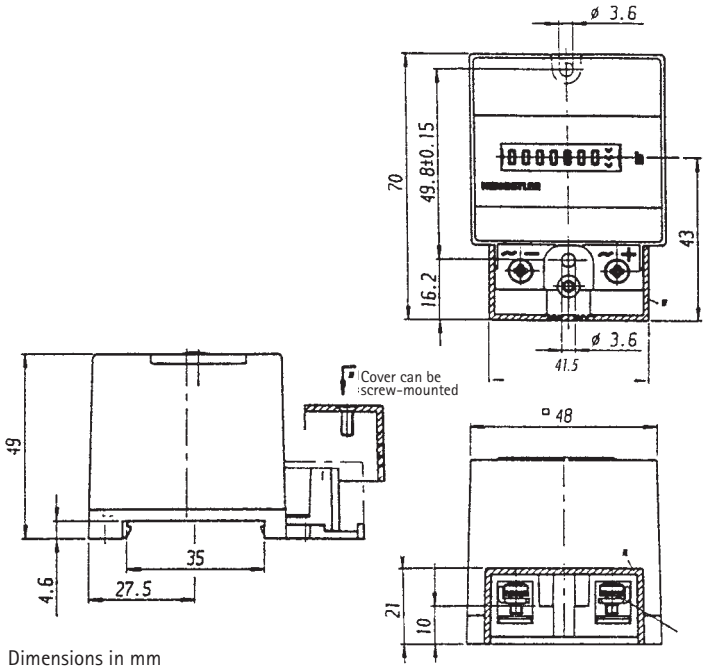

Dimensions in mm

ORDER INFORMATION
Counter

Voltage	Power consumption	Voltage tolerance	Ordeiring code
24 V 50 Hz	0.1 VA	± 10 %	0 891 501
24 V 60 Hz	0.1 VA	± 10 %	0 891 502
115 V 50 Hz	0.6 VA	± 10 %	0 891 503
115 V 60 Hz	0.6 VA	± 10 %	0 891 504
230 V 50 Hz	0.7 VA	± 15 %	0 891 511
12- 36 V DC	max. 550 mW	± 10 %	0 891 531
40- 60 V DC	max. 50 mW	± 10 %	0 891 532
80-125 V DC	750 mW	± 10 %	0 891 533