ALLEGION

0376/428/00
ISSUE 01

INSTALLATION INSTRUCTIONS

PUSH BAR PANIC BOLT DEVICE TO EN 1125 : 2008

EMERGENCY PUSH PAD BOLT DEVICE TO EN 179 : 2008

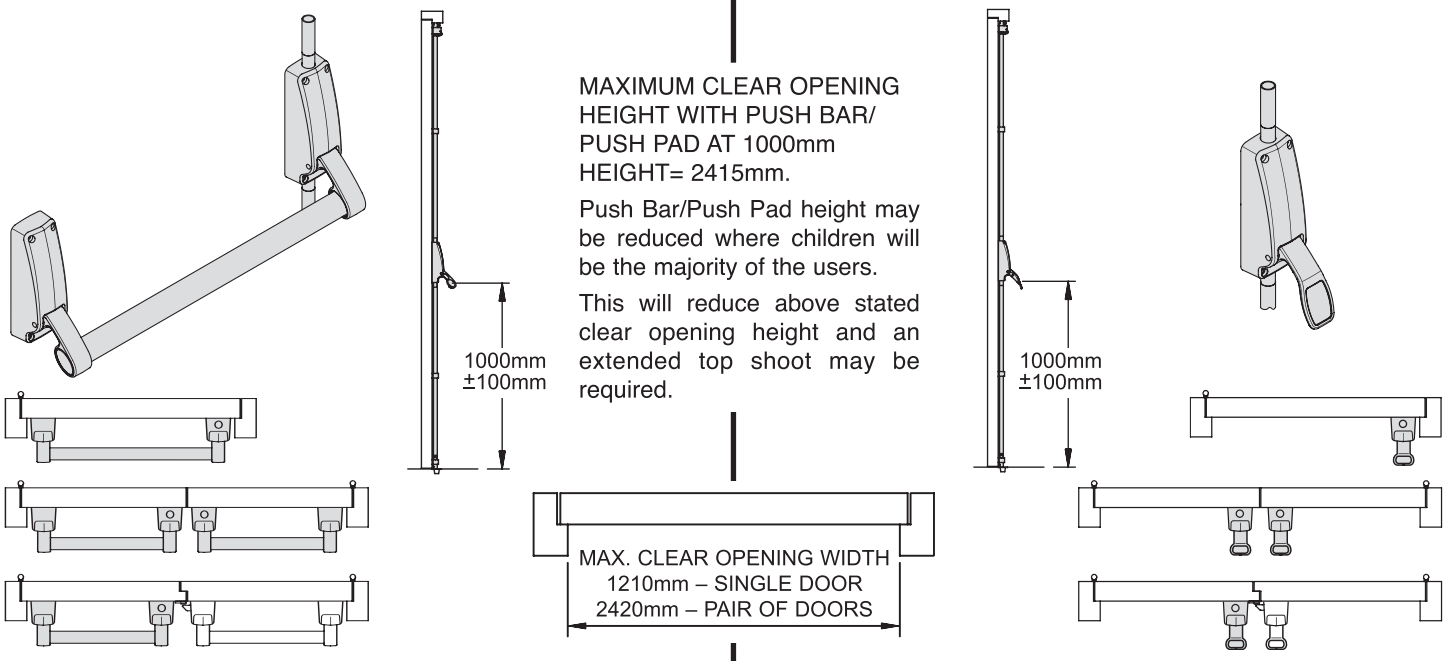

TO COMPLY WITH THE ABOVE STANDARDS, DOOR LEAF MUST NOT EXCEED 2500mm HIGH X 1300mm WIDE X 200KG WEIGHT MAX.

IMPORTANT: THE SAFETY FEATURES OF THESE PRODUCTS ARE ESSENTIAL TO THEIR COMPLIANCE WITH THE ABOVE STANDARDS. NO MODIFICATIONS OF ANY KIND, OTHER THAN THOSE DESCRIBED IN THESE INSTRUCTIONS ARE PERMITTED.

THIS PRODUCT IS INTENDED FOR USE ON SINGLE AND / OR DOUBLE LEAF OUTWARD OPENING FIRE ESCAPE ROUTE DOORS.

NOTE: These devices are self handing and will suit either Right or Left hand doors without alteration.

INSTALLATION

1) Fix Bolt Box to door for required Push Bar/Push Pad height, and at a distance from frame or leading edge of door according to application.

   See Diagram 1

   NOTE A: If installing an Outside Access Device mark and prepare door and fix as per separate instructions provided.

   NOTE B: Where the device is fitted to a double doorset with rebated meeting stiles, a co-ordinator should be fitted to ensure correct closing sequence. In such case relevant detail in DIAGRAM 1 may vary.
   Refer to instruction provided with co-ordinator.

2) Accurately measure dimensions ‘A’ & ‘B’, deduct the amounts shown and cut Top and Bottom Shoots to length.

   See Diagram 2

3) Drive Knurled Shoot Plugs into cut ends of Shoots. Support uncut end of Shoots on block of wood to prevent damage.

   See Diagram 3

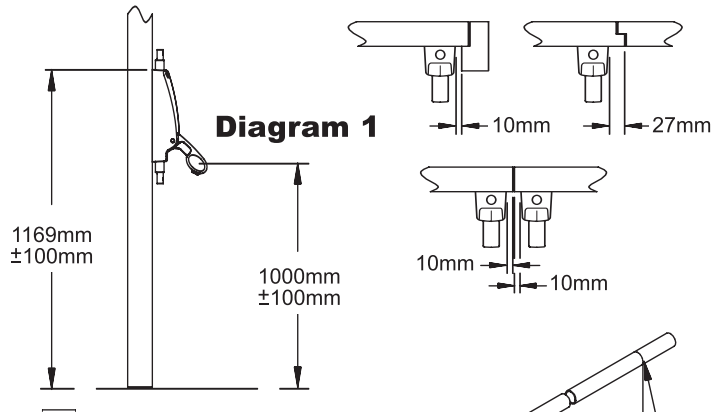

Diagram 1

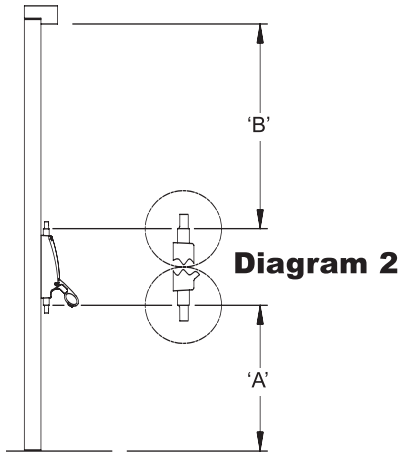

Diagram 2

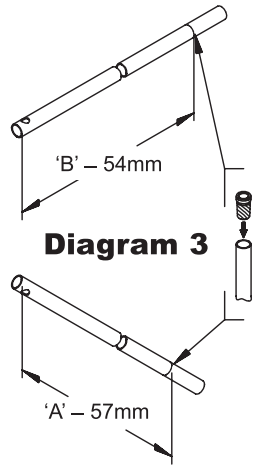

Diagram 3

INSTALLATION

1) Fix Latch Box to door at required Push Bar/Push Pad height, and at a distance from frame or leading edge of second opening leaf of a rebated pair according to application.

   See Diagram 1

   NOTE: If installing an Outside Access Device mark and prepare door and fix as per separate instructions provided.

   or

   If installing Rim Key Cylinder see instructions overleaf.

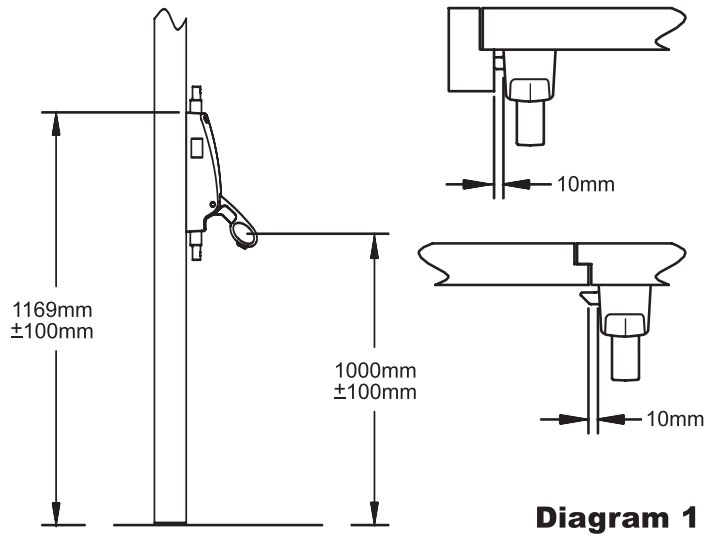

Diagram 1

2) Mark on frame position of Latchbolt and from this mark out profile of Striker Plate. Prepare and fix ensuring that Striker Plate is flush with face and edge of stop.

   See Diagram 2

   or

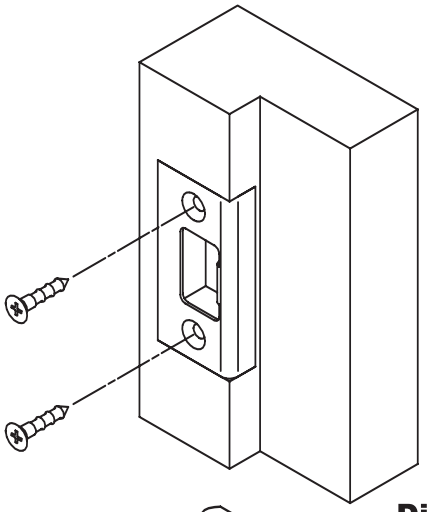

Diagram 2

3) For doors with rebated stiles mark position of Latchbolt on to second opening leaf. Prepare and fix Double Door Striker ensuring that tongue is flush with edge of stile.

   See Diagram 3

   NOTE: Notch for tongue must be cut through full thickness of rebate.

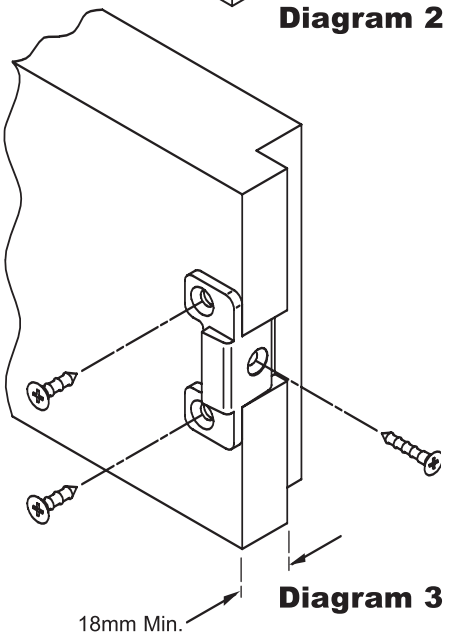

Diagram 3

4) Pull door into closed position ensuring that:
   a) Latchbolt retracts smoothly across Striker and fully engages.
   b) Depress Push Bar Lever or Push Pad to open door ensuring that Latchbolt retracts fully from Striker and permits opening without hindrance.

INSTALLATION OF PUSH PAD DEVICE IS NOW COMPLETE. CONTINUE FOR PUSH BAR DEVICE.

5) Fit End Box on hanging stile of door ensuring that it is vertical and level with Latch Box.

   See Diagram 4

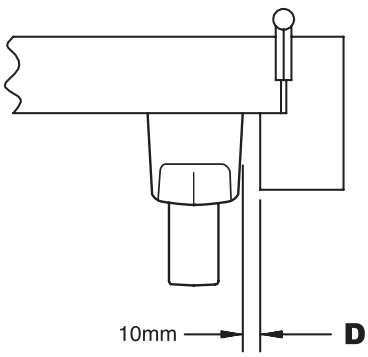

Diagram 4

9) Prepare head and threshhold for respective keepers.
Ensure that back edges of Top and Bottom Keepers are in line with rebate stop.
See Diagram 9 & 10

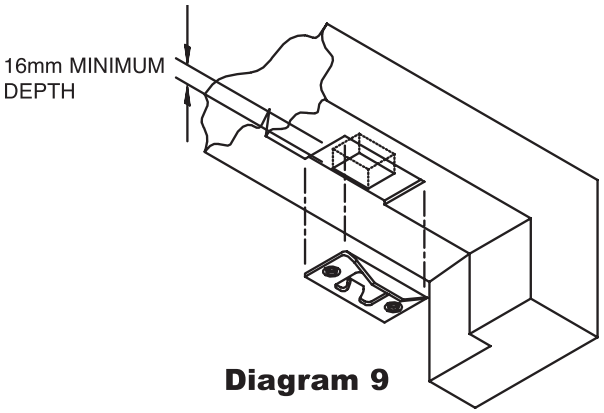

Diagram 9

10) Pull door into closed position and ensure:
a) that Top Tripper releases against Keeper Plate.
b) that both Shoots throw fully and enter their respective Keepers correctly.

11) Depress Push Bar Lever or Push Pad and ensure:
a) that both Shoots withdraw fully from their keepers.
b) that Top Tripper engages and retains Shoots in withdrawn condition.
c) that Shoots do not foul floor or head. Re-adjust if necessary.

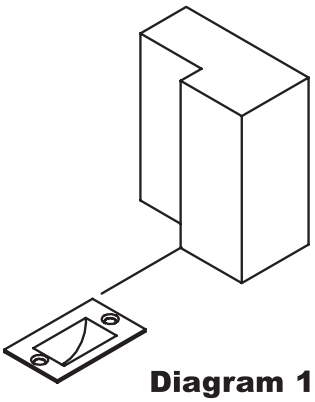
Diagram 10

INSTALLATION OF PUSH PAD DEVICE IS NOW COMPLETE. CONTINUE FOR PUSH BAR DEVICE.

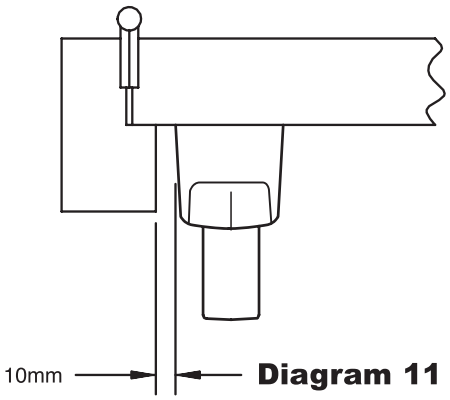

Diagram 11

12) Fit End Box on hanging stile of door ensuring that it is vertical and level with Bolt Box.
See Diagram 11

13) Accurately measure distance ‘C’ across Push Bar Levers, deduct the amount shown, and cut Push Bar to length.
See Diagram 12

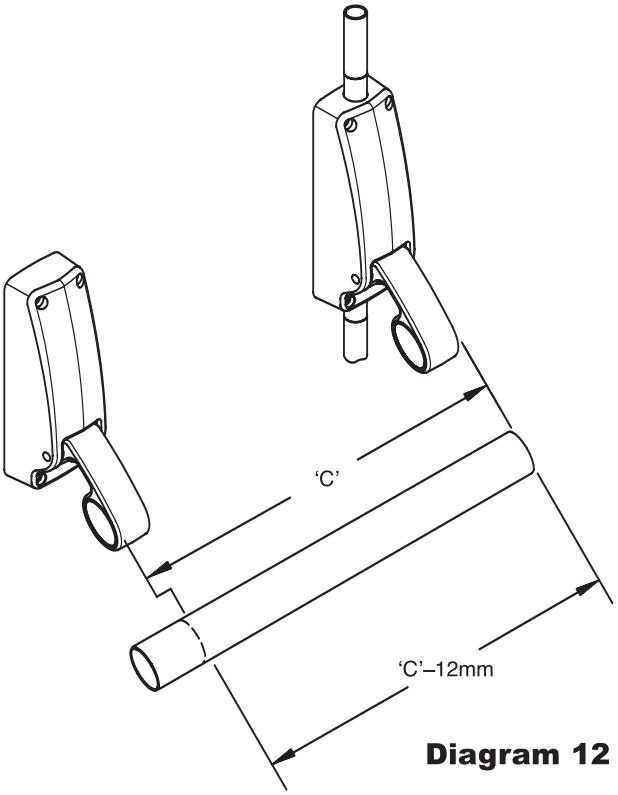

Diagram 12

14) Insert Push Bar into Levers, insert Plug into each end of Push Bar and flush with face of Levers. Secure Push Bar by tightening Clamp Screws on underside of Levers with Allen Key provided.

NOTE: These screws must be sufficiently tightened to give adequate rigidity of Push Bar.

See Diagram 13

15) Again test for correct operation as described in items 10 and 11.

16) Adhere green 'Push Bar to Open' sign immediately above the Push Bar.

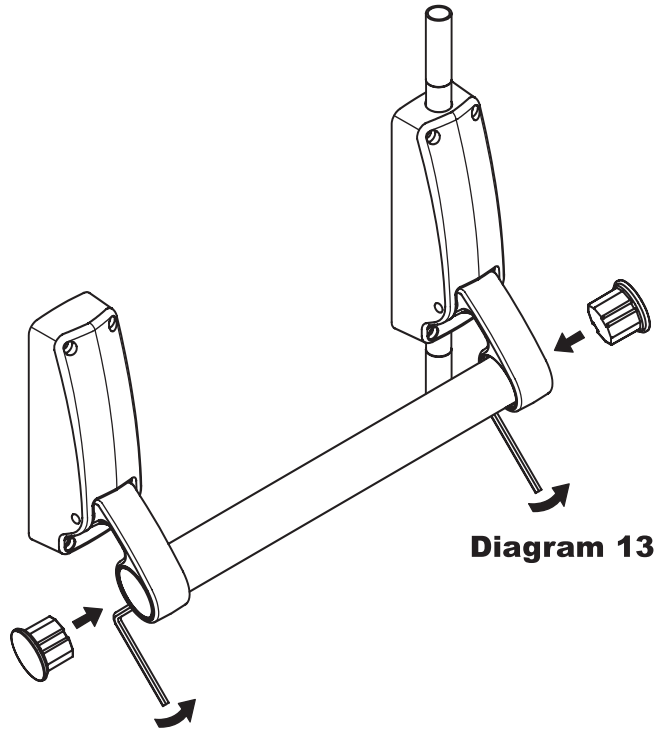

Diagram 13

OPERATIONAL INSTRUCTIONS

a) For device arrangements fitted to comply with EN 1125 no instruction of operation is needed for the end users as the device is easily operated by hand or body pressure in a panic situation.

b) For device arrangements fitted to comply with EN 179 it is recommended that the end users be instructed to operate the Push Pad devices using flat **palm** of the hand.

DOGGING DEVICE

Where provided, this device is incorporated in the End Box of Push Bar devices and enables the Shoots to be held in the withdrawn condition, allowing the door to be used as free-access when required. Installation is described in item 12.

To engage: depress Push Bar and push Dogging Lever towards door face.

To release: Pull Dogging Lever away from door face.

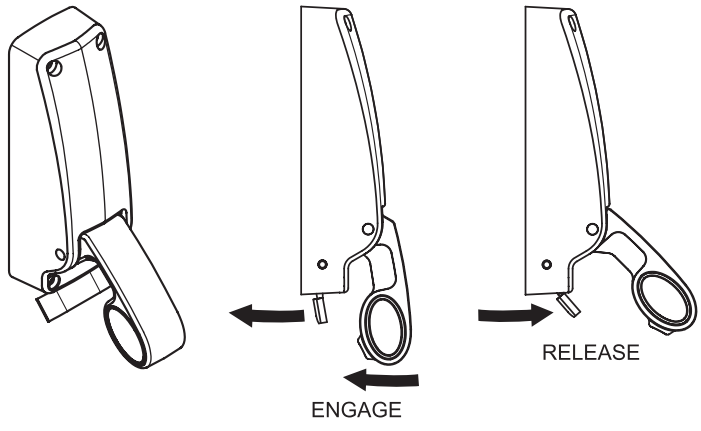

PRODUCT INFORMATION

- Category of projection: Category 2
- Field of door application: Category A
- Resistance of door leaf against pulling force of the recommended fixing screws: 1000N maximum achieved

ADDITIONAL INSTALLATION REQUIREMENTS

- Before installation ensure door and frame are in good condition, correctly hung and not distorted
  Note - Maximum door distortion of 5mm to ensure safe exit.

- It is not recommended that exit devices be fitted to hollow core doors unless specially designed for this type of door.

- It is recommended to verify that the door construction allows the use of the device, i.e. to verify that offset hinges and engaging leaves allow both leaves to be opened simultaneously, or to verify that the gap between door leaves does not differ from that defined by the exit device producer, or to verify that the opening elements do not interfere, etc.

- Before fitting an emergency exit device to a fire/smoke resisting door, the fire certification of the fire door assembly on which the exit device has been tested to prove suitability for use on a fire door should be examined. It is of utmost importance that an exit device is not used on a fire door assembly of a greater fire resistance time than approved for.

- Care should be taken to ensure that any seals or weather-stripping fitted to the complete door assembly does not inhibit the correct operation of the emergency exit device.

- On double door sets with rebated meeting stiles and where both leaves are fitted with emergency exit devices, it is essential to check that either leaf will open when its emergency exit device is activated and also that both leaves will open freely when both emergency exit devices are operated simultaneously.

- Category 2 (Standard projection) emergency exit devices should be used in situations where there is restricted width for escape, or where the doors to be fitted with the emergency exit devices are not able to open beyond 90°

- Different fixing can be necessary for fitting emergency exit devices to wood, metal or frameless glass doors. For more secure fixing, male and female through-door bolts, reinforcement and rivets can be used.

- These exit devices are not intended for use on double action (double swing) doors.

- These fixing instructions should be carefully followed during installation.
  These instructions and any maintenance instructions should be passed on by the installer to the user.

- When installing lever operating emergency exit devices, particularly on doors with raised or recessed surfaces, consideration should be given to minimizing any potential safety risks, such as the trapping of fingers or clothing.

- The bolt heads and keepers should be fitted to provide secure engagement. Care should be taken to ensure that no projection of the bolt heads, when in the withdrawn position, can prevent the door swinging freely.

- Where emergency exit devices are to be fitted to double doorsets with rebated meeting stiles and self closing devices, a door coordinator device in accordance with EN 1158 should be fitted to ensure the correct closing sequence of the doors.
  This recommendation is particularly important with regard to smoke/fire-resisting door assemblies.

- No devices for securing the door in the closed position should be fitted other than specified in EN 1125 / EN 179.
  This does not preclude the installation of self-closing devices.

- If a door closing device is to be used to return the door to the closed position, care should be taken not to impair the use of the doorway by the young, elderly and infirm.

- Where applicable, the “Push to open” sign should be applied on the inside face of the door immediately above the operating element.

MAINTENANCE INSTRUCTIONS

To ensure performance in accordance with the relevant standard, the following routine maintenance checks should be undertaken at intervals of not more than one month.

a) Inspect and operate the emergency exit device to ensure that all components are in a satisfactory working condition.
Using a force gauge, measure and record the operating forces to release the exit device.

b) Ensure that the keepers are clean and free from obstruction

c) Check that the emergency exit device is lubricated if required.

d) Check that no additional locking devices have been added to the door since its original installation.

e) Check periodically that all components of the system are still correct in accordance with the list of approved components originally supplied with the system.

f) Check periodically that the operating element is correctly tightened and, using a force gauge, measure the operating forces to release the exit device.
Check that the operating forces have not changed significantly from the operating forces recorded when originally installed.

g) Check that all fixing screws are tight.

These instructions should be passed on by the installer to the user on completion of installation.

Additional accessories approved for use with this product

- 1413E Outside access device
- 376FFKP Flush face keeper
- 376MDS Metal door strike