## TECHNICAL DATA SHEET

This range of ECO LED beacons is a cost effective solution for local signalling applications where long life and low maintenance are required. The unit incorporate 8 off Surface Mount LED's giving 360 degree light output around the vertical axis.

| Part Code: | Voltage: | Light Source: | Current: |
|---|---|---|---|
| LED100-01 | 10-17 v Ac/Dc⎓~ | 8 SMT LEDs | 430mA @12v Dc |
| LED100-02 | 20-30v Ac/Dc⎓~ | 8 SMT LEDs | 110mA @ 24v Dc |
| LED100-03 | 35-85v Ac/Dc⎓~ | 8 SMT LEDs | 76mA @ 48v Dc |
| LED100-05 | 85-380v Dc ---<br>85-280v Ac ~ | 8 SMT LEDs | 35mA @ 230v Ac |

For Lens colours add: 01 Amber, 02 Red and 04 Green

### Key Features include:

- Ingress Protection: IP65
- Operating Temperature Range: -25 +55$^0$C
- Enclosure Materials: UV Stable Polycarbonate Lens. UV Stable ABS Base.
- AC Supply: 50/60 Hz

### Cabling Details:

Will accept shrouded cable up to 5.5mm in diameter.
Base aperture can be enlarged to accept larger diameters.
Maximum 1.5mm$^2$ (14 – 22 AWG) stranded core with 4mm cut back.

### Optional Equipment:

- 50003 Cage Guard (fixings supplied)
- 50007 Right Angled Wall Bracket

Note: Guard cannot be used in conjunction with bracket.



MOFLASH SIGNALLING

# INSTALLATION & TECHNICAL INFORMATION

PLEASE READ PRIOR TO INSTALLATION



## LED100 Series - (LED Array)

VISUAL SIGNALLING DEVICES

APPROVALS AND CONFORMITIES

**Website: www.moflash.com** **Email: technical@moflash.co.uk**

**INSTALLATION DATA SHEET**

**LED100 Series**

If supplied with lens pre-fitted, remove the 2 x M4 screws that secure the lens to the base. Remove the 2 x No:4 screws that secure inner PCB LED assembly. Carefully remove the PCB assembly, being aware that if the unit is of the audible type, the piezo buzzer wiring will be connected to the underside of PCB via a terminal block.

Select jumper link position on PCB, required for control functionality (see cable connection below and diagram 1). Insert power cable through aperture in base & connect to PCB terminal block according to the control functionality required (see cable connection). Place PCB assembly into base noting the position of the internal mounting lugs. Fix the PCB onto the lugs using the 2 x No:4 screws supplied.

Fix the base to the required surface using 2 x M4 screws (not supplied). Make sure that the base 'O' ring is in position before re-fitting the lens to the base. Ensure the two lens screws are tightened fully and that a good all round seal is made between the base and lens.

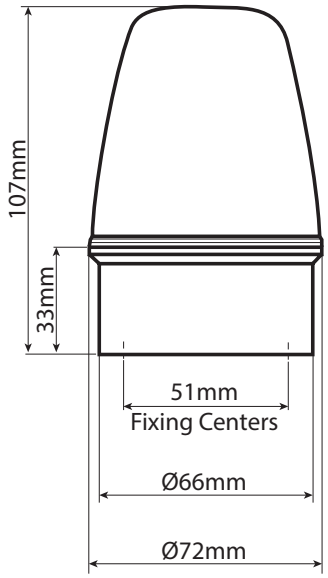


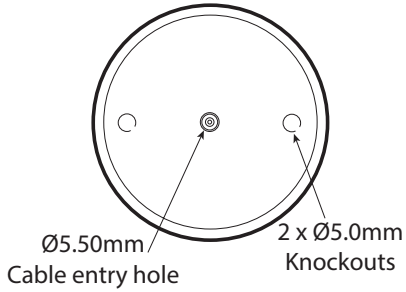


**Cable Connection**

The Eco range has been designed to offer two stage alarm functionality. A jumper link on the PCB (see diagram 1) pre-sets the unit to either static mode (permanently on) or flashing made, once the unit is energised. With the jumper link in place, the unit is in flash mode only. If the jumper link is removed the unit is in static mode.

An additional third wire option on the terminal block (SIG), once triggered, can switch the beacon into flash mode. If the unit is fitted with an audible option, it will be automatically synchronised with the mode of operation. (Please ensure the Jumper Link is removed if you wish to utilise the third wire option)

**General Installation Notes**

- Installation must be carried out in accordance with the latest codes & regulations by a qualified electrician
- Ensure power is disconnected prior to installation or maintenance
- Environmental exposure conditions during installation should be dry, not moist or wet
- The lens of the unit is polycarbonate plastic. Do not clean with petroleum based cleaners
- For all installations, mount the beacon with the lens above the base. Any other mounting position will impair the IP rating (Ingress Protection) of the unit
- Avoid mounting the beacon where it will be subject to excessive vibration.




**The above image shows the 115/230vAC PCB and is for illustration purposes only.**

**Diagram 1**

