NEW

PTS645V Series
6 mm SMT Side Actuated Tact Switch

Features/Benefits

- ***Full SMT processing***
- ***Strong PCB soldering pads***
- ***Compact 6 x 6 mm design***

Typical Applications

- ***Consumer Products***
- ***Set Top and Access Boxes***
- ***Instrumentation***
- ***Home and Garden Equipment***



Specification

FUNCTION: Momentary action
CONTACT ARRANGEMENT: 1 make contact = SPST, N.O.
TERMINALS: G type for SMT
TRAVEL: PTS645V: 0.25 +0.2/-0.1 mm
PTS645VS: 0.35 +0.2/-0.1mm
OPERATING LIFE: 100,000 cycles

Mechanical

Part Number	Operating Force (gf)	Actuator Color
PTS645VN13SMTR92 LFS	100	Dark Grey
PTS645VM13SMTR92 LFS	160	Yellow Green
PTS645VSN19PSMTR92 LFS	100	Grey
PTS645VSM19PSMTR92 LFS	160	Black
PTS645VSK19PSMTR92 LFS	260	Red
PTS645VSP19PSMTR92 LFS	320	Yellow

Electrical

MAXIMUM VOLTAGE: 12 V DC
MAXIMUM CURRENT: 50 mA
DIELECTRIC STRENGTH: 100 V AC (1mn)
CONTACT RESISTANCE: ≤ 100 mΩ
INSULATION RESISTANCE: ≥ 100 MΩ
BOUNCE TIME: ≤ 10 ms

Environmental

OPERATING TEMPERATURE: -40°C to 85°C
STORAGE TEMPERATURE: -40°C to 85°C

Process

SOLDERING: This component is suited to the following methods:
Infrared Reflow Soldering in accordance with IEC61760-1

Recommended solder paste thickness is ≥ 15µm

Packaging

In reels of 650 pieces
Dimensions of reels according to EIA 481B
External diameter 330 mm

NOTE:

- Specifications listed above are for switches with standard options. For information on specific and custom switches, consult Customer Service Center.
- **The PTS series is not certified for using in Automotive application and no PPAP. However, in the case of some automotive accessories and specific applications for 2 and 3 wheeled vehicles the PTS is widely used and very suitable. Please contact your local C&K representative to discuss your application and the best switch solution.**

How To Order

Our easy build-a-switch concept allows you to mix and match options to create the switch you need. To order, select desired option from each category and and place it in the appropriate box.

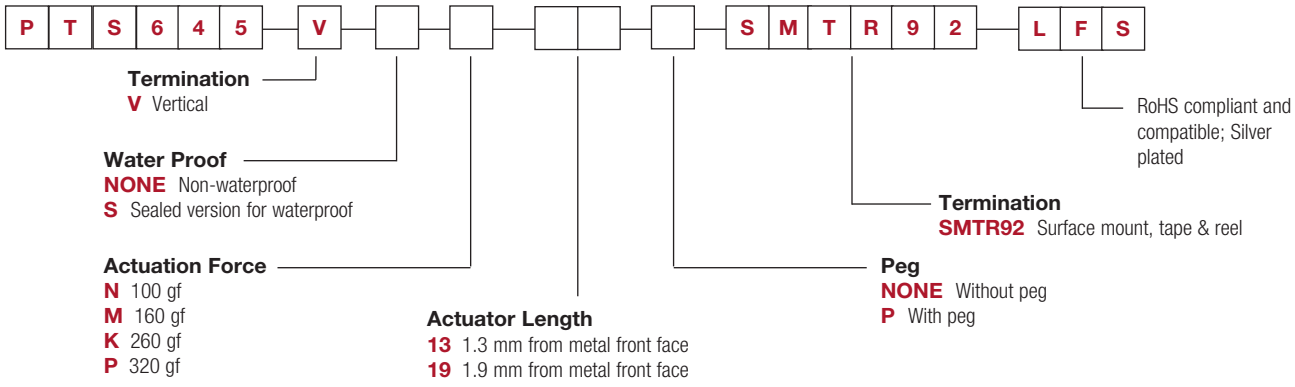

* Sealed version with IP67 is currently only for 1.9mm actuator length.
For other lengths, please contact your local C&K representative.

PTS645V Series
6 mm SMT Side Actuated Tact Switch

NEW

STANDARD VERSION WITHOUT PEG

RECOMMENDED PCB LAYOUT

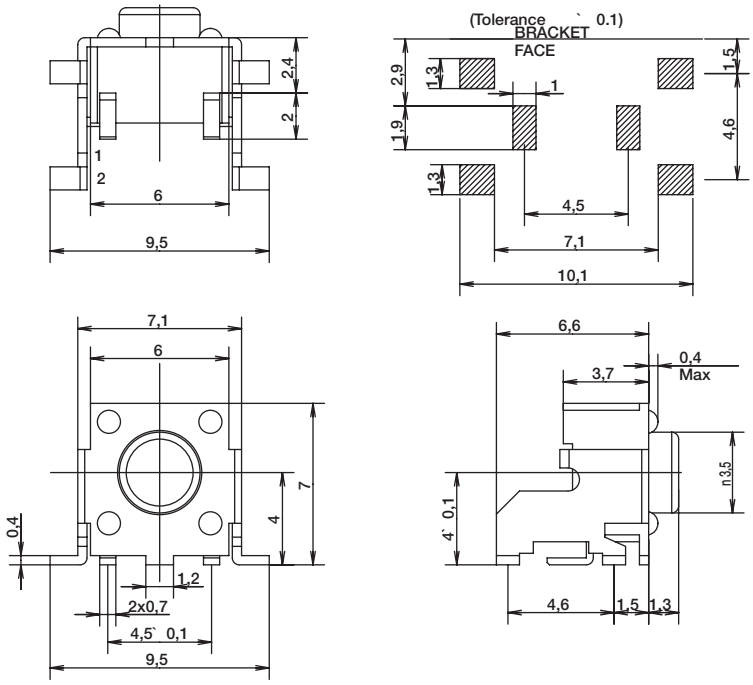

SCHEMATIC

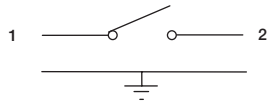

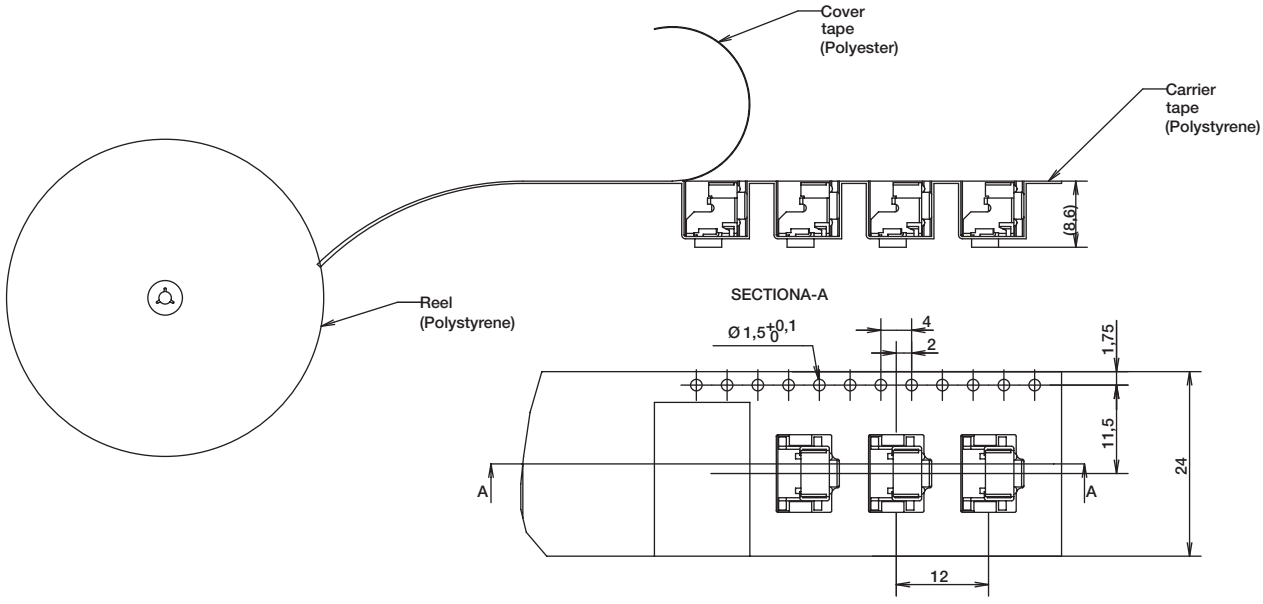

PTS645V Series
6 mm SMT Side Actuated Tact Switch

NEW

VERSION WITH PEG

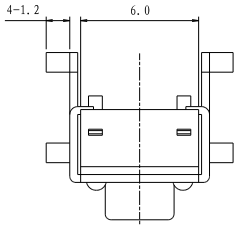

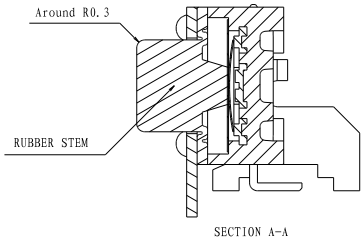

P.C.B SOLDER LAND DIMENSIONS

(P.C.B permissible tolerance : ±0.1)

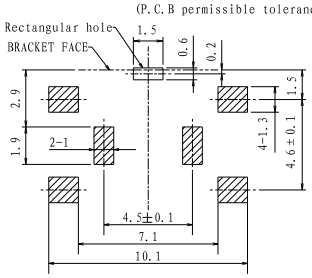

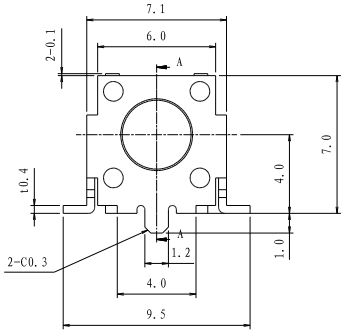

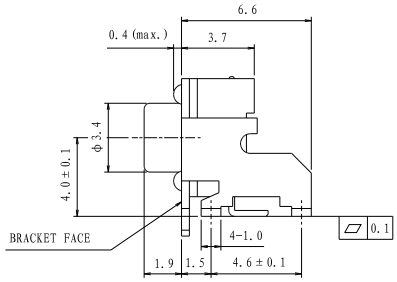

CIRCUIT DIAGRAM

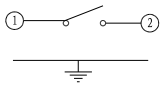

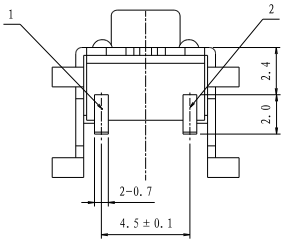

PACKAGE

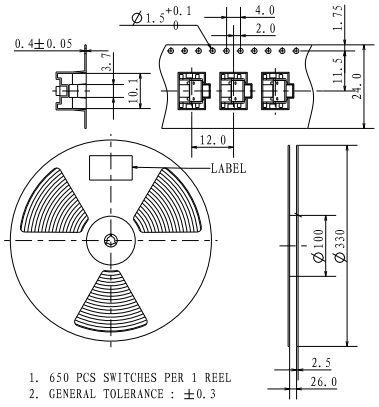

1. 650 PCS SWITCHES PER 1 REEL
2. GENERAL TOLERANCE : ±0.3