# Product data sheet
## Characteristics

# XMLP1K0PP730
pressure transmitter - XMLP - 1000psi - 1/4"18NPT - 0..10V - Packard - set 1




## Main

| | |
|---|---|
| Range of product | OsiSense XM |
| Product or component type | Electronic pressure sensors |
| Pressure sensor type | Pressure transmitter |
| Pressure sensor name | XMLP |
| Electrical circuit type | Control circuit |
| Pressure sensor size | 1000 psi |
| Local display | Without |
| Controlled fluid | Fresh water 0...135 °C<br>Air -40...135 °C<br>Hydraulic oil -40...135 °C<br>Gas -40...135 °C<br>Refrigeration fluid -40...135 °C |
| Fluid connection type | 1/4" - 18 NPT (male) |
| Electrical connection | 1 male connector Packard Metripack 150 3 pins |
| [Us] rated supply voltage | 24 V DC SELV, voltage limits: 12...33 V |
| Current consumption | < 7 mA |
| Type of output signal | Analogue |
| Analogue output function | 0...10 V, 3-wire |
| Quantity per set | Set of 1 |
| Type of packing | Individual |

## Complementary

| | |
|---|---|
| Pressure setting range | 0...1000 psi |
| Maximum permissible accidental pressure | 3000 psi |
| Destruction pressure | 6000 psi |
| Materials in contact with fluid | Stainless steel AISI 316L |
| Operating position | Any position |
| Protection type | Reverse polarity |

Disclaimer: This documentation is not intended as a substitute for and is not to be used for determining suitability or reliability of these products for specific user applications

| | |
|---|---|
| | Load short-circuit |
| Electromagnetic compatibility | 1.2/50 µs shock waves immunity test conforming to EN/IEC 61000-4-5 - test level 1 kV (f = 42 Ohm)<br>Immunity to magnetic fields conforming to EN/IEC 61000-4-8 - test level 100 A/m (f = 50 Hz)<br>Susceptibility to electromagnetic fields conforming to EN/IEC 61000-4-3 - test level 10 V/m (f = 80...3000 MHz)<br>Radiated RF fields conforming to EN/IEC 61000-4-6 - test level 10 V (f = 0.01...80 MHz)<br>Electrical fast transient/burst immunity test conforming to EN/IEC 61000-4-4 - test level 2 kV<br>Electrostatic discharge immunity test conforming to EN/IEC 61000-4-2 - test level 8 kV air, 4 kV contact |
| [Uimp] rated impulse withstand voltage | 0.5 kV |
| Response time on output | <= 2 ms for 10...90 % of full scale |
| Measurement accuracy | +/- 0.5 % of the measuring range |
| Accuracy | 0.1 % of the measuring range |
| Drift of the sensitivity | +/- 0.02 % of measuring range/°K |
| Drift of the zero point | +/- 0.02 % of measuring range/°K |
| Mechanical durability | >= 10000000 cycles |
| Product weight | 0.09 kg |
| Diameter | 26 mm |
| Length | 55 mm |

## Environment

| | |
|---|---|
| Standards | EN/IEC 61326-2-3<br>NSF ANSI 61 |
| Product certifications | CE<br>EAC<br>cULus<br>RCM |
| Protective treatment | TC |
| Ambient air temperature for operation | -30...85 °C |
| Ambient air temperature for storage | -50...100 °C |
| Vibration resistance | 20 gn (f = 15...2000 Hz) conforming to EN/IEC 60068-2-6 |
| Shock resistance | 100 gn for 11 ms conforming to EN/IEC 60068-2-27 |
| IP degree of protection | IP65 conforming to EN/IEC 60529<br>IP67 conforming to EN/IEC 60529 |

## Offer Sustainability

| | |
|---|---|
| Sustainable offer status | Green Premium product |
| RoHS (date code: YYWW) | Compliant - since 1723 - Schneider Electric declaration of conformity<br>Schneider Electric declaration of conformity |
| REACh | Reference not containing SVHC above the threshold<br>Reference not containing SVHC above the threshold |
| Product environmental profile | Available |
| Product end of life instructions | Need no specific recycling operations |

# XMLP1K0PP730

## Dimensions

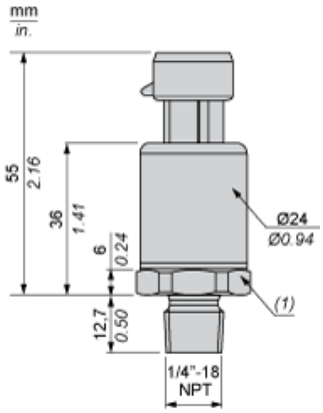


(1) SW24 tightening torque ≤ 25 N.m / 221 lb-in

## Wiring Diagram

### 3-Wire Technique (0-10 V)

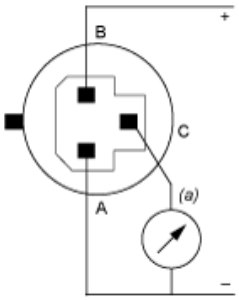


(a) V out

# XMLP1K0PP730

## Curves

