E43339

O-ring

O-RG 6,50x1,50/FKM/70/SW

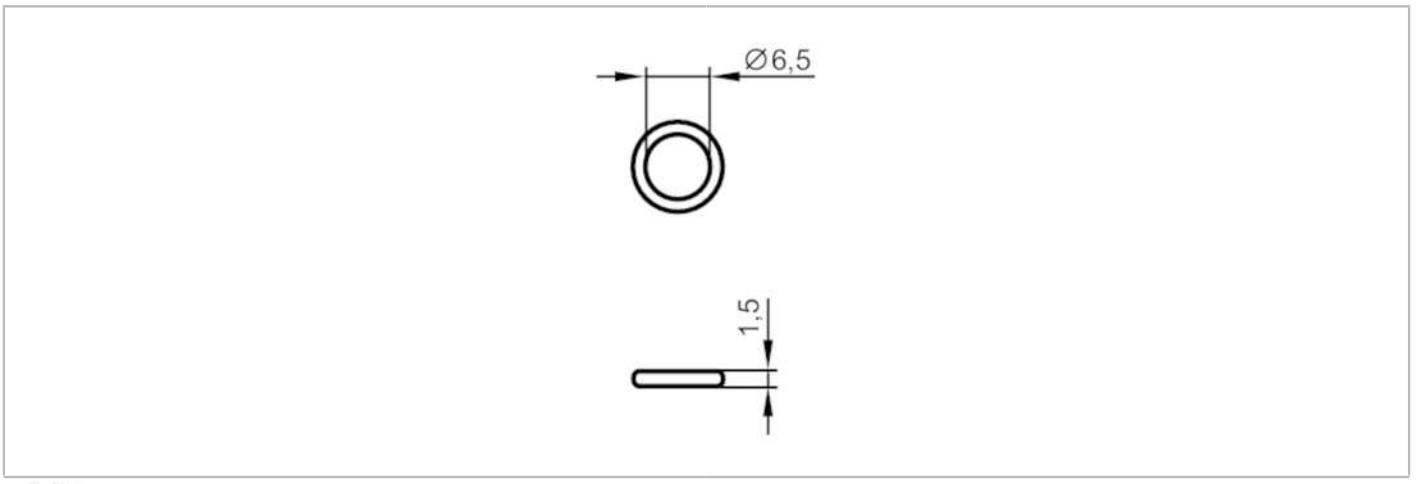

EC 1935/2004

Mechanical data		
Weight	[g]	0.75
Inside diameter	[mm]	6.5
External diameter	[mm]	9.5
Materials		FKM
Remarks		
Pack quantity		1 pcs.