Product Data Sheet **9293510737**
VWCE119PKGLS
4318 N/2N

ebmpapst

engineering a better life



4318 N/2N

INDEX

1 General 3
2 Mechanics 3
2.1 General 3
2.2 Connections 3
3 Operating Data 4
3.1 Electrical Operating Data 4
3.2 Electrical Interface - Output 5
3.3 Electrical Features 6
3.4 Aerodynamics 7
3.5 Sound Data 8
4 Environment 8
4.1 General 8
4.2 Climatic Requirements 8
4.3 Mechanical Requirements 9
5 Safety 10
5.1 Electrical Safety 10
5.2 Approval Tests 10
6 Reliability 10
6.1 General 10

1 General

Fan type	Axial	
Rotating direction looking at rotor	Clockwise	
Airflow direction	Air outlet over struts	
Bearing system	Ball bearing	
Mounting position - shaft	Any	

2 Mechanics

2.1 General

Width	119,0 mm	
Height	119,0 mm	
Depth	32 mm	
Mass	0,23 kg	
Housing material	Plastic	
Impeller material	Plastic	
Max. torque when mounted across both mounting flanges Screw size	Wire outlet corner: 80 Ncm Remaining corners: 80 Ncm ISO 4762 - M4 degreased, without an additional brace and without washer	
Rotor protrusion max.	0,4 mm	

2.2 Connections

Electrical connection	Wires	
Lead wire length Tolerance	L = 310 mm +- 10,0 mm	



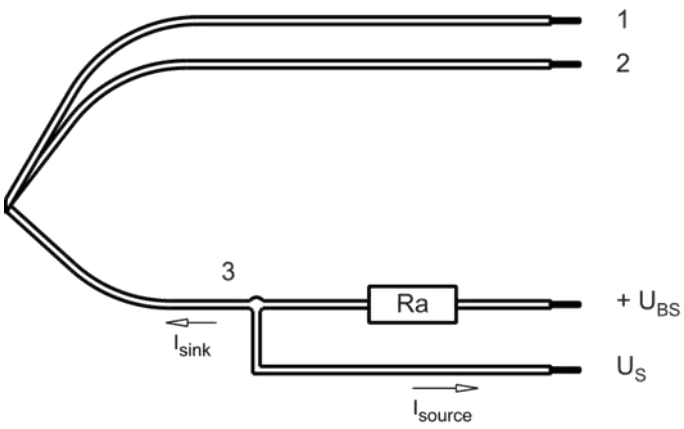

Wire	Color	Operation	Wire size	Insulation diameter
1	red	+ UB	AWG 24	1,5 mm
2	blue	- GND	AWG 24	1,5 mm
3	white	Tacho	AWG 24	1,5 mm

3 Operating Data

3.1 Electrical Operating Data

Measurement conditions: Normal air density = 1,2 kg/m3; Temperature 23°C +/- 3°C; Motor axis horizontal; warm-up time before measuring 5 minutes (unless otherwise specified). In the intake and outlet area should not be any solid obstruction within 0,5 m.

Δp = 0: corresp. to free air flow (see chapter aerodynamics)
I: corresp. to arithm. mean current value

Features	Condition	Symbol	Values		
Voltage range		U	36 V		60 V
Nominal voltage		U_N		48 V	
Power consumption Tolerance	Δp = 0 0010	P	2,3 W +- 17,5 %	4,3 W +- 12,5 %	6,9 W +- 15 %
Current consumption Tolerance	Δp = 0 0010	I	65 mA +- 17,5 %	90 mA +- 12,5 %	115 mA +- 15 %
Speed Tolerance	Δp = 0 0010	n	2.200 1/min +- 12,5 %	2.700 1/min +- 7,5 %	3.150 1/min +- 10 %
Starting current consumption				400 mA	

3.2 Electrical Interface - Output

Tacho type	/2 (open collector)

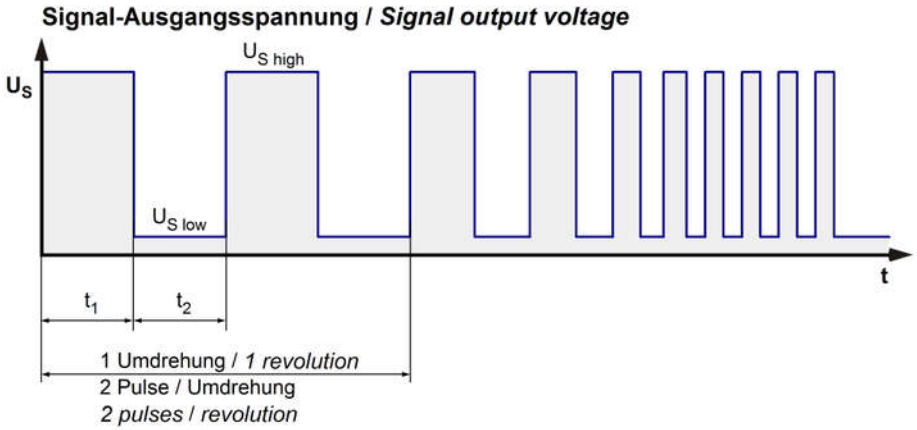

$$Ra = \frac{U_{BS} - U_{S\,low}}{I_{sink}}$$

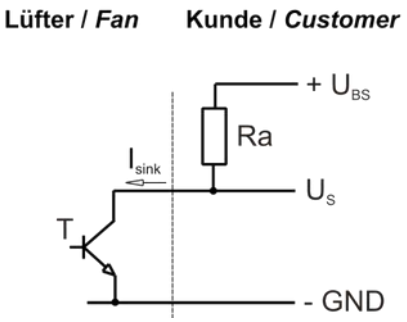

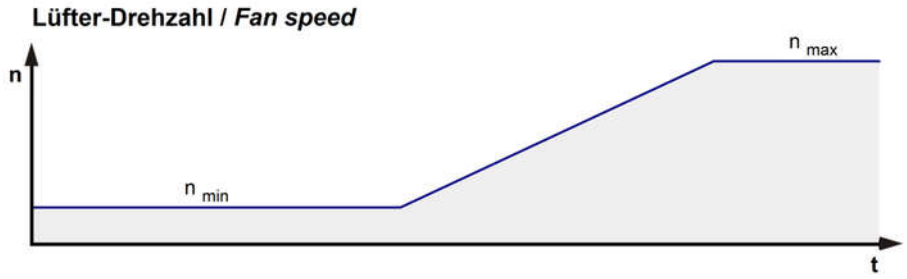

Features		Note	Values
Tacho operating voltage	U_{BS}		<= 30 V
Tacho signal Low	$U_{S\,low}$	I sink: 2 mA	<= 0,4 V
Tacho signal High	$U_{S\,high}$	I source: 0 mA	<=30 V
Maximum sink current	I_{sink}		<= 4 mA
External resistor		External resistor Ra from UBS to US required. All voltages measured to GND.	
Tacho frequency		(2 x n) / 60	
Tacho isolated from motor		No	
Slew rate			=> 0,5 V/us

n = revolutions per minute (1/min)

3.3 Electrical Features

Electronic function	None	
Reversed polarity protection Max. residual current at U_N	Rectifying diode I_F < 100 uA	
Locked rotor protection	Auto restart	
Locked rotor current at U_N	I_{block} approx. 400 mA	
Clock signal at locked rotor	t_3 / t_4 typical: 0,6 s / 10 s	

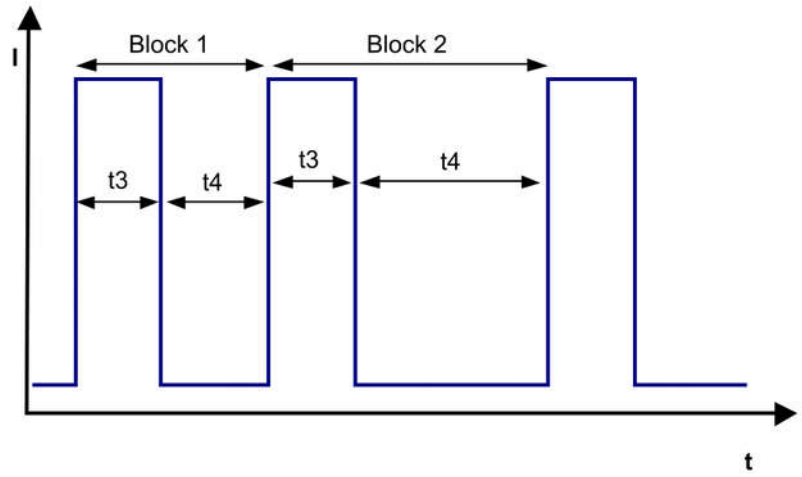

Block1: special locked rotor protection: 5 cycles t3 / t4 = 0,6 s / 1 s Block2: locked rotor protection t3 / t4 = 0,6 s / 10 s

3.4 Aerodynamics

Measurement conditions:	Measured with a double chamber intake rig acc. to DIN EN ISO 5801. Normal air density = 1,2 kg/m3; Temperature 23°C +/- 3°C; In the intake and outlet area should not be any solid obstruction within 0,5 m. Motor shaft horizontal. The information is only valid under the specified test conditions and may be changed by the installation conditions. If there are deviations from the standard test conditions, the characteristic values must be checked under the installed conditions. Power consumption of the fan motor when operating at normal voltage is shown. Depending on the operating conditions of the application, the power input may be higher.

a.) Operation condition:

2.700 1/min at free air flow

Max. free-air flow (Δp = 0 / $\dot{V}$ = max.)	187 m3/h	
Max. static pressure (Δp = max. / $\dot{V}$ =0)	66 Pa	

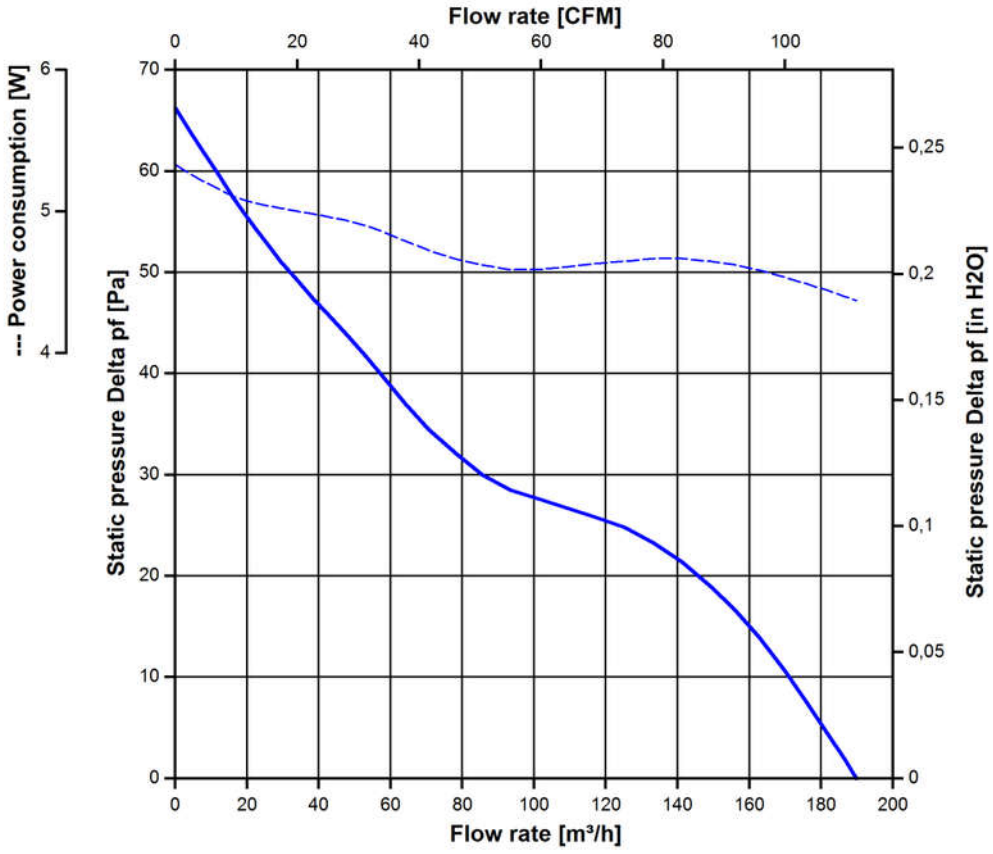

3.5 Sound Data

Measurement conditions:	Sound pressure level: 1 meter distance between microphone and the air intake. Sound power level: Acc. to DIN 45635 part 38 (ISO 10302) Measured in a semianechoic chamber with a background noise level of Lp(A) < 5 dB(A) For further measurement conditions see chapter aerodynamics.

a.) Operation condition:

2.700 1/min at free air flow

Optimal operating point	138 m3/h @ 22 Pa	
Sound power level at the optimal operating point	5,4 bel(A)	
Sound pressure level at free air flow, measured in rubber bands	43 dB(A)	

4 Environment

4.1 General

Min. permitted ambient temperature TU min.	-20 °C	
Max. permitted ambient temperature TU max.	75 °C	
Min. permitted storage temperature TL min.	-40 °C	
Max. permitted storage temperature TL max.	80 °C	

4.2 Climatic Requirements

Humidity requirements	humid heat, constant; according to DIN EN 60068-2-78, 14 days	
Water exposure	None	
Dust requirements	None	
Salt fog requirements	None	

Permitted application area:
The product is intended for use in sheltered rooms with controlled temperature and controlled humidity. Directly exposure to water must be avoided.

Pollution degree 1 (according DIN EN 60664-1)
There is either no pollution or it occurs only dry, non-conductive pollution. The pollution has no negative impact.

4.3 Mechanical Requirements

severity level	Vibration (sinusoidal)	
0,5 G	Vibration (sinusoidal) in use IEC 60068-2-6 Displacement / frequency range Acceleration / frequency range Sweep rate Sweep cycles Duration Axes of vibration	 Vibration (sinusoidal) 0,035 mm / 10-60, 60-10 Hz 0,5 G / 60-500-60 Hz 1 Oct./min 10 2 hrs. 3

severity level	stationary use		
1	storage / transportation	Random vibration not in use IEC 60068-2-64 Frequency range / ASD G_{RMS} Axes of vibration Test duration	 Random vibration 5 - 20 Hz : 1,0 m^2 / s^3 20 - 500 Hz : - 3 dB / Oct 0,91 G 3 3 x 5 h
	storage / transportation	Bump not in use IEC 60068-2-29 Shock spectrum Acceleration Duration Number of bumps (+X, -X, -Y, +Y, -Z, +Z) Total bumps	 Bump half sine 18 G 6 ms 100 in each direction 600
	stationary use	Random vibration in use IEC 60068-2-64 Frequency range / ASD G_{RMS} Axes of vibration Test duration	 Random vibration 5 - 20 Hz : 2,0 m^2 / s^3 20- 150 Hz : - 3 dB / Oct 0,83 G 3 3 x 5 h
	stationary use	Bump in use IEC 60068-2-29 Shock spectrum Acceleration Duration Number of bumps (+X, -X, -Y, +Y, -Z, +Z) Total bumps	 Bump half sine 5 G 11 ms 100 in each direction 600

5 Safety

5.1 Electrical Safety

Dielectric strength DIN EN 62368 and DIN EN 60335 A.) Type test Measuring conditions: After 48h of storage at 95% R.H. and 25°C. No arcing or breakdown is allowed! All connections together to ground. B.) Routine test Measuring conditions: At indoor climate. No arcing or breakdown is allowed! All connections together to ground.	500 VAC / 1 Min. Not applicable	
Isolation resistance Measuring conditions: After 48h of storage at 95% R.H. and 25°C measured with U=500 VDC for 1 min.	RI > 10 MOhm	
Clearance / creepage distance	1,0 mm / 1,5 mm	
Protection class	III	

5.2 Approval Tests

CE	EC Declaration of Conformity	Yes
EAC	Eurasian Conformity	Yes
UL	Underwriters Laboratories	Yes / UL507, Electric Fans E38324
VDE	Association for Electrical, Electronic and Information Technologies	Yes / Approval acc. to EN 62368 - Audio/video, information and communication technology equipment
CSA	Canadian Standards Association	Yes / C22.2 No. 113 Fans and Ventilators
CCC	China Compulsory Certification	Yes / GB 12350 Safety Requirements for small Power Motors

6 Reliability

6.1 General

Life expectancy L10 at TU = 40 °C	75.000 h	
Life expectancy L10 at TU max.	30.000 h	
Life expectancy L10 acc. to IPC 9591 at TU = 40 °C	127.500 h	

The reproduction, distribution and utilization of this document as well as the communication of its contents to others without express authorization is prohibited. Offenders will be held liable for the payment of damages. All rights reserved in the event of the grant of a patent, utility model or design. Refer to protection notice ISO 16016!
Note: In case of multilingual information in this document and in the applicable documents referred to in this document, only the English version shall be authoritative and legally binding in the event of contradictions in content.

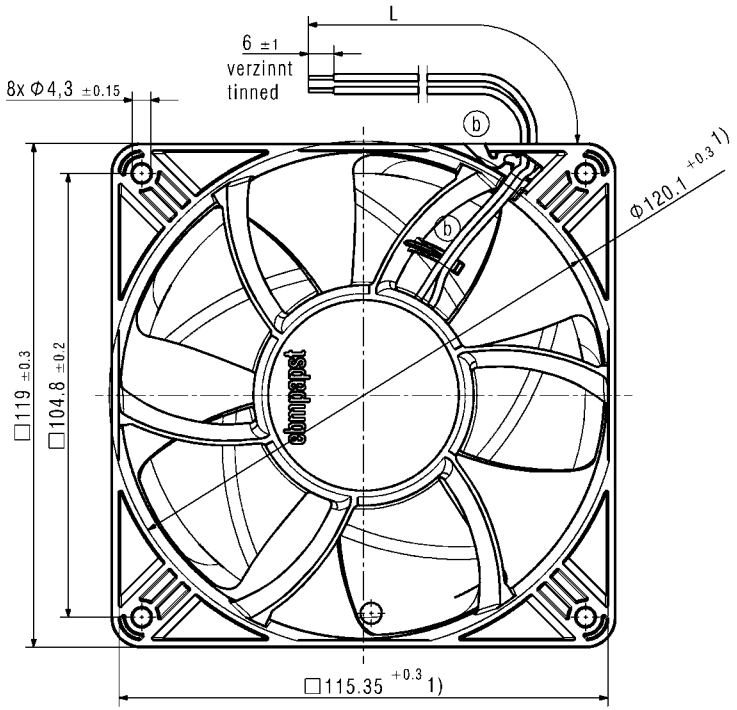

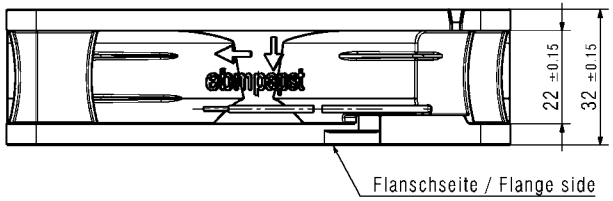

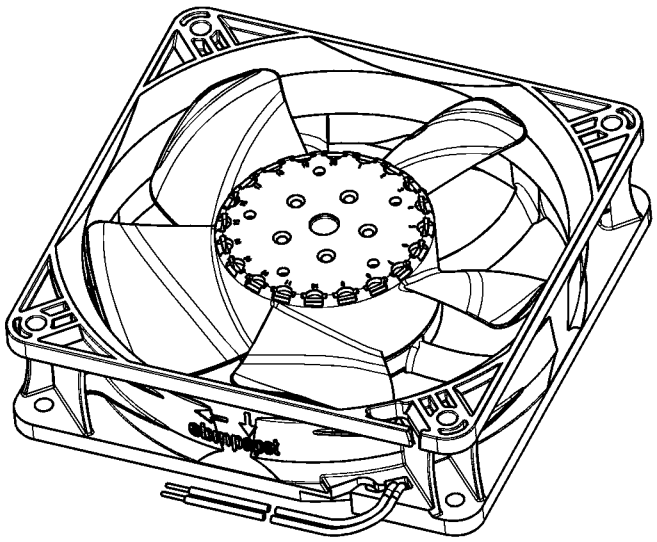

1) Maße für Montagewand / Dimensions for assembly wall

- Kein Axialspiel der Kugellager durch Federausgleich /
  No axial clearance of the ball bearings due to a pre-load spring
- Anzahl und Länge der Litzen siehe Produktspezifikation
  Number and length of the wires see product specification

Title				Material	Digital signature
First created for		Index B	Doc type	Sheet	Change-No
		Designed name		Designed date	Volume [mm³] / CAD environment
Substitute for		Released name		Released date	Mass [g] / CAD release
ebmpapst ebm-papst St. Georgen GmbH & Co. KG		Tolerances		General tolerances	3D-reference model 9293510701 CPR 000 D
	Scale	Format	Document status		