TI01508P/00/EN/09.25-00
71695927
2025-02-12

Technical Information
Cerabar PMP51B

Process pressure and level measurement in liquids or gases





Digital pressure transmitter with metallic process membrane

Applications

- Pressure measuring ranges: up to 400 bar (6 000 psi)
- Process temperatures: up to 400 °C (752 °F) with diaphragm seal
- Accuracy: up to ±0.055%

Advantages

The new Cerabar generation introduces a robust pressure transmitter that combines numerous benefits: Easiest local or remote operation, allows condition-based maintenance and offers smart safety in processes. The firmware is designed to ensure extremely easy handling. Intuitive and clear wizard navigation guides the user through the commissioning and verification of the device. The Bluetooth connectivity provides safe and remote operation. The large display guarantees excellent readability.

Endress+Hauser
People for Process Automation

Table of contents

About this document 4
Symbols 4
List of abbreviations 5
Turn down calculation 5

Function and system design 6
Measuring principle 6
Measuring system 7
Communication and data processing 8
Dependability for devices with HART, Bluetooth, PROFINET with Ethernet-APL 8

Input 10
Measured variable 10
Measuring range 10

Output 12
Output signal 12
Signal on alarm 12
Load 12
Damping 13
Ex connection data 13
Linearization 13
Protocol-specific data 13
Wireless HART data 15

Power supply 16
Terminal assignment 16
Available device plugs 16
Supply voltage 18
Electrical connection 19
Potential equalization 19
Terminals 19
Cable entries 19
Cable specification 19
Overvoltage protection 20

Performance characteristics 21
Response time 21
Reference operating conditions 21
Total performance 21
Resolution 23
Total error 23
Long-term stability 24
Response time T63 and T90 24
Installation factors 25
Warm-up time (according to IEC62828-4) 25

Mounting 26
Orientation 26
Installation instructions 26
Installation instructions for devices with diaphragm seals . . 26
Sensor selection and arrangement 27
Special mounting instructions 28

Environment 30
Ambient temperature range 30
Storage temperature 30
Operating altitude 30
Climate class 30
Atmosphere 31
Degree of protection 31
Electromagnetic compatibility (EMC) 31

Process 32
Process temperature range 32
Process pressure range 35
Ultrapure gas applications 35
Hydrogen applications 35
Steam applications and saturated steam applications 35
Thermal insulation 35

Mechanical construction 39
Design, dimensions 39
Dimensions 41
Weight 60
Materials in contact with process 61
Materials not in contact with process 61
Accessories 63

Display and user interface 64
Operating concept (not for devices with 4 to 20 mA analog) 64
Local operation 64
Local display 65
Remote operation 66
System integration 67
Supported operating tools 67

Certificates and approvals 68
CE mark 68
RCM-Tick marking 68
Ex approvals 68
Corrosion test 68
EAC conformity 68
Drinking water approval 68
Overfill protection (in preparation) 68
Functional safety SIL/ IEC 61508 Declaration of Conformity (optional) 68
Marine approval 69
Radio approval 69
CRN approval 69
Test reports 69
Pressure Equipment Directive 2014/68/EU (PED) 69
Oxygen application 70
China RoHS symbol 70
RoHS 70
Certification PROFINET with Ethernet-APL 70
Additional certification 70

Ordering information 72
Ordering information 72
Scope of delivery 72
Service 72
Measuring point (tag) 72

Test reports, declarations and inspection certificates 73

Accessories 74
Device-specific accessories 74
Device Viewer 74

Documentation 75
Standard documentation 75
Supplementary device-dependent documentation 75
Field of Activities 75
Special Documentation 75

Registered trademarks 75

About this document

Symbols

Safety symbols

DANGER

This symbol alerts you to a dangerous situation. Failure to avoid this situation will result in serious or fatal injury.

WARNING

This symbol alerts you to a dangerous situation. Failure to avoid this situation can result in serious or fatal injury.

CAUTION

This symbol alerts you to a dangerous situation. Failure to avoid this situation can result in minor or medium injury.

NOTICE

This symbol contains information on procedures and other facts which do not result in personal injury.

Electrical symbols

Ground connection: ⏚

Terminal for connection to the grounding system.

Symbols for certain types of information

Permitted: ✓

Procedures, processes or actions that are permitted.

Forbidden: ✗

Procedures, processes or actions that are forbidden.

Additional information: ℹ

Reference to documentation: 📖

Reference to page: 📄

Series of steps: 1., 2., 3.

Result of an individual step: ↳

Symbols in graphics

Item numbers: 1, 2, 3 ...

Series of steps: 1., 2., 3.

Views: A, B, C, ...

Symbols on the device

Safety instructions: ⚠ → 📖

Observe the safety instructions contained in the associated Operating Instructions.

List of abbreviations

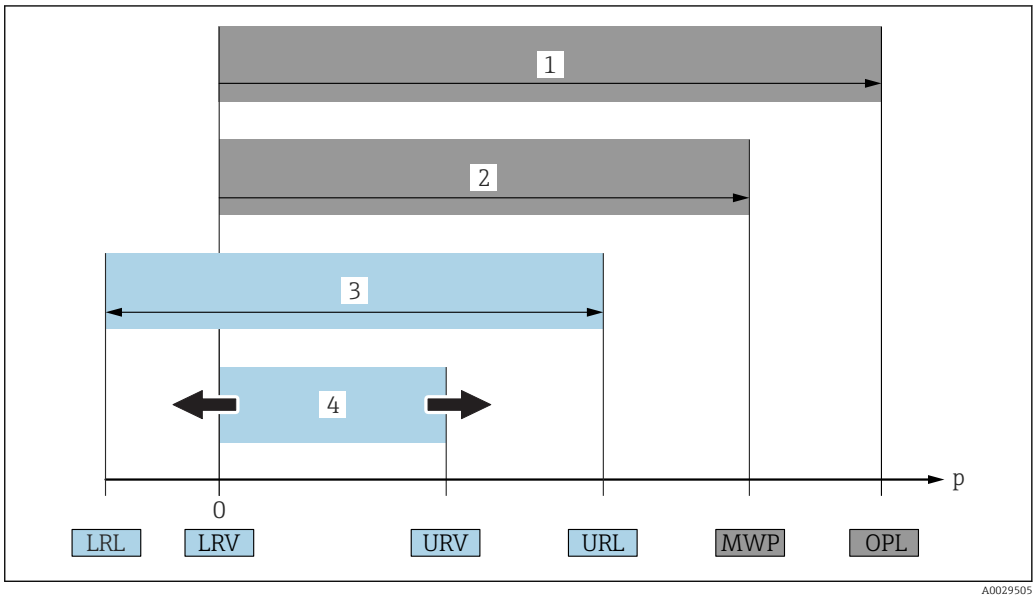

1 *OPL: The OPL (overpressure limit = measuring cell overload limit) for the device depends on the lowest-rated element, with regard to pressure, of the selected components, i.e. the process connection has to be taken into consideration in addition to the measuring cell. Pay attention to the pressure/temperature dependency.*
2 *The MWP (maximum working pressure) for the measuring cells depends on the lowest-rated element, with regard to pressure, of the selected components, i.e. the process connection has to be taken into consideration in addition to the measuring cell. Pay attention to the pressure/temperature dependency. The MWP may be applied at the device for an unlimited period of time. The MWP can be found on the nameplate.*
3 *The maximum measuring range corresponds to the span between the LRL and URL. This measuring range is equivalent to the maximum calibratable/adjustable span.*
4 *The calibrated/adjusted span corresponds to the span between the LRV and URV. Factory setting: 0 to URL. Other calibrated spans can be ordered as customized spans.*
p Pressure
LRL Lower range limit
URL Upper range limit
LRV Lower range value
URV Upper range value
TD Turn down. Example - see the following section.

Turn down calculation

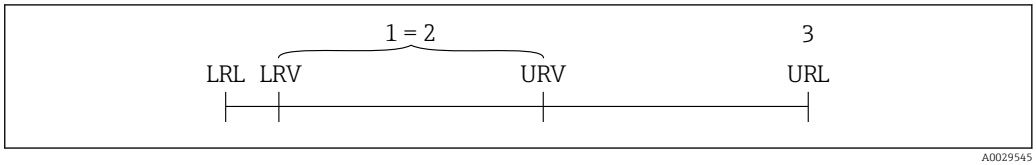

1 *Calibrated/adjusted span*
2 *Zero point-based span*
3 *Upper range limit*

Example:
- Measuring cell: 10 bar (150 psi)
- Upper range limit (URL) = 10 bar (150 psi)
- Calibrated/adjusted span: 0 to 5 bar (0 to 75 psi)
- Lower range value (LRV) = 0 bar (0 psi)
- Upper range value (URV) = 5 bar (75 psi)

$$TD = \frac{URL}{|URV - LRV|}$$

In this example, the TD is therefore 2:1. This measuring span is based on the zero point.

Function and system design

Measuring principle

Metallic membrane

Standard device (without diaphragm seal)

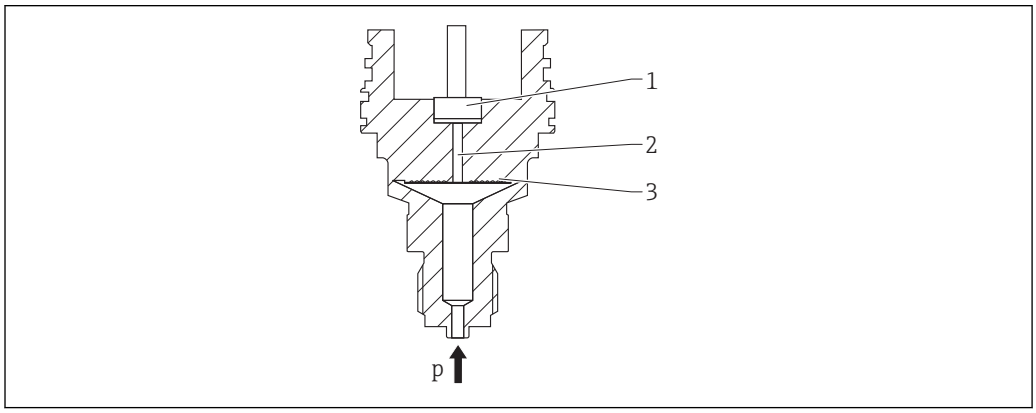

A0043089

1 Measuring element
2 Channel with fill fluid
3 Metallic membrane
p Pressure

The pressure deflects the metallic membrane of the measuring cell. A fill fluid transfers the pressure to a Wheatstone bridge (semiconductor technology). The pressure-dependent change in the bridge output voltage is measured and evaluated.

Advantages:
- Can be used for high pressures
- High long-term stability
- High overload resistance
- Secondary containment for enhanced integrity
- Significantly reduced thermal effect e.g. compared to diaphragm seal systems with capillaries

Device with diaphragm seal

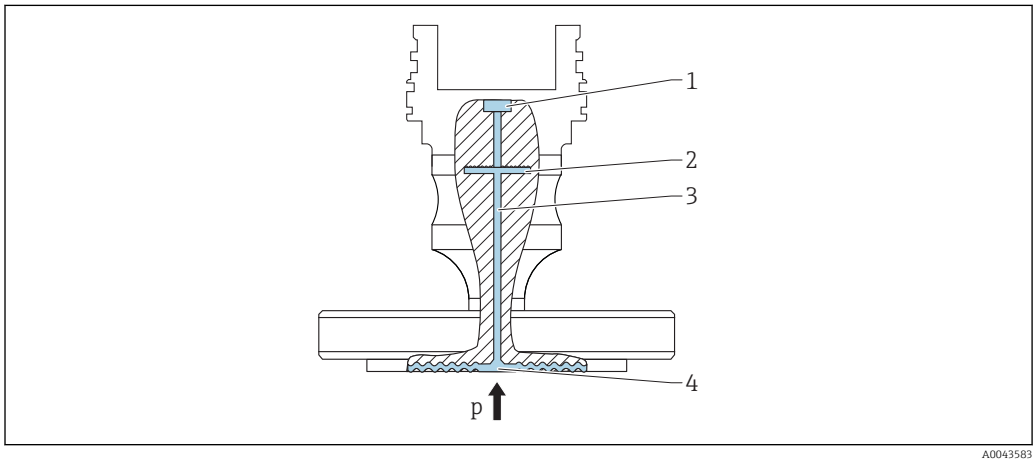

A0043583

1 Measuring element
2 Internal membrane
3 Channel with fill fluid
4 Metallic membrane
p Pressure

The pressure acts on the membrane of the diaphragm seal and is transferred to the internal membrane by a fill fluid. The internal membrane is deflected. A fill fluid transfers the pressure to the

measuring element on which a resistance bridge is located. The pressure-dependent change in the bridge output voltage is measured and evaluated.

Advantages:
- Depending on the version, can be used for pressures up to 400 bar (6 000 psi) and for extreme process temperatures
- High long-term stability
- High overload resistance
- Standard device (without diaphragm seal): secondary containment for enhanced integrity

Applications for diaphragm seals

Diaphragm seal systems are used if the process and the device need to be separated. Diaphragm seal systems offer clear advantages in the following instances:
- In the case of extreme process temperatures - through the use of temperature isolators or capillaries
- In the case of strong vibrations - decouple the process from the device by using a capillary
- In the case of aggressive or corrosive media - through the use of high-durability membrane materials
- In the case of media that crystallize or contain solids - through the choice of suitable coatings
- In the case of heterogeneous and fibrous process media
- If extreme measuring point cleaning is necessary, or in the event of very damp mounting locations
- For mounting locations that are difficult to access

Measuring system

Device versions

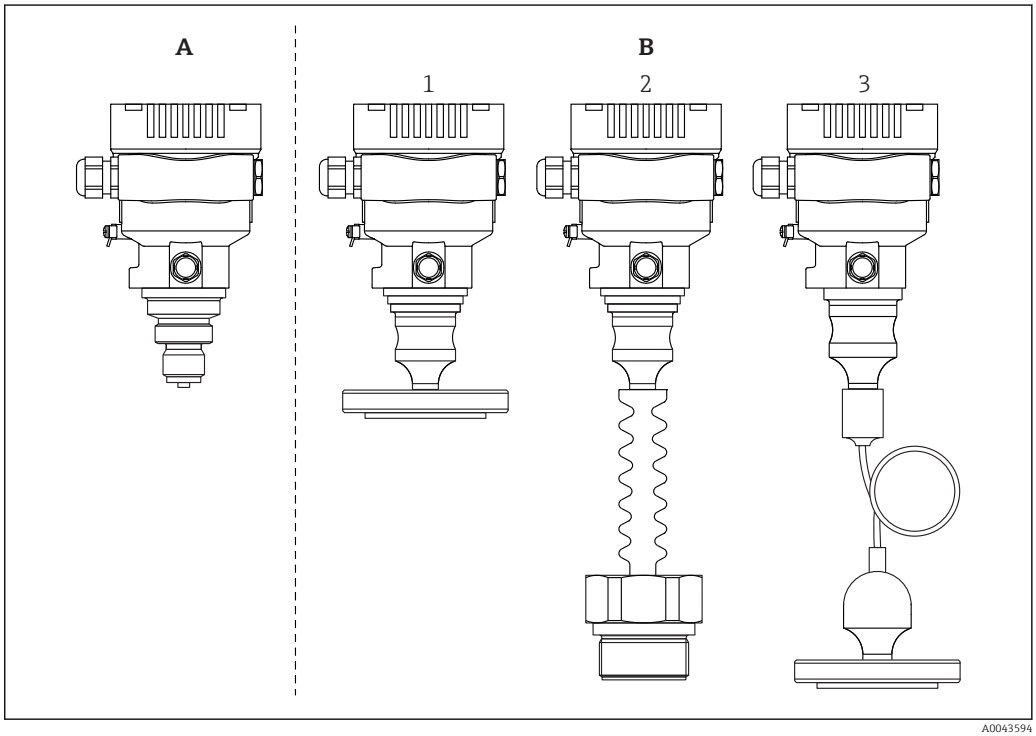

A Standard device (without diaphragm seal)
B Device with diaphragm seal
1 Compact diaphragm seal type
2 Diaphragm seal type with temperature isolator
3 Diaphragm seal type with capillary

Level measurement (level, volume and mass)

Standard device (without diaphragm seal)

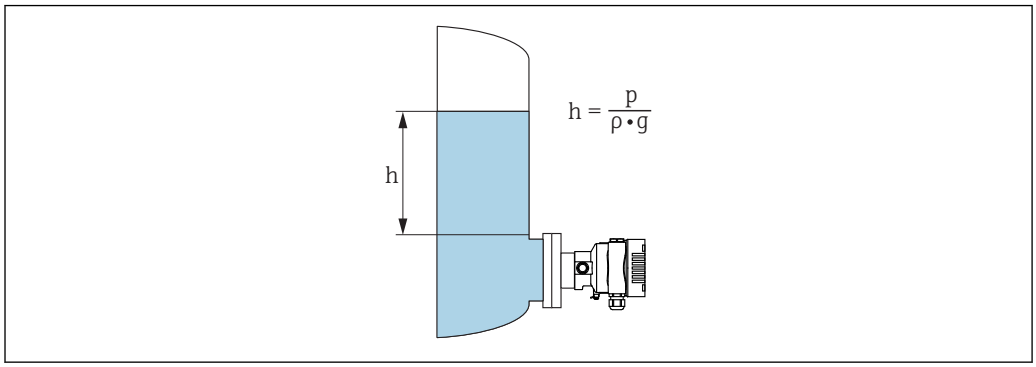

h *Height (level)*
p *Pressure*
ρ *Density of the medium*
g *Gravitational acceleration*

Device with diaphragm seal

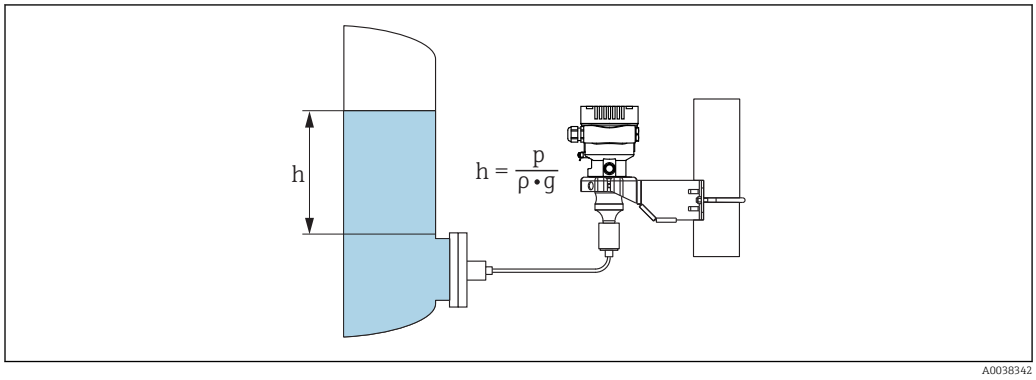

1 *Sample illustration: diaphragm seal with capillary*

h *Height (level)*
p *Pressure*
ρ *Density of the medium*
g *Gravitational acceleration*

Advantages:

- Volume and mass measurements in any vessel shape with a freely programmable characteristic curve
- Has a wide range of uses, e.g.
  - For foam formation
  - In vessels with agitators or screen fittings
  - For liquid gases

Communication and data processing

- 4 to 20 mA with HART communication protocol (optional)
- Bluetooth (optional)
- PROFINET with Ethernet-APL: 10BASE-T1L communication protocol

Dependability for devices with HART, Bluetooth, PROFINET with Ethernet-APL

IT security

Endress+Hauser can only provide a warranty if the device is installed and used as described in the Operating Instructions. The device is equipped with security mechanisms to protect it against any inadvertent changes to the device settings. IT security measures in line with operators' security standards and designed to provide additional protection for the device and device data transfer must be implemented by the operators themselves.

Device-specific IT security

The device offers specific functions to support protective measures by the operator. These functions can be configured by the user and guarantee greater in-operation safety if used correctly. An overview of the most important functions is provided in the following section:

- Write protection via hardware write protection switch
- Access code to change user role (applies to operation via Bluetooth, FieldCare, DeviceCare and asset management tools (e.g. AMS, PDM and Web server)

Function/interface	Factory setting	Recommendation
Access code (also applies to Web server login or FieldCare connection)	Not enabled (0000)	Assign a customized access code during commissioning.
Web server	Enabled	On an individual basis following risk assessment.
Service interface (CDI)	Enabled	On an individual basis following risk assessment.
Write protection via hardware write protection switch	Not enabled	On an individual basis following risk assessment.

Protecting access via a password

Different passwords are available to protect write access to the parameters of the device.

Protect write access to the parameters of the device via the local display, Web browser or operating tool (e.g. FieldCare, DeviceCare). Access authorization is clearly regulated through the use of a user-specific access code.

User-specific access code

Write access to the parameters of the device via the local display, Web browser or operating tool (e.g. FieldCare, DeviceCare) can be protected using the editable, user-specific access code.

General notes on the use of passwords

- During commissioning, change the access code used when the device was delivered
- When defining and managing the access code, comply with the general rules for the generation of a secure password
- The user is responsible for managing the access code and for using the code with due care

Access via Web server

Thanks to the integrated Web server, the device can be operated and configured using a Web browser and via PROFINET with Ethernet-APL. In addition to the measured values, status information on the device is displayed and can be used to monitor device health. Furthermore the device data can be managed and the network parameters can be configured.

Access to the network is required for the PROFINET with Ethernet-APL connection.

Supported functions
Data exchange between the operating unit (such as a notebook, for example,) and measuring device:
- Export parameter settings (PDF file, create documentation of the measuring point configuration)
- Download driver (GSDML) for system integration

The Web server is enabled when the device is delivered. The Web server can be disabled via the **Web server functionality** parameter if necessary (e.g. after commissioning).

The device and status information can be hidden on the login page. This prevents unauthorized access to the information.

Detailed information on the device parameters:
"Description of Device Parameters" document

Input

Measured variable

Measured process variables

- Absolute pressure
- Gauge pressure

Measuring range

Depending on the device configuration, the maximum working pressure (MWP) and the overpressure limit (OPL) can deviate from the values in the tables.

Absolute pressure

Measuring cell	Maximum measuring range [1]		Smallest calibratable span (preset at factory) [2]	
	lower (LRL)	upper (URL)		
	[bar_{abs} (psi_{abs})]	[bar_{abs} (psi_{abs})]	[bar (psi)]	Platinum
400 mbar (6 psi)	0	+0.4 (+6)	0.005 (0.075) [3]	80 mbar (1.2 psi)
1 bar (15 psi)	0	+1 (+15)	0.01 (0.15) [4]	200 mbar (3 psi)
2 bar (30 psi)	0	+2 (+30)	0.02 (0.3) [4]	400 mbar (6 psi)
4 bar (60 psi)	0	+4 (+60)	0.04 (0.6) [4]	800 mbar (12 psi)
10 bar (150 psi)	0	+10 (+150)	0.1 (1.5) [4]	2 bar (30 psi)
40 bar (600 psi)	0	+40 (+600)	0.4 (6) [4]	8 bar (120 psi)
100 bar (1500 psi)	0	+100 (+1500)	1.0 (15) [4]	20 bar (300 psi)
400 bar (6000 psi)	0	+400 (+6000)	4 (60) [4]	80 bar (1200 psi)

1) Device with diaphragm seal: Within the measuring range, the minimum upper range value of 80 $mbar_{abs}$ (1.16 psi_{abs}) must be observed.
2) The maximum TD is 5:1 in the case of platinum.
3) Largest factory-configurable turn down: 80:1
4) Largest factory-configurable turn down: 100:1

Absolute pressure

Measuring cell	MWP	OPL	Vacuum resistance [1]	Burst pressure [2]
	[bar_{abs} (psi_{abs})]	[bar_{abs} (psi_{abs})]	[bar_{abs} (psi_{abs})]	[bar (psi)]
400 mbar (6 psi)	4 (60)	6 (90)	▪ Silicone oil: 0.01 (0.15) ▪ Inert oil: 0.04 (0.6)	100 (1450)
1 bar (15 psi)	6.7 (100)	10 (150)		100 (1450)
2 bar (30 psi)	13.3 (200)	20 (300)		100 (1450)
4 bar (60 psi)	18.7 (280.5)	28 (420)		100 (1450)
10 bar (150 psi)	26.7 (400.5)	40 (600)		100 (1450)
40 bar (600 psi)	100 (1500)	160 (2400)		250 (3625)
100 bar (1500 psi)	100 (1500)	400 (6000)		1000 (14500)
400 bar (6000 psi)	400 (6000)	600 (9000)		2000 (29000)

1) The vacuum resistance applies for the measuring cell under reference operating conditions. A ceramic membrane is recommended for applications in the limit range. Device with diaphragm seal: Observe the pressure and temperature application limits of the selected fill fluid.
2) The information applies to the standard device (without a diaphragm seal).

Gauge pressure

Measuring cell	Maximum measuring range		Smallest calibratable span (preset at factory) [1]	
	lower (LRL)	upper (URL)		
	[bar (psi)]	[bar (psi)]	[bar (psi)]	Platinum
400 mbar (6 psi)	−0.4 (−6)	+0.4 (+6)	0.005 (0.075) [2]	80 mbar (1.2 psi)
1 bar (15 psi)	−1 (−15)	+1 (+15)	0.01 (0.15) [3]	200 mbar (3 psi)

Measuring cell	Maximum measuring range		Smallest calibratable span (preset at factory) [1]	
	lower (LRL)	upper (URL)		
	[bar (psi)]	[bar (psi)]	[bar (psi)]	Platinum
2 bar (30 psi)	−1 (−15)	+2 (+30)	0.02 (0.3) [3]	400 mbar (6 psi)
4 bar (60 psi)	−1 (−15)	+4 (+60)	0.04 (0.6) [3]	800 mbar (12 psi)
10 bar (150 psi)	−1 (−15)	+10 (+150)	0.1 (1.5) [3]	2 bar (30 psi)
40 bar (600 psi)	−1 (−15)	+40 (+600)	0.4 (6) [3]	8 bar (120 psi)
100 bar (1 500 psi)	−1 (−15)	+100 (+1500)	1.0 (15) [3]	20 bar (300 psi)
400 bar (6 000 psi)	−1 (−15)	+400 (+6000)	4 (60) [3]	80 bar (1 200 psi)

1) The maximum TD is 5:1 in the case of platinum.
2) Largest factory-configurable turn down: 80:1
3) Largest factory-configurable turn down: 100:1

Gauge pressure

Measuring cell	MWP	OPL	Vacuum resistance [1]	Burst pressure [2]
	[bar (psi)]	[bar (psi)]	[bar_{abs} (psi_{abs})]	[bar (psi)]
400 mbar (6 psi)	4 (60)	6 (90)	▪ Silicone oil: 0.01 (0.15) ▪ Inert oil: 0.04 (0.6)	100 (1450)
1 bar (15 psi)	6.7 (100)	10 (150)		100 (1450)
2 bar (30 psi)	13.3 (200)	20 (300)		100 (1450)
4 bar (60 psi)	18.7 (280.5)	28 (420)		100 (1450)
10 bar (150 psi)	26.7 (400.5)	40 (600)		100 (1450)
40 bar (600 psi)	100 (1500)	160 (2400)		250 (3625)
100 bar (1 500 psi)	100 (1500)	400 (6000)		1000 (14500)
400 bar (6 000 psi)	400 (6000)	600 (9000)		2000 (29000)

1) The vacuum resistance applies to the measuring cell under reference operating conditions. A ceramic membrane is recommended for applications in the limit range. Device with diaphragm seal: Observe the pressure and temperature application limits of the selected fill fluid.
2) The information applies to the standard device (without a diaphragm seal).

Output

Output signal

Current output

4 to 20 mA analog, 2-wire

4 to 20 mA with superimposed digital communication protocol HART, 2-wire

The current output offers a choice of three different operating modes:
- 4.0 to 20.5 mA
- NAMUR NE 43: 3.8 to 20.5 mA (factory setting)
- US mode: 3.9 to 20.8 mA

PROFINET with Ethernet-APL

10BASE-T1L, 2-wire 10 Mbit

Signal on alarm

Signal on alarm in accordance with NAMUR recommendation NE 43.

- 4 to 20 mA analog:
  - Signal over-range: > 20.5 mA
  - Signal under-range: < 3.8 mA
  - Min alarm (< 3.6 mA, factory setting)
- 4 to 20 mA HART:
  Options:
  - Max alarm: can be set from 21.5 to 23 mA
  - Min. alarm: < 3.6 mA (factory setting)
- PROFINET with Ethernet-APL:
  - According to "Application layer protocol for decentralized periphery", Version 2.4
  - Diagnostics according to PROFINET PA Profile 4.02

Load

4 to 20 mA analog

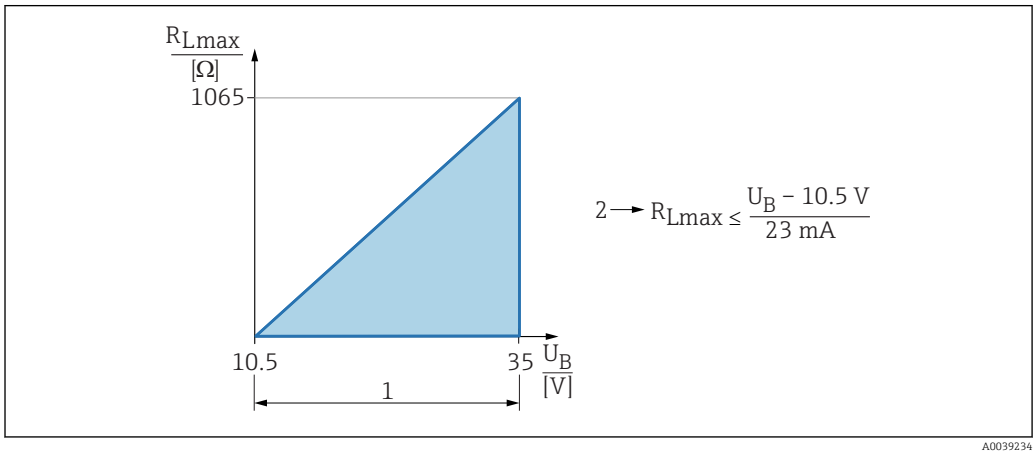

1 10.5 to 35 V power supply
2 R_{Lmax} maximum load resistance
U_B Supply voltage

4 to 20 mA HART

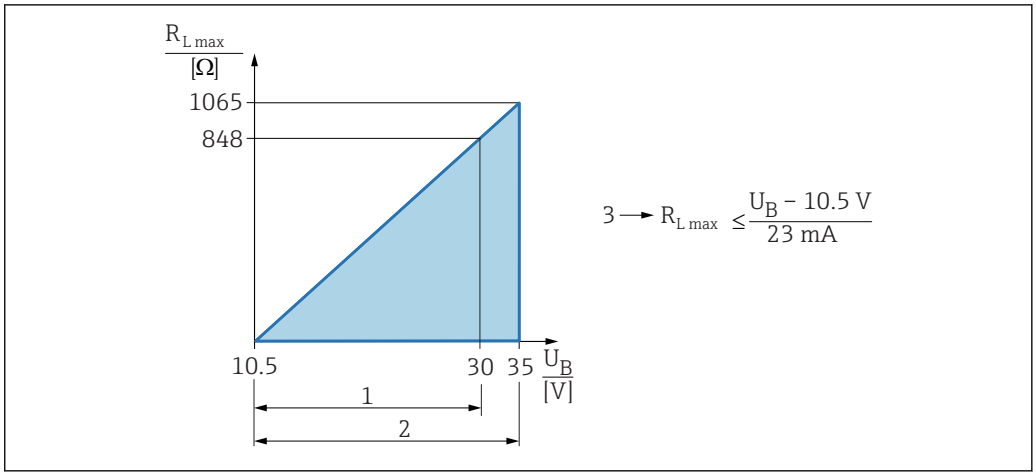

1 Power supply 10.5 to 30 VDC Ex i
2 Power supply 10.5 to 35 VDC, for other types of protection and non-certified device versions
3 R_{Lmax} maximum load resistance
U_B Supply voltage

Operation via handheld terminal or PC with operating program: take minimum communication resistance of 250 Ω into consideration.

Damping

A damping affects all outputs (output signal, display). Damping can be enabled as follows:
- Via the DIP switch on the electronic insert (analog electronics only)
- Factory setting: 1 s

Ex connection data

See the separate technical documentation (Safety Instructions (XA)) on www.endress.com/download.

Linearization

The device's linearization function allows the user to convert the measured value to any units of height or volume. User-defined linearization tables of up to 32 value pairs can be entered if necessary.

Protocol-specific data

HART

- Manufacturer ID: 17 (0x11{hex})
- Device type ID: 0x112A
- Device revision: 1
- HART specification: 7
- DD revision: 1
- Device description files (DTM, DD) information and files at:
  - www.endress.com
  - www.fieldcommgroup.org
- HART load: min. 250 Ohm

HART device variables (preset at the factory)

The following measured values are assigned to the device variables at the factory:

Device variable	Measured value
Primary variable (PV) [1]	Pressure [2]
Secondary variable (SV)	Sensor temperature

Device variable	Measured value
Tertiary variable (TV)	Electronics temperature
Quaternary variable (QV)	Sensor pressure [3]

1) The PV is always applied to the current output.
2) The pressure is the calculated signal after damping and position adjustment.
3) The Sensor pressure is the raw signal of the measuring cell before damping and position adjustment.

Choice of HART device variables

- **Pressure** option (after position adjustment and damping)
- Scaled variable
- Sensor temperature
- Sensor pressure
  Sensor Pressure is the raw signal from sensor before damping and position adjustment.
- Electronics temperature
- Percent of range
- Loop current
  The loop current is the output current set by the applied pressure.

Supported functions

- Burst mode
- Additional transmitter status
- Device locking

PROFINET with Ethernet-APL

Protocol	Application layer protocol for decentral device periphery and distributed automation, Version 2.4
Communication type	Ethernet Advanced Physical Layer 10BASE-T1L
Conformance Class	Conformance Class B
Netload Class	Netload Class II
Baud rates	Automatic 10 Mbit/s with full-duplex detection
Cycle times	From 32 ms
Polarity	Auto-polarity for automatic correction of crossed TxD and RxD pairs
Media Redundancy Protocol (MRP)	Yes
System redundancy support	System redundancy S2 (2 AR with 1 NAP)
Device profile	Application interface identifier 0xB310 Generic device
Manufacturer ID	0x11
Device type ID	A22A
Device description files (GSD, FDI, DTM, DD)	Information and files available at: ▪ www.endress.com On the product page for the device: Documents/Software → Device drivers ▪ www.profibus.org
Supported connections	▪ 2 x AR (IO Controller AR) ▪ 1 x AR (IO-Supervisor Device AR connection allowed) ▪ 1 x Input CR (Communication Relation) ▪ 1 x Output CR (Communication Relation) ▪ 1 x Alarm CR (Communication Relation)
Configuration options for device	▪ Manufacturer-specific software (FieldCare, DeviceCare) ▪ Web browser ▪ Device master file (GSD), can be read out via the integrated Web server of the device ▪ DIP switch for setting the service IP address

Configuration of the device name	▪ DCP protocol ▪ Process Device Manager (PDM) ▪ Integrated Web server
Supported functions	▪ Identification & maintenance Simple device identification via: ▪ Control system ▪ Nameplate ▪ Measured value status The process variables are communicated with a measured value status ▪ Blinking feature via the local display for simple device identification and assignment ▪ Device operation via operating tools (e.g., FieldCare, DeviceCare, SIMATIC PDM)
System integration	For information on system integration, see Operating Instructions ▪ Cyclic data transmission ▪ Overview and description of the modules ▪ Status coding ▪ Startup configuration ▪ Factory setting

Wireless HART data

- Minimum starting voltage: 10.5 V
- Start-up current: 3.6 mA
- Start-up time: <5 s
- Minimum operating voltage: 10.5 V
- Multidrop current: 4 mA

Power supply

Terminal assignment

Single compartment housing

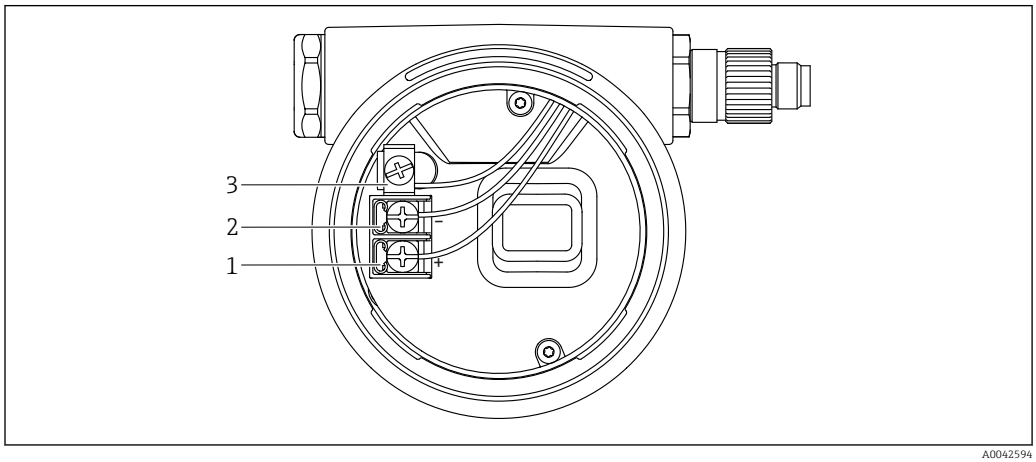

A0042594

2 *Connection terminals and ground terminal in the connection compartment*

1 *Positive terminal*
2 *Negative terminal*
3 *Internal ground terminal*

Dual compartment housing

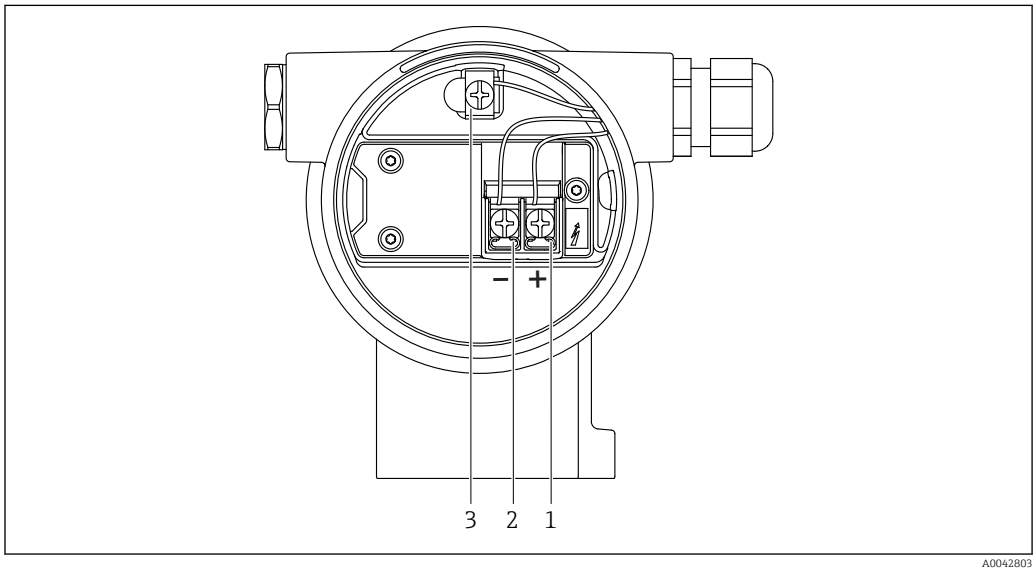

A0042803

3 *Connection terminals and ground terminal in the connection compartment*

1 *Positive terminal*
2 *Negative terminal*
3 *Internal ground terminal*

Available device plugs

In the case of devices with a plug, it is not necessary to open the housing for connection purposes.

Use the enclosed seals to prevent the penetration of moisture into the device.

Devices with valve plug

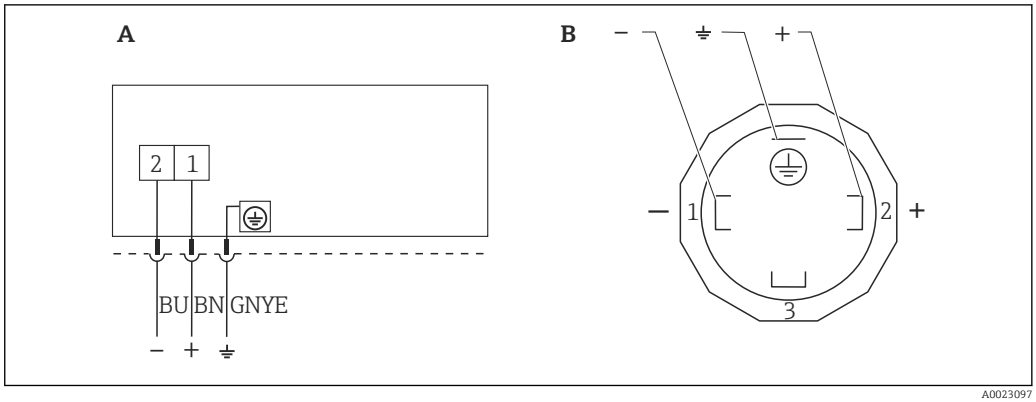

4 *BN = brown, BU = blue, GNYE = green/yellow*

A Electrical connection for devices with valve connector
B View of the plug-in connection on the device

Material: PA 6.6

Devices with M12 plug

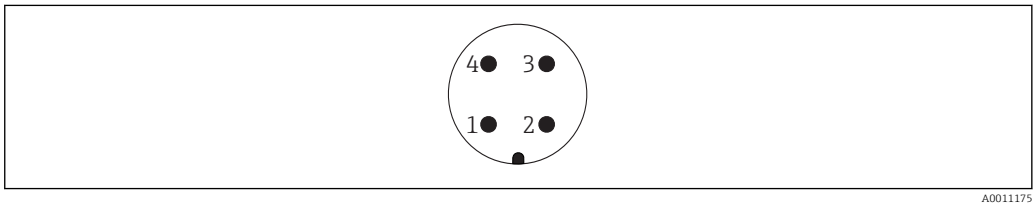

5 *View of the plug-in connection on the device*

Pin	Analog/HART
1	Signal +
2	Not assigned
3	Signal –
4	Ground

Pin	PROFINET with Ethernet-APL
1	APL signal –
2	APL signal +
3	Shielding
4	Not assigned

Endress+Hauser offers the following accessories for devices with an M12 plug:

Plug-in jack M 12x1, straight
- Material:
  Body: PBT; union nut: nickel-plated die-cast zinc; seal: NBR
- Degree of protection (fully locked): IP67
- Order number: 52006263

Plug-in jack M 12x1, elbowed (not for PROFINET with Ethernet-APL)
- Material:
  Body: PBT; union nut: nickel-plated die-cast zinc; seal: NBR
- Degree of protection (fully locked): IP67
- Order number: 71114212

Cable 4x0.34 mm² (20 AWG) with M12 plug-in jack, elbowed, screw plug, length 5 m (16 ft)
- Material: body: TPU; union nut: nickel-plated die-cast zinc; cable: PVC
- Degree of protection (fully locked): IP67/68
- Order number: 52010285
- Cable colors
  - 1 = BN = brown
  - 2 = WT = white
  - 3 = BU = blue
  - 4 = BK = black

Devices with a Harting plug Han7D

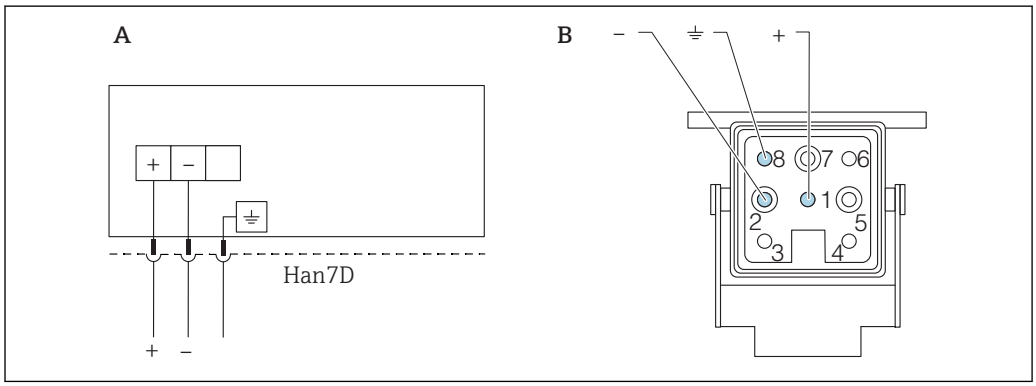

A Electrical connection for devices with Harting plug Han7D
B View of the plug-in connection on the device
- Brown
⏚ Green/yellow
+ Blue

Material: CuZn, gold-plated contacts of the plug-in jack and plug

Supply voltage

- Analog/HART: Ex d, Ex e, non-Ex: supply voltage: 10.5 to 35 V_{DC}
- Analog/HART: Ex i: supply voltage: 10.5 to 30 V_{DC}
- HART: Nominal current: 4 to 20 mA HART
- PROFINET over Ethernet-APL: APL performance class A (9.6 to 15 V_{DC} 540 mW)

Analog/HART: The power unit must be safety-approved (e.g. PELV, SELV, Class 2) and must comply with the relevant protocol specifications. For 4 to 20 mA, the same requirements apply as for HART.

PROFINET with Ethernet-APL: The APL field switch must be safety-approved (e.g. PELV, SELV, Class 2) and must comply with the relevant protocol specifications.

A suitable circuit breaker should be provided for the device in accordance with IEC/EN 61010.

Electrical connection

Connection examples

PROFINET with Ethernet-APL

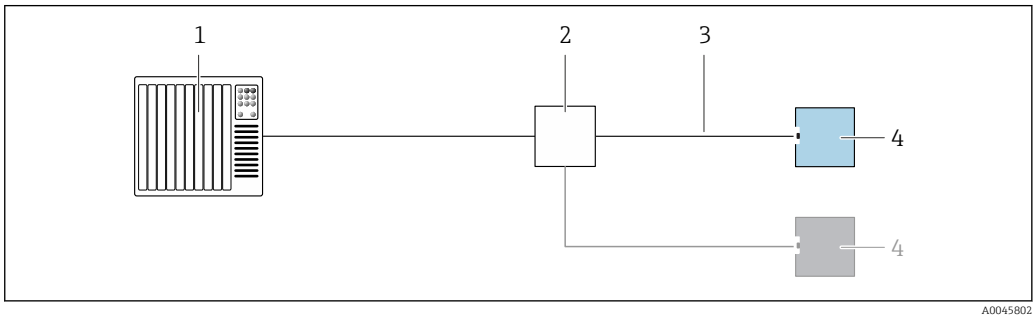

6 *Connection example for PROFINET with Ethernet-APL*

1 *Automation system*
2 *APL field switch*
3 *Observe cable specifications*
4 *Transmitter*

Potential equalization

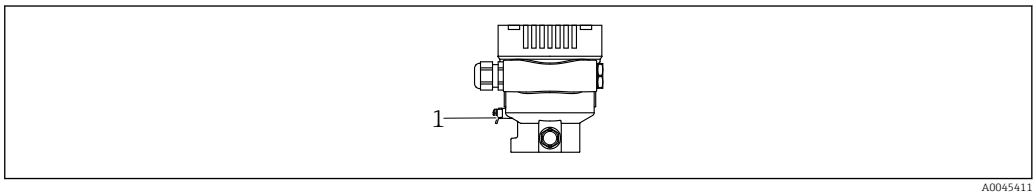

1 *Ground terminal for connecting the potential matching line*

If necessary, the potential matching line can be connected to the outer ground terminal of the device before the device is connected.

For optimum electromagnetic compatibility:
- Keep the potential matching line as short as possible
- Maintain a cross-section of at least 2.5 mm² (14 AWG)

Terminals

- Supply voltage and internal ground terminal: 0.5 to 2.5 mm² (20 to 14 AWG)
- External ground terminal: 0.5 to 4 mm² (20 to 12 AWG)

Cable entries

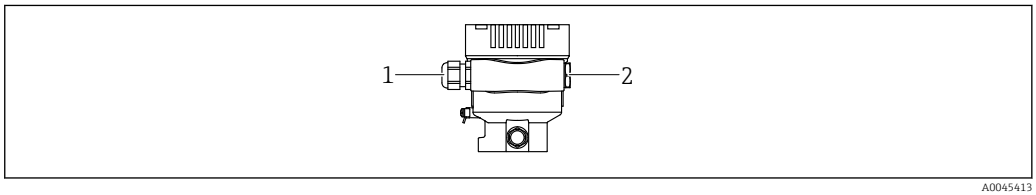

1 *Cable entry*
2 *Dummy plug*

The type of cable entry depends on the device version ordered.

Always route connecting cables downwards so that moisture cannot penetrate the connection compartment.

If necessary, create a drip loop or use a weather protection cover.

Cable specification

- The cable outer diameter depends on the cable entry used
- Cable outer diameter
  - Plastic: Ø5 to 10 mm (0.2 to 0.38 in)
  - Nickel-plated brass: Ø7 to 10.5 mm (0.28 to 0.41 in)
  - Stainless steel: Ø7 to 12 mm (0.28 to 0.47 in)

PROFINET with Ethernet-APL

The reference cable type for APL segments is fieldbus cable type A, MAU type 1 and 3 (specified in IEC 61158-2). This cable meets the requirements for intrinsically safe applications according to IEC TS 60079-47 and can also be used in non-intrinsically safe applications.

Cable type	A
Cable capacitance	45 to 200 nF/km
Loop resistance	15 to 150 Ω/km
Cable inductance	0.4 to 1 mH/km

Further details are provided in the Ethernet-APL Engineering Guideline (https://www.ethernet-apl.org).

Overvoltage protection

Devices without optional overvoltage protection

Equipment from Endress+Hauser fulfills the requirements of the product standard IEC / DIN EN 61326-1 (Table 2 Industrial Environment).

Depending on the type of port (DC power supply, input/output port) different testing levels according to IEC / DIN EN 61326-1 against transient overvoltages (Surge) are applied (IEC / DIN EN 61000-4-5 Surge):
Test level on DC power ports and input / output ports is 1000 V line to earth

Overvoltage category

Overvoltage category II

Performance characteristics

Response time

- HART: acyclic: min. 330 ms, typically 590 ms (depends on commands and number of preambles)
- HART: cyclic (burst): min. 160 ms, typically 350 ms (depends on commands and number of preambles)
- PROFINET with Ethernet-APL: cyclic: min. 32 ms

Reference operating conditions

- As per IEC 62828-2
- Ambient temperature T_A = constant, in the range of +22 to +28 °C (+72 to +82 °F)
- Humidity φ = constant, in the range of: 5 to 80 % rF ± 5 %
- Ambient pressure p_A = constant, in the range of: 860 to 1060 mbar (12.47 to 15.37 psi)
- Position of the measuring cell: horizontal ±1°
- Input of LOW SENSOR TRIM and HIGH SENSOR TRIM for lower range value and upper range value
- Membrane material: AISI 316L (1.4435), Alloy C (Alloy C only for standard device (without diaphragm seal)
- Fill fluid:
  - Silicone oil (standard)
  - Silicone oil, FDA (diaphragm seal)
- Supply voltage: 24 V DC ±3 V DC
- Load with HART: 250 Ω
- Turn down (TD) = URL/ | URV - LRV |
- Zero based span

Total performance

The performance characteristics refer to the accuracy of the device. The factors influencing accuracy can be divided into two groups

- Total performance of device
- Installation factors

All performance characteristics are in conformance with ≥ ± 3 sigma.

The total performance of the device comprises the reference accuracy and the ambient temperature effect and is calculated using the following formula:

Total performance = $\pm \sqrt{ (E1)^2 + (E2)^2 }$

E1 = Reference accuracy

E2 = Ambient temperature effect

Influence of diaphragm seal (calculation performed with Applicator "Sizing Diaphragm Seal")

Calculation of E2:

Ambient temperature effect per ±28 °C (50 °F)

(corresponds to the range from −3 to +53 °C (+27 to +127 °F))

$E2 = E2_M + E2_E$

$E2_M$ = Main temperature error

$E2_E$ = Electronics error

- The values apply to membranes made of 316L (1.4435)
- The values refer to the calibrated span.

Reference accuracy [E1]

The reference accuracy comprises the non-linearity according to the limit point method, pressure hysteresis and non-repeatability in accordance with [IEC62828-1 / IEC 61298-2]. Reference accuracy for standard up to TD 100:1, for platinum up to TD 10:1.

Standard device (without diaphragm seal)

Measuring cell	Standard	Platinum [1)]
400 mbar (6 psi)	TD 1:1 = ±0.075 % TD > 1:1 = ±0.075 % · TD	TD 1:1 = ±0.055 % TD > 1:1 to 10:1 = ±0.055 % · TD
1 bar (15 psi)	TD 1:1 to 2.5:1 = ±0.075 % TD > 2.5:1 = ±0.03 % · TD	TD 1:1 to 2.5:1 = ±0.055 % TD > 2.5:1 to 10:1 = ±0.025 · TD
2 bar (30 psi)	TD 1:1 to 5:1 = ±0.075 % TD > 5:1 = ±0.015 % · TD	TD 1:1 to 5:1 = ±0.055 % TD > 5:1 to 10:1 = ±0.01 % · TD
4 bar (60 psi) 10 bar (150 psi) 40 bar (600 psi) 100 bar (1 500 psi)	TD 1:1 to 10:1 = ±0.075 % TD > 10:1 = ±0.0075 % · TD	TD 1:1 to 10:1 = ±0.055 %
400 bar (6 000 psi)	TD 1:1 to 5:1 = ±0.15 % TD > 5:1 = ±0.03 % · TD	TD 1:1 to 5:1 = ±0.1 % TD > 5:1 to 10:1 = ±0.025 % · TD

1) Platinum not for flush mount process connections G ½, G ¾ and M20.

Device with diaphragm seal

Measuring cell	Standard	Platinum
400 mbar (6 psi)	TD 1:1 = ±0.15 % TD > 1:1 = ±0.15 % · TD	not available
1 bar (15 psi)	TD 1:1 to 5:1 = ±0.15 % TD > 5:1 = ±0.03 % · TD	TD 1:1 to 2.5:1 = ±0.075 % TD > 2.5:1 to 10:1 = ±0.03 % · TD
2 bar (30 psi)	TD 1:1 to 10:1 = ±0.15 % TD > 10:1 = ±0.015 % · TD	TD 1:1 to 5:1 = ±0.075 % TD > 5:1 to 10:1 = ±0.015 % · TD
4 bar (60 psi) 10 bar (150 psi) 40 bar (600 psi) 100 bar (1 500 psi)	TD 1:1 to 10:1 = ±0.15 % TD > 10:1 = ±0.2 %	TD 1:1 to 5:1 = ±0.075 % TD > 5:1 to 10:1 = ±0.075 % · TD
400 bar (6 000 psi)	TD 1:1 to 5:1 = ±0.15 % TD > 5:1 = ±0.03 % · TD	TD 1:1 to 5:1 = ±0.15 % TD > 5:1 to 10:1 = ±0.03 % · TD

Platinum only for direct diaphragm seal mount.

Measuring uncertainty for small absolute pressure measuring ranges

The smallest extended uncertainty of measurement that can delivered by our standards in the 0.001 to 35 mbar (0.0000145 to 0.5075 psi) range is 0.1 % of the reading + 0.004 mbar (0.000058 psi).

Temperature effect [E2]

$E2_M$ - Main temperature error

The output changes due to the effect of the ambient temperature [IEC 62828-1 / IEC 61298-3] with respect to the reference temperature [IEC 62828-1]. The values specify the maximum error due to min./max. ambient or process temperature conditions.

Standard and platinum: 400 mbar (6 psi), 1 bar (15 psi), 2 bar (30 psi) and 4 bar (60 psi) measuring cell
±(0.08 % · TD + 0.16 %)

Standard and platinum: 10 bar (150 psi) and 40 bar (600 psi) measuring cell
±(0.06 % · TD + 0.06 %)

Standard and platinum: 100 bar (1 500 psi) and 400 bar (6 000 psi) measuring cell
±(0.03 % · TD + 0.12 %)

$E2_E$ - Electronics error

- Analog output 4 to 20 mA: 0.2 %
- Digital output HART: 0 %
- Digital output PROFINET: 0 %

Calculation of the total performance with the Endress+Hauser Applicator

Detailed inaccuracies, e.g. for other temperature ranges, can be calculated with the Applicator "Sizing Pressure Performance".

A0038927

Calculation of the diaphragm seal error with the Endress+Hauser Applicator

Diaphragm seal errors are not taken into consideration. They are calculated separately in the Applicator "Sizing Diaphragm Seal".

A0038925

Resolution

Current output: <1 µA

Total error

The total error of the device comprises the total performance and the long-term stability effect and is calculated using the following formula:

Total error = total performance + long-term stability

Calculation of the total error with the Endress+Hauser Applicator

Detailed inaccuracies, e.g. for other temperature ranges, can be calculated with the Applicator "Sizing Pressure Performance".

A0038927

Calculation of the diaphragm seal error with the Endress+Hauser Applicator

Diaphragm seal errors are not taken into consideration. They are calculated separately in the Applicator "Sizing Diaphragm Seal".

A0038925

Long-term stability

The specifications refer to the upper range limit (URL).

- 1 year: ±0.10 %
- 5 years: ±0.20 %
- 10 years: ±0.25 %

Response time T63 and T90

Dead time, time constant

Representation of dead time and time constant as per IEC62828-1:

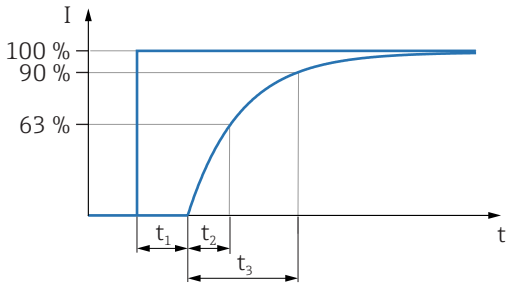

A0019786

Step response time = dead time (t_1) + time constant T90 (t_3) according to IEC62828-1

Dynamic behavior, current output (analog electronics)

Standard device (without diaphragm seal)

- Dead time (t_1): maximum 50 ms
- Time constant T63 (t_2): maximum 40 ms
- Time constant T90 (t_3): maximum 90 ms

Device with diaphragm seal

Values like standard device (without diaphragm seal) plus influence of diaphragm seal. Calculation with Applicator Sizing Diaphragm Seal.

Dynamic behavior, current output (HART electronics)

Standard device (without diaphragm seal)

- Dead time (t_1): maximum 50 ms
- Time constant T63 (t_2): maximum 85 ms
- Time constant T90 (t_3): maximum 200 ms

Devices with diaphragm seal

Values like standard device (without diaphragm seal) plus influence of diaphragm seal. Calculation with Applicator Sizing Diaphragm Seal.

Installation factors

Devices without diaphragm seal

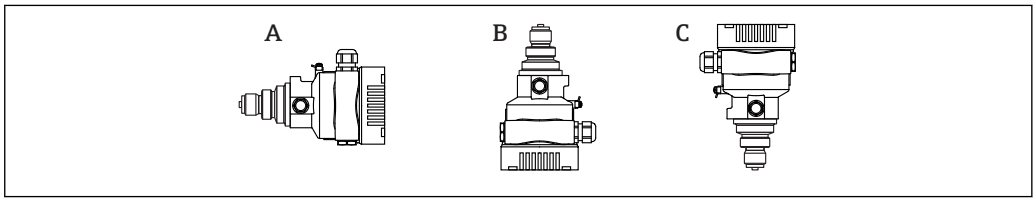

A0052060

The value is doubled for devices with inert oil.
- A: Membrane axis is horizontal: calibration position, no measurement error
- Process connections G ½, ½ MNPT, JIS G ½, JIS R ½, M20x1.5
  - B: Membrane pointing upwards: measurement error ≤ +4 mbar (+0.06 psi)
  - C: Membrane pointing downwards: measurement error ≤ −4 mbar (−0.06 psi)
- Process connections G 1 A, G 1 ½, G 2, 1 ½ MNPT, 2 MNPT, M44x1.25, EN/DIN, ASME and JIS flanges
  - B: Membrane pointing upwards: measurement error ≤ +10 mbar (+0.15 psi)
  - C: Membrane pointing downwards: measurement error ≤ −10 mbar (−0.15 psi)

A position-dependent zero point shift can be corrected on the device.

Devices with diaphragm seals

Take the additional influence of the hydrostatic pressure of the diaphragm seal oil into consideration.

Warm-up time (according to IEC62828-4)

≤5 s

Mounting

Orientation

- A position-dependent zero point shift (when the vessel is empty the measured value does not display zero) can be corrected
- Diaphragm seals also shift the zero point, depending on the installation position
- The use of shutoff devices and/or water pocket pipes is recommended for mounting
- The orientation depends on the measuring application

Installation instructions

- The standard devices (without diaphragm seals) are mounted according to the same guidelines as pressure gauges (DIN EN837-2)
- To ensure optimal readability of the local display, adjust the housing and local display
- Endress+Hauser offers a mounting bracket to mount the device on pipes or walls
- Use flushing rings for flanges, flange seals and pancake seals if buildup or clogging can be expected at the membrane
  - The flushing ring is clamped between the process connection and the flange, flange seal or pancake seal
  - Material buildup in front of the membrane is flushed away, and the pressure chamber is vented, via the two lateral flushing holes
- When measuring in media containing solids (e.g. dirty liquids), installing separators and drain valves is useful for capturing and removing sediment
- Using a valve manifold allows for easy commissioning, installation and maintenance without interrupting the process
- When mounting the device, establishing the electrical connection and during operation: prevent the penetration of moisture into the housing
- Point the cable and plug downwards as much as possible to prevent moisture from entering (e.g. rainwater or condensation)

Installation instructions for devices with diaphragm seals

General information

A diaphragm seal together with the transmitter form a closed, calibrated system, which has been filled through openings in the diaphragm seal and in the transmitter's measurement system. These openings are sealed and must not be opened.

In the case of devices with diaphragm seals and capillaries, the zero point shift caused by the hydrostatic pressure of the filling liquid column in the capillaries must be taken into account when selecting the measuring cell. Perform zero adjustment if necessary. If a measuring cell with a small measuring range is selected, a position adjustment can cause the measuring cell to go over range (position adjustment due to zero point offset, caused by the orientation of the fill fluid liquid column).

For devices with a capillary, use a suitable bracket (mounting bracket) for mounting.

When mounting, sufficient strain relief must be provided for the capillary to prevent the capillary from bending (capillary bending radius ≥ 100 mm (3.94 in)).

Mount the capillary so that it is vibration-free (in order to avoid additional pressure fluctuations).

Do not mount capillaries in the vicinity of heating or cooling lines and protect them against direct sunlight.

More detailed installation instructions are provided in the Applicator "Sizing Diaphragm Seal".

Vacuum applications

In vacuum applications, ideally use pressure transmitters with a ceramic membrane (oil-free).

In vacuum applications, mount the pressure transmitter below the diaphragm seal. This prevents additional vacuum loading of the diaphragm seal caused by the presence of fill fluid in the capillary.

If the pressure transmitter is mounted above the diaphragm seal, do not exceed the maximum height difference h1. The height difference h1 is shown in the Applicator "Sizing Diaphragm Seal".

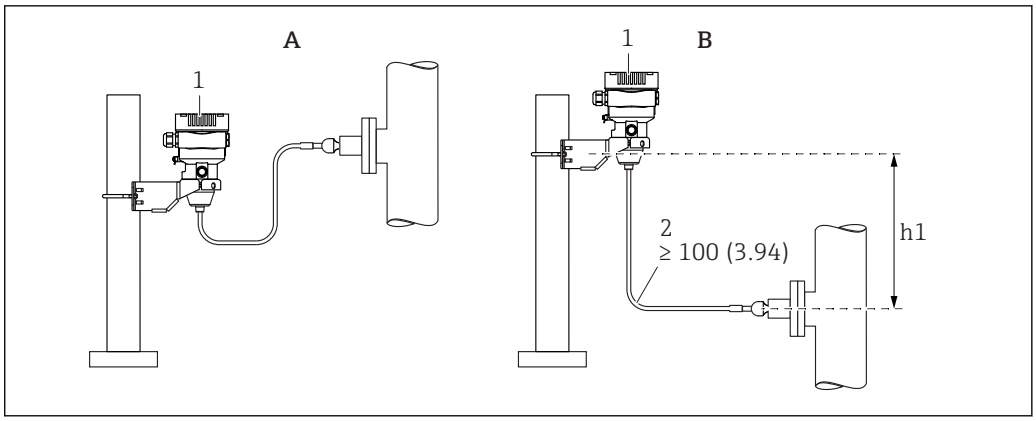

A Recommended installation in a vacuum application
B Installation above the diaphragm seal
h1 Height difference
1 Device
2 Bending radius ≥ 100 mm (3.94 in). Ensure strain relief to prevent the capillary from bending.

The maximum height difference depends on the density of the fill fluid and the lowest absolute pressure that can ever occur at the diaphragm seal (empty vessel).

Sensor selection and arrangement

Mounting the device

Pressure measurement in gases

Mount the device with the shutoff device above the tapping point so that any condensate can flow into the process.

Pressure measurement in steam

Observe the maximum permitted ambient temperature of the transmitter!

Mounting:
- Ideally, mount the device with the O-shaped siphon below the tapping point
  The device may also be mounted above the tapping point
- Fill the siphon with liquid before commissioning

Advantages of using siphons:
- Protects the measuring device from hot, pressurized media due to the formation and collection of condensate
- Attenuation of water hammer
- The defined water column only causes minimal (negligible) measured errors and minimal (negligible) thermal effects on the device

For technical data (e.g. materials, dimensions or order numbers), see the accessory document SD01553P.

Pressure measurement in liquids

Mount the device with the shutoff device below or at the same level as the tapping point.

Level measurement

- Always mount the device below the lowest measuring point
- Do not install the device at the following positions:
  - In the filling curtain
  - In the tank outlet
  - In the suction area of a pump
  - At a point in the tank which could be affected by pressure pulses from the agitator
- Mount the device downstream from a shutoff device: the calibration and function check can be carried out more easily

Mounting bracket for device or separate housing

The device or the separate housing can be mounted on walls or pipes (for pipes with a diameter of 1 ¼" to 2") using the mounting bracket.

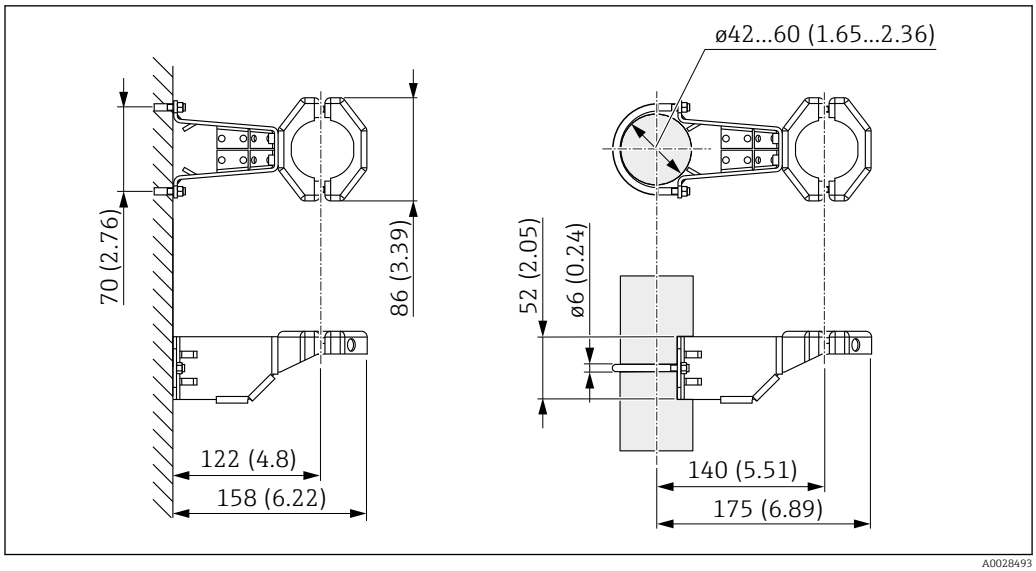

Unit of measurement mm (in)

Ordering information:
- Can be ordered via the Product Configurator
- Can be ordered as a separate accessory, part number 71102216

The mounting bracket is included in the delivery if you order the device with a separate housing.

Special mounting instructions

Wall and pipe mounting with a manifold (optional)

If the device is mounted on a shutoff device (e.g. manifold or shutoff valve), then use the bracket provided for this purpose. This makes it easier to disassemble the device.

For technical data, see the SD01553P accessory document.

Sensor, remote (separate housing)

The housing of the device (including electronic insert) is mounted away from the measuring point.

This version thus facilitates trouble-free measurement
- Under particularly difficult measuring conditions (at installation locations that are cramped or difficult to access)
- If the measuring point is exposed to vibrations

Cable versions:
- PE: 2 m (6.6 ft), 5 m (16 ft) and 10 m (33 ft)
- FEP: 5 m (16 ft).

The sensor is supplied with the process connection and cable fitted. The housing (including electronic insert) and a mounting bracket are enclosed as separate units. The cable is provided with a socket at both ends. These sockets are simply connected to the housing (including electronic insert) and the sensor.

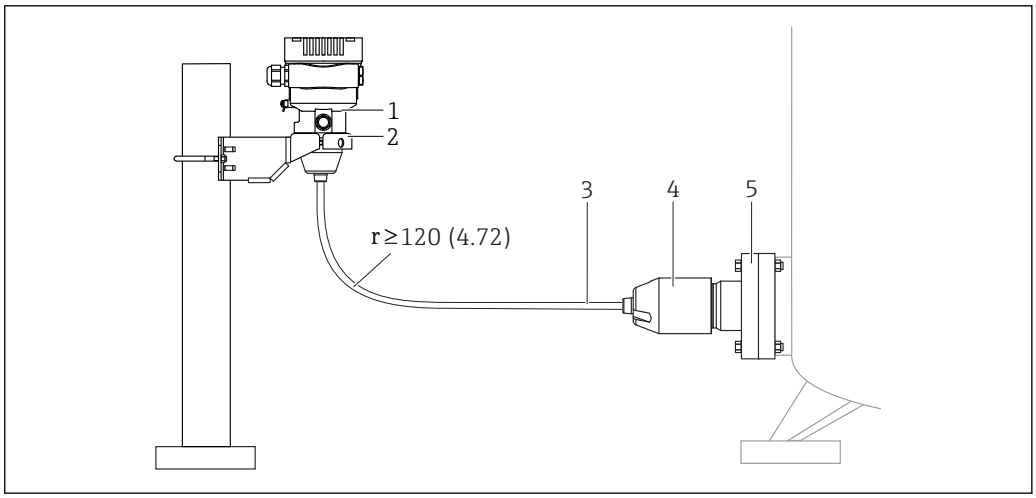

A0038412

1 Sensor, remote (including electronic insert)
2 Mounting bracket provided, suitable for wall mounting or pipe mounting
3 Cable, both ends are fitted with a socket
4 Process connection adapter
5 Process connection with sensor

Ordering information:
- Sensor, remote (including electronic insert), and mounting bracket can be ordered via the Product Configurator
- Mounting bracket can also be ordered as a separate accessory, part number 71102216

Technical data for cable:
- Minimum bending radius: 120 mm (4.72 in)
- Cable extraction force: max. 450 N (101.16 lbf)
- Resistance to UV light

Use in hazardous area:
- Intrinsically safe installations (Ex ia/IS)
- FM/CSA IS: for Div.1 installation only

Reduction of the installation height

If this version is used, the mounting height of the process connection is reduced compared to the dimensions of the standard version.

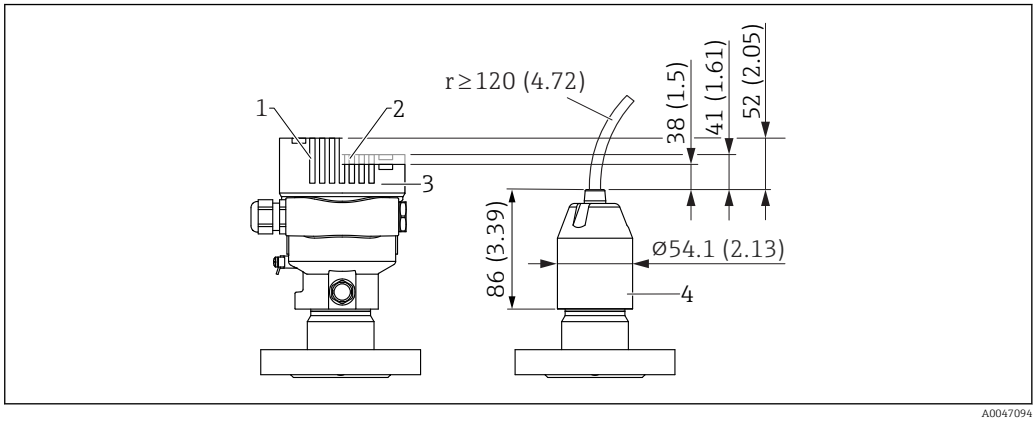

A0047094

1 Device with display, cover with sight glass made of glass (devices for Ex d, dust Ex)
2 Device with display, cover with plastic sight glass
3 Device without display, cover without sight glass
4 Process connection adapter

Environment

Ambient temperature range

The following values apply up to a process temperature of +85 °C (+185 °F). At higher process temperatures, the permitted ambient temperature is reduced.

- Without segment display or graphic display:
  Standard: −40 to +85 °C (−40 to +185 °F)
- With segment display or graphic display: −40 to +85 °C (−40 to +185 °F) with limitations in optical properties such as display speed and contrast. Can be used without limitations up to −20 to +60 °C (−4 to +140 °F)
  Segment display: up to −50 to +85 °C (−58 to +185 °F) with restricted operating life and performance
- Devices with PVC-coated capillary armor: −25 to +80 °C (−13 to +176 °F)
- Separate housing: −20 to +60 °C (−4 to +140 °F)

Applications with very high temperatures: use diaphragm seals with a temperature isolator or capillaries. Use a mounting bracket!

If vibrations additionally occur in the application: use a device with a capillary. Diaphragm seal with temperature isolator: use a mounting bracket!

Ambient temperature T_a depending on the process temperature T_p

The process connection must be fully insulated for ambient temperatures below −40 °C (−40 °F).

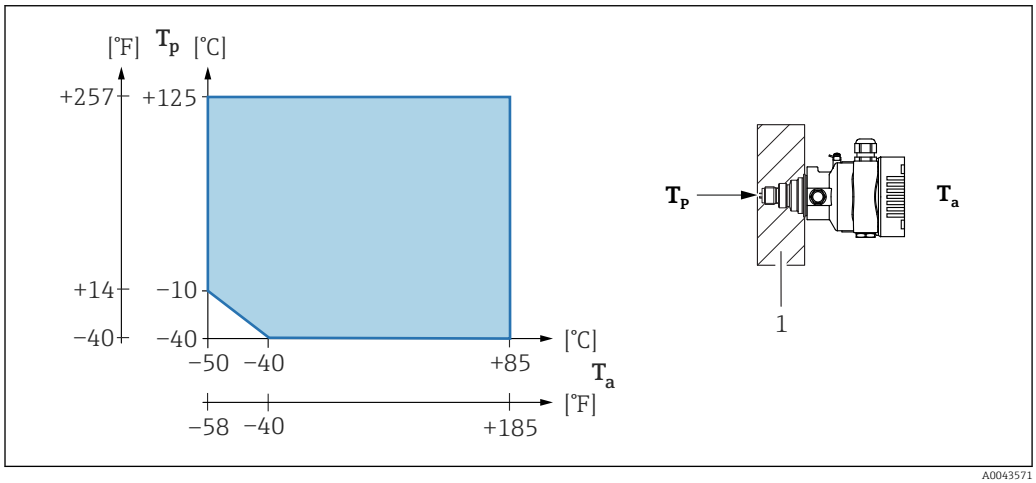

1 Insulation material

Hazardous area

- For devices for use in hazardous areas, see the Safety Instructions, Installation Drawing or Control Drawing
- Devices that have the most common explosion protection certificates (e.g. ATEX/ IEC Ex, etc.) can be used in explosive atmospheres up to the ambient temperature.

Storage temperature

- Without LCD display:
  Standard: −40 to +90 °C (−40 to +194 °F)
- With LCD display: −40 to +85 °C (−40 to +185 °F)
- Separate housing: −40 to +60 °C (−40 to +140 °F)

With M12 plug, elbowed: −25 to +85 °C (−13 to +185 °F)

Devices with PVC-coated capillary armor: −25 to +90 °C (−13 to +194 °F)

Operating altitude

Up to 5 000 m (16 404 ft) above sea level.

Climate class

Class 4K4H (air temperature: −20 to +55 °C (−4 to +131 °F), relative humidity: 4 to 100 %) satisfied as per DIN EN 60721-3-4.

Condensation is possible.

Atmosphere

Operation in very corrosive environment

For corrosive environments (e.g. maritime environment / coastal areas), Endress+Hauser recommends the use of a PVC-coated capillary armor or a PTFE capillary armor for capillaries and the stainless steel housing. The transmitter can be additionally protected by a special coating (**T**echnical **S**pecial **P**roduct (TSP)).

Degree of protection

Test as per IEC 60529 and NMA 250-2014

Housing and process connection

IP66/68, TYPE 4X/6P

(IP68: (1.83 mH_2O for 24 h))

Cable entries

- Gland M20, plastic, IP66/68 TYPE 4X/6P
- Gland M20, brass nickel plated, IP66/68 TYPE 4X/6P
- Gland M20, 316L, IP66/68 TYPE 4X/6P
- Thread M20, IP66/68 TYPE 4X/6P
- Thread G1/2, IP66/68 TYPE 4X/6P
  If the G1/2 thread is selected, the device is delivered with an M20 thread as standard and a G1/2 adapter is included with the delivery, along with the corresponding documentation
- Thread NPT1/2, IP66/68 TYPE 4X/6P
- Dummy plug transport protection: IP22, TYPE 2
- Plug HAN7D, 90 deg. IP65 NEMA Type 4X
- Plug M12
  When housing is closed and connecting cable is plugged in: IP66/67 NEMA Type 4X
  When housing is open or connecting cable is not plugged in: IP20, NEMA Type 1

NOTICE

Plug M12 and plug HAN7D: incorrect mounting can invalidate the IP protection class!

- ▶ The degree of protection only applies if the connecting cable used is plugged in and screwed tight.
- ▶ The degree of protection only applies if the connecting cable used is specified according to IP67 NEMA Type 4X.
- ▶ The IP protection classes are only maintained if the dummy cap is used or the cable is connected.

Process connection and process adapter when using the separate housing

FEP cable

- IP69 (on sensor side)
- IP66 TYPE 4/6P
- IP68 (1.83 mH_2O for 24 h) TYPE 4/6P

PE cable

- IP69 (on sensor side)
- IP66 TYPE 4/6P
- IP68 (1.83 mH_2O for 24 h) TYPE 4/6P

Electromagnetic compatibility (EMC)

- Electromagnetic compatibility as per EN 61326 series and NAMUR recommendation EMC (NE21)
- With regard to the safety function (SIL), the requirements of EN 61326-3-x are satisfied
- Maximum deviation with interference influence: < 0.5% of span with full measuring range (TD 1:1)

For more details refer to the EU Declaration of Conformity.

Process

Process temperature range

Standard device (without diaphragm seal)

NOTICE

The permitted process temperature depends on the process connection, process seal, ambient temperature and the type of approval.

- ▶ All the temperature data in this document must be taken into consideration when selecting the device.

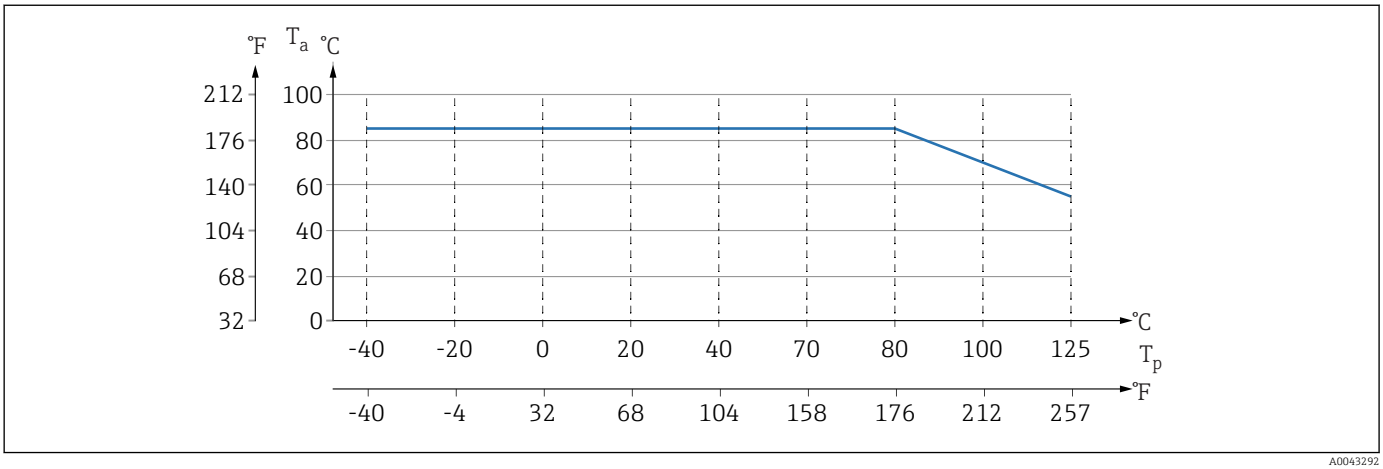

7 *Values apply for vertical mounting without insulation.*

T_p *Process temperature*
T_a *Ambient temperature*

Diaphragm seal fill fluid

Fill fluid	P_{abs} = 0.05 bar (0.725 psi) [1]	P_{abs} ≥1 bar (14.5 psi) [2]
Silicone oil	−40 to +180 °C (−40 to +356 °F)	−40 to +250 °C (−40 to +482 °F)
High-temperature oil	−20 to +200 °C (−4 to +392 °F)	−20 to +400 °C (−4 to +752 °F) [3] [4] [5]
Low-temperature oil	−70 to +120 °C (−94 to +248 °F)	−70 to +180 °C (−94 to +356 °F)
Vegetable oil	−10 to +160 °C (+14 to +320 °F)	−10 to +220 °C (+14 to +428 °F)
Inert oil	−40 to +100 °C (−40 to +212 °F)	−40 to +175 °C (−40 to +347 °F) [6] [7]

1) Permitted temperature range at p_{abs} = 0.05 bar (0.725 psi) (observe temperature limits of the device and the system!)
2) Permitted temperature range at p_{abs} ≥1 bar (14.5 psi) (observe temperature limits of the device and the system!)
3) 325 °C (617 °F) at ≥1 bar (14.5 psi) absolute pressure
4) 350 °C (662 °F) at ≥1 bar (14.5 psi) absolute pressure (max. 200 hours)
5) 400 °C (752 °F) at ≥1 bar (14.5 psi) absolute pressure (max. 10 hours)
6) 150 °C (302 °F) at ≥1 bar (14.5 psi) absolute pressure
7) 175 °C (347 °F) at ≥1 bar (14.5 psi) absolute pressure (max. 200 hours)

Fill fluid	Density [1] kg/m³
Silicone oil	970
High-temperature oil	995
Low-temperature oil	940
Vegetable oil	920
Inert oil	1900

1) Density of the diaphragm seal fill fluid at 20 °C (68 °F).

The calculation of the operating temperature range of a diaphragm seal system depends on the fill fluid, capillary length and capillary internal diameter, process temperature and oil volume of the diaphragm seal. Detailed calculations, e.g. for temperature ranges, negative pressure and temperature ranges, are done separately in the Applicator "Sizing Diaphragm Seal".

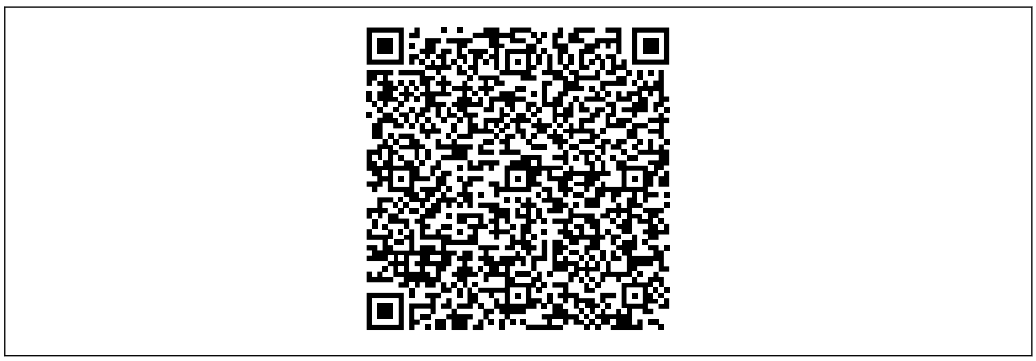

A0038925

Oxygen applications (gaseous)

Oxygen and other gases can react explosively to oils, grease and plastics. The following precautions must be taken:
- All components of the system, such as devices, must be cleaned in accordance with national requirements.
- Depending on the materials used, a certain maximum temperature and a maximum pressure must not be exceeded for oxygen applications.

The cleaning of the device (not accessories) is provided as an optional service.

- p_{max}: Depends on the lowest-rated element, with regard to pressure, of the selected components: Over pressure limit (OPL) of the measuring cell, process connection (1.5 x PN) or fill fluid (80 bar (1 200 psi))
- T_{max}: 60 °C (140 °F)

Standard device (without diaphragm seal)

- Process connections with internal membrane: −40 to +125 °C (−40 to +257 °F) ; 150 °C (302 °F) for max. one hour)
- Process connections with flush membrane:
  - Thread (ISO228, ASME, metric DIN13) and flanges (EN, ASME, JIS): −40 to +100 °C (−40 to +212 °F)
  - Exceptions with seal supplied (M20 x 1.5, G1/2 DIN3852): −20 to +85 °C (−4 to +185 °F)

Devices with diaphragm seal

- Depends on diaphragm seal and fill fluid: −70 °C (−94 °F) up to +400 °C (+752 °F)
- Observe the maximum gauge pressure and maximum temperature

Diaphragm seal with tantalum membrane

−70 to +300 °C (−94 to +572 °F)

Devices with PTFE-coated diaphragm seal membrane

The anti-stick coating has very good anti-friction properties and protects the membrane against abrasive media.

NOTICE

Destruction of the device due to incorrect use of PTFE coating!

▶ The PTFE coating used is designed to protect the unit against abrasion. It does not provide protection against corrosive media.

Area of application of the 0.25 mm (0.01 in) PTFE foil on AISI 316L (1.4404/1.4435) membrane, see the following graphic:

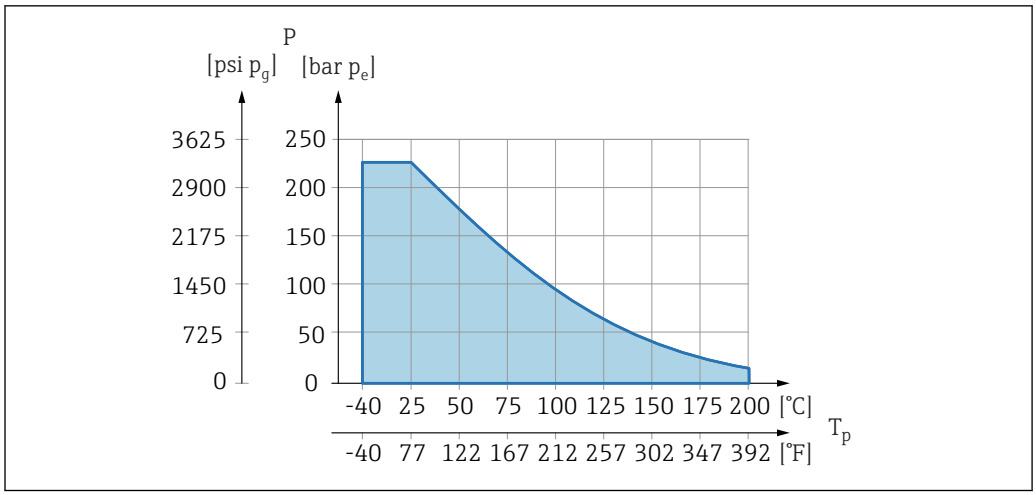

For vacuum applications: $p_{abs} \leq 1$ bar (14.5 psi) to 0.05 bar (0.725 psi) to max.+150 °C (302 °F).
If a PTFE coating has been selected, a conventional membrane is always delivered.

Diaphragm seal capillary armor

Process temperature depending on the ambient temperature.

- 316L: No restrictions
- PTFE: No restrictions
- PVC: See the following diagram

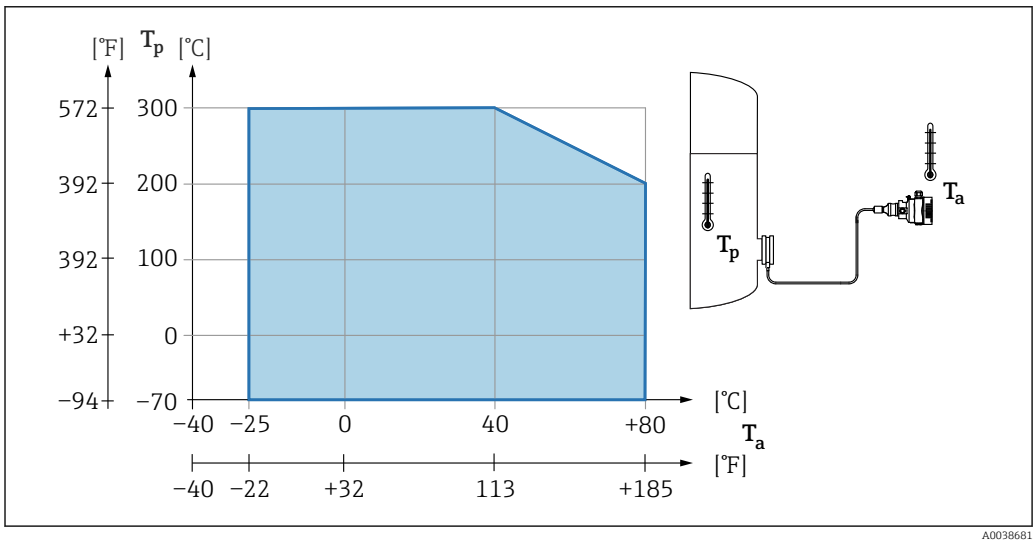

Process pressure range

Pressure specifications

⚠ WARNING

The maximum pressure for the device depends on the lowest-rated component with regard to pressure (components are: process connection, optional mounted parts or accessories).

- Only operate the device within the specified limits for the components!
- MWP (maximum working pressure): The MWP is specified on the nameplate. This value refers to a reference temperature of +20 °C (+68 °F) and may be applied to the device for an unlimited time. Note temperature dependence of MWP. For flanges, refer to the following standards for the permitted pressure values at higher temperatures: EN 1092-1 (with regard to their stability/ temperature property, the materials 1.4435 and 1.4404 are grouped together under EN 1092-1; the chemical composition of the two materials can be identical.), ASME B 16.5a, JIS B 2220 (the latest version of the standard applies in each case). MWP data that deviate from this are provided in the relevant sections of the Technical Information.
- The overpressure limit is the maximum pressure a device may be subjected to during a test. It is greater than the maximum working pressure by a certain factor. This value refers to a reference temperature of +20 °C (+68 °F).
- The Pressure Equipment Directive (2014/68/EU) uses the abbreviation "PS". The abbreviation "PS" corresponds to the MWP (maximum working pressure) of the device.
- In the case of measuring cell range and process connection combinations where the overpressure limit (OPL) of the process connection is smaller than the nominal value of the measuring cell, the device is set at the factory, at the very maximum, to the OPL value of the process connection. If the entire measuring cell range must be used, select a process connection with a higher OPL value (1.5 x PN; MWP = PN).
- Oxygen applications: do not exceed values for P_{max} and T_{max}.

Burst pressure

As of the specified burst pressure, the complete destruction of the pressure-bearing parts and/or a device leak must be expected. It is therefore imperative to avoid such operating conditions by carefully planning and sizing your facility.

Ultrapure gas applications

Endress+Hauser also offers devices for special applications, such as for ultrapure gas, that are cleaned of oil and grease. No special restrictions regarding the process conditions apply to these devices.

Hydrogen applications

A **gold-coated** metallic membrane offers universal protection against hydrogen diffusion, both in gas applications and in applications with water-based solutions.

Steam applications and saturated steam applications

For steam and saturated steam applications: Use a device with a metallic membrane or provide a water pocket pipe for temperature decoupling when installing.

Thermal insulation

Thermal insulation with diaphragm seal directly mounted

The device may only be insulated up to a certain height. The maximum permitted insulation height is indicated on the device and applies to an insulation material with a heat conductivity ≤ 0.04 W/(m x K) and to the maximum permitted ambient and process temperature. The data were determined under the most critical application "quiescent air". Maximum permitted insulation height, indicated here on a device with a flange:

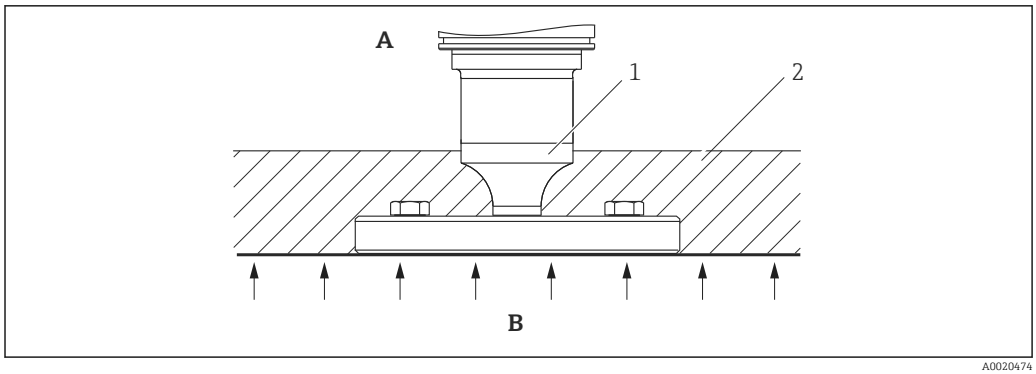

A *Ambient temperature*
B *Process temperature*
1 *Maximum permitted insulation height*
2 *Insulation material*

Mounting with a "Compact" diaphragm seal type

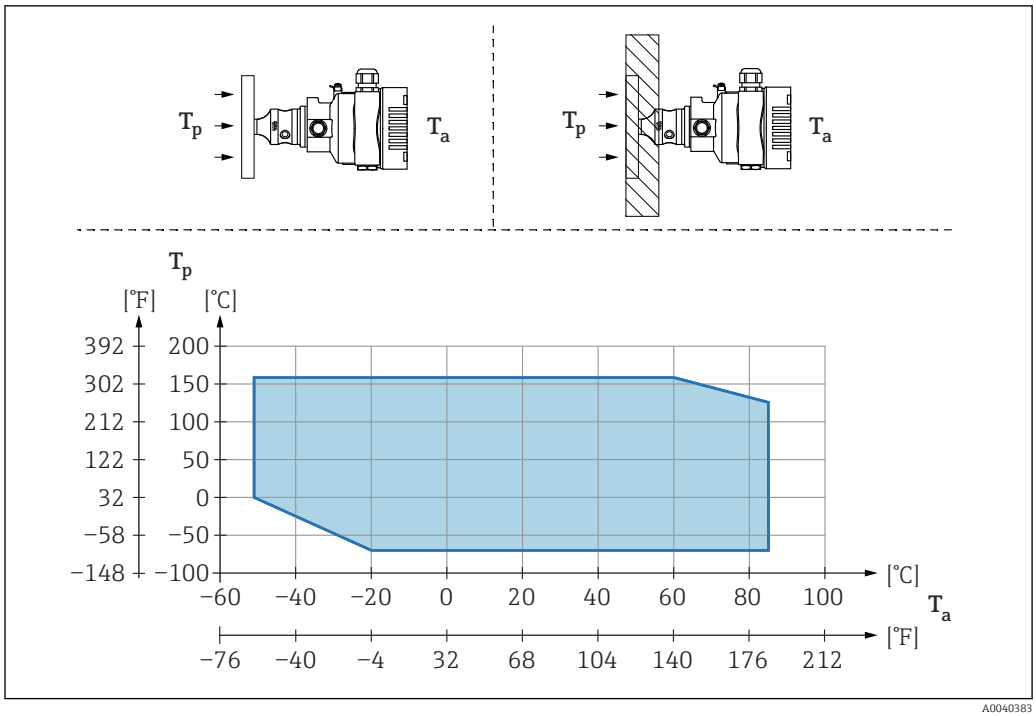

T_a *Ambient temperature at transmitter*
T_p *Maximum process temperature*

T_a	T_p
+85 °C (+185 °F)	−70 to +120 °C (−94 to +248 °F)
+60 °C (+140 °F)	−70 to +160 °C (−94 to +320 °F)
−20 °C (−4 °F)	−70 to +160 °C (−94 to +320 °F)
−50 °C (−58 °F)	0 to +160 °C (+32 to +320 °F)

Thermal insulation when mounting with a "Temperature isolator" diaphragm seal type

Use of temperature isolators in the event of constant extreme medium temperatures which cause the maximum permissible electronics temperature of +85 °C (+185 °F) to be exceeded. Diaphragm seal systems with temperature isolators can be used up to a maximum temperature of +400 °C (+752 °F) depending on the fill fluid used. To minimize the influence of rising heat, mount the device horizontally or with the housing pointing downwards. The additional installation height brings about

a zero point shift due to the hydrostatic column in the temperature isolator. This zero point shift can be corrected on the device.

The maximum ambient temperature T_a at the transmitter depends on the maximum process temperature T_p.

The maximum process temperature depends on the fill fluid used.

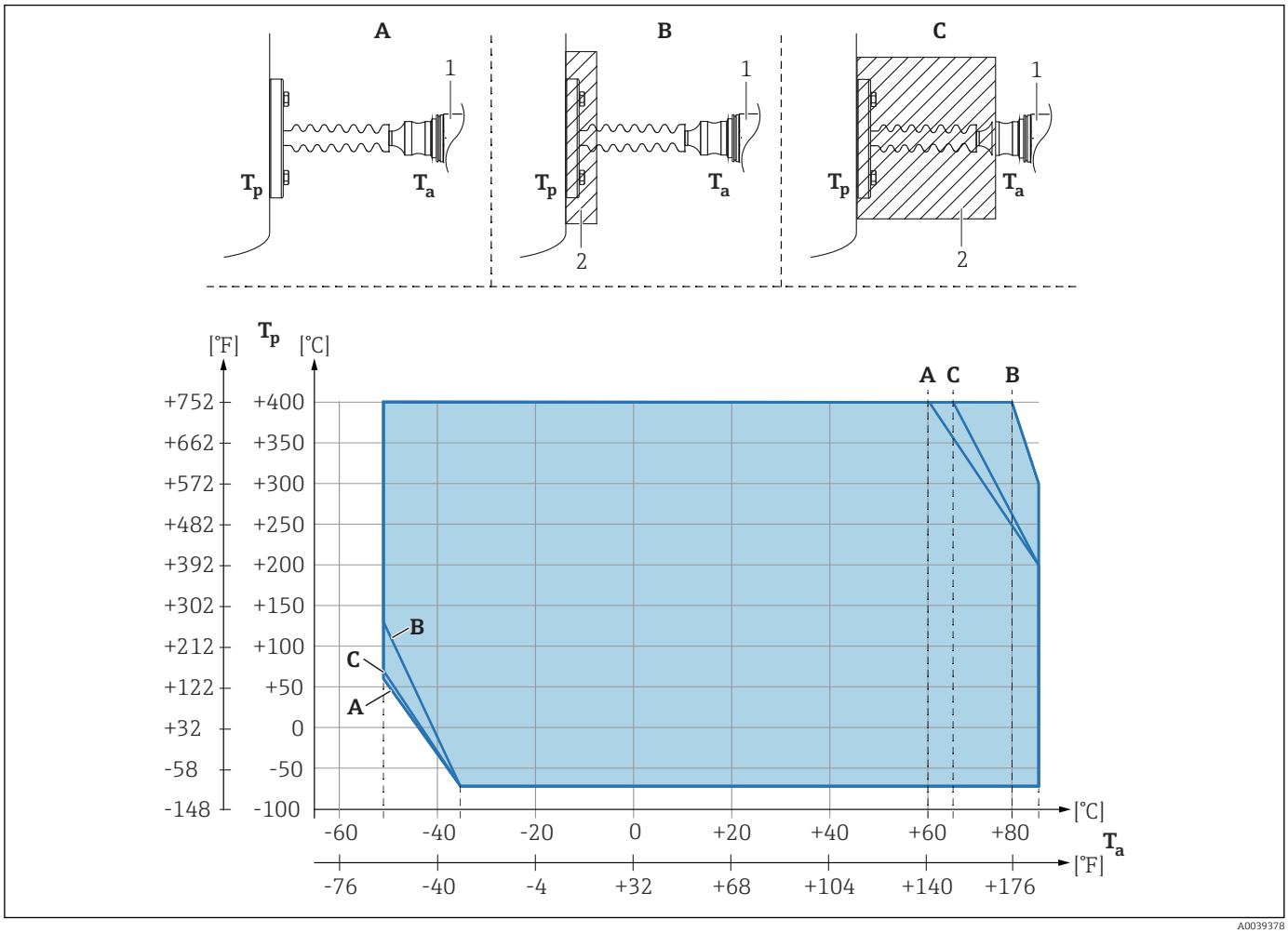

A0039378

A No insulation
B Insulation 30 mm (1.18 in)
C Maximum insulation
1 Transmitter
2 Insulation material

Item	T_a [1]	T_p [2]
A	60 °C (140 °F)	400 °C (752 °F) [3]
	85 °C (185 °F)	200 °C (392 °F)
	−50 °C (−58 °F)	60 °C (140 °F)
	−35 °C (−31 °F)	−70 °C (−94 °F)
B	80 °C (176 °F)	400 °C (752 °F) [3]
	85 °C (185 °F)	300 °C (572 °F)
	−50 °C (−58 °F)	130 °C (266 °F)
	−35 °C (−31 °F)	−70 °C (−94 °F)
C	67 °C (153 °F)	400 °C (752 °F) [3]
	85 °C (185 °F)	200 °C (392 °F)

Item	T_a [1]	T_p [2]
	−50 °C (−58 °F)	70 °C (158 °F)
	−35 °C (−31 °F)	−70 °C (−94 °F)

1) Maximum ambient temperature at transmitter
2) Maximum process temperature
3) Process temperature: max. +400 °C (+752 °F), depending on the fill fluid used

Mechanical construction

Design, dimensions

Height of standard device (without diaphragm seal)

The device height is calculated from
- the height of the housing
- the height of the individual process connection

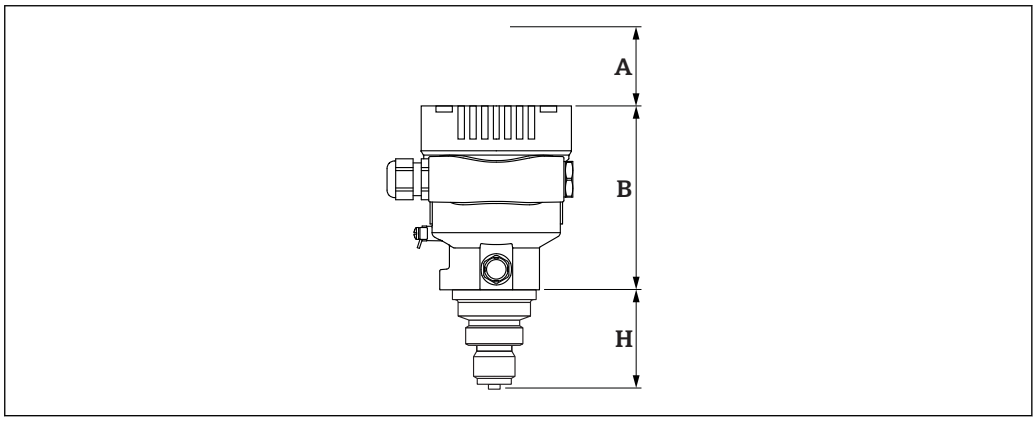

A0043567

A Installation clearance
B Height of the housing
H Height of the process connection

Device height, diaphragm seal

The device height is calculated from
- the height of the housing
- the height of optional mounted parts such as temperature isolators or capillaries
- the height of the individual process connection

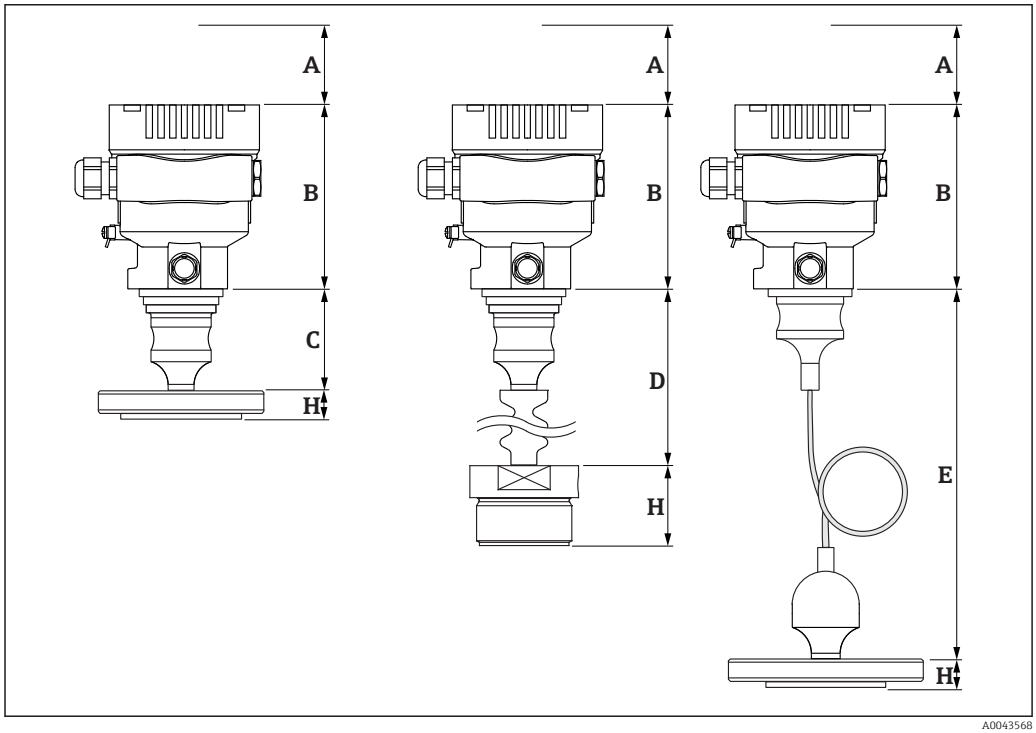

A Installation clearance
B Height of the housing
C Height of the mounted parts, here with the "Compact" diaphragm seal type for example
D Height of the mounted parts, here with the "Temperature isolator" diaphragm seal type for example
E Height of the mounted parts, here with the "Capillary" diaphragm seal type for example
H Height of the process connection

Dimensions

Single compartment housing

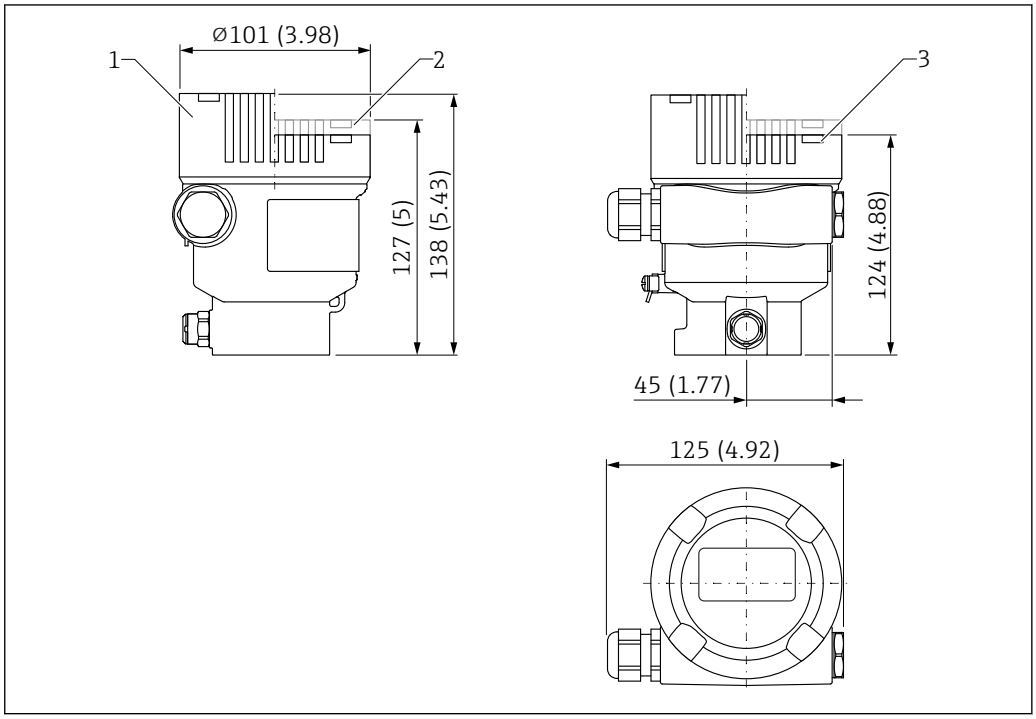

Unit of measurement mm (in)

1 Device with display, cover with sight glass made of glass (devices for Ex d/XP, dust Ex): 138 mm (5.43 in)
2 Device with display, cover with plastic sight glass: 127 mm (5 in)
3 Device without display, cover without sight glass: 124 mm (4.88 in)

Cover optionally with ANSI Safety Red (color RAL3002) coating.

Dual compartment housing

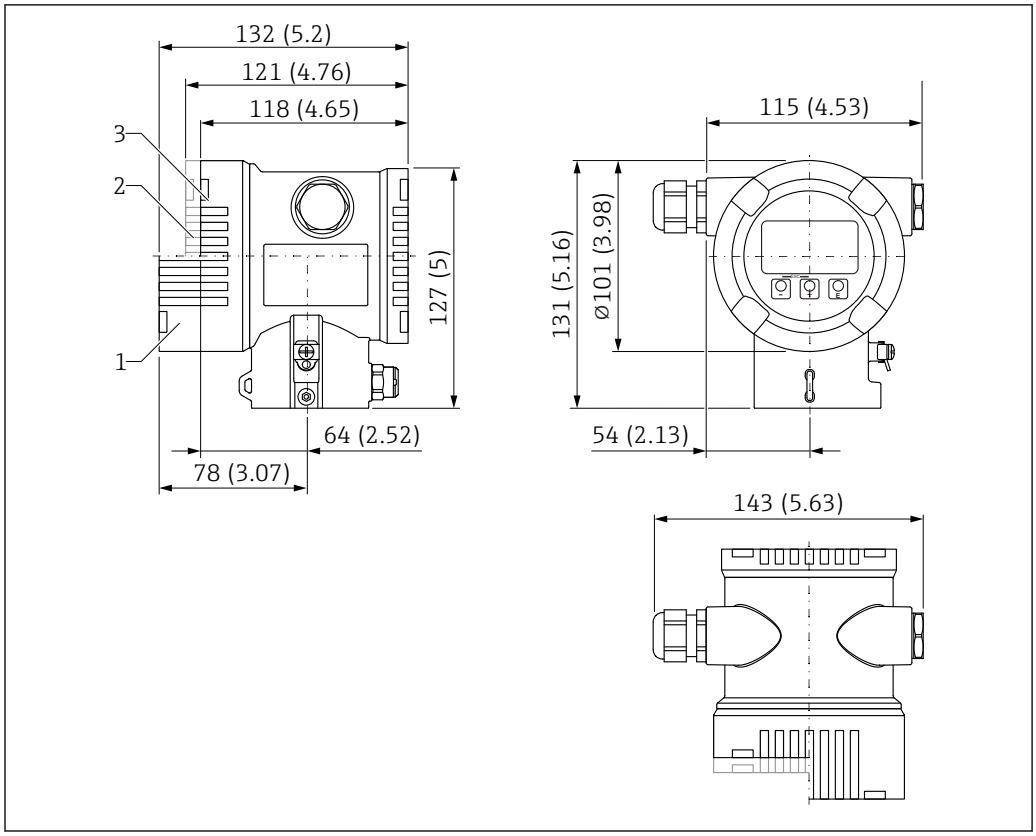

Unit of measurement mm (in)

1 Device with display, cover with sight glass made of glass (devices for Ex d/XP, dust Ex): 132 mm (5.2 in)
2 Device with display, cover with plastic sight glass: 121 mm (4.76 in)
3 Device without display, cover without sight glass: 118 mm (4.65 in)

Cover optionally with ANSI Safety Red (color RAL3002) coating.

Sensor, remote (separate housing)

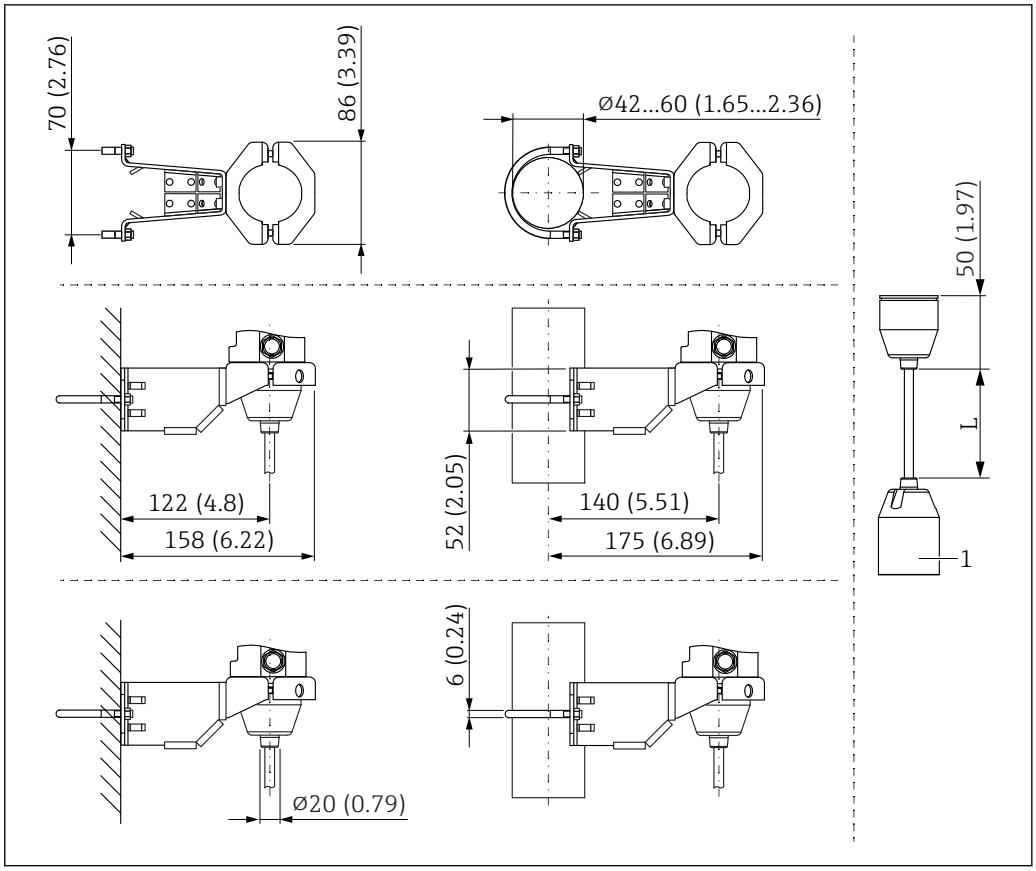

Unit of measurement mm (in)

1 86 mm (3.39 in)
L Length of cable versions

Mounted parts, diaphragm seal

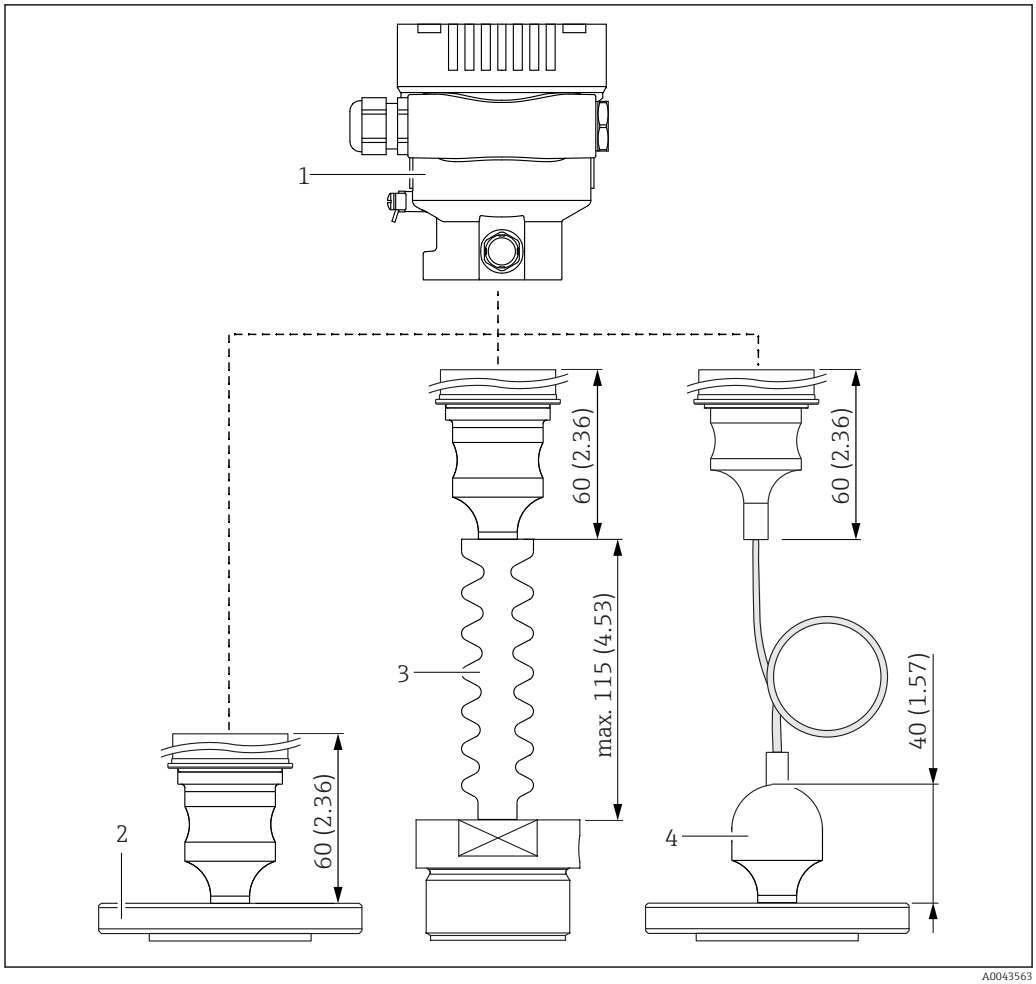

1 Housing
2 Diaphragm seal, e.g. flange diaphragm seal here
3 Diaphragm seal with temperature isolator
4 Process connections with capillary lines are 40 mm (1.57 in) higher than process connections without capillary lines

OPL and MWP

The maximum overpressure limit (OPL) and the maximum working pressure (MWP) of the sensor can deviate from the maximum OPL and MWP of the process connection.

For the maximum OPL and MWP, see the technical documentation of the process connection.

Explanation of terms

- DN or NPS or A = alphanumeric identifier of the flange size
- PN or Class or K = alphanumeric pressure rating of a component

Thread ISO 228 G, flush membrane, standard (without diaphragm seal)

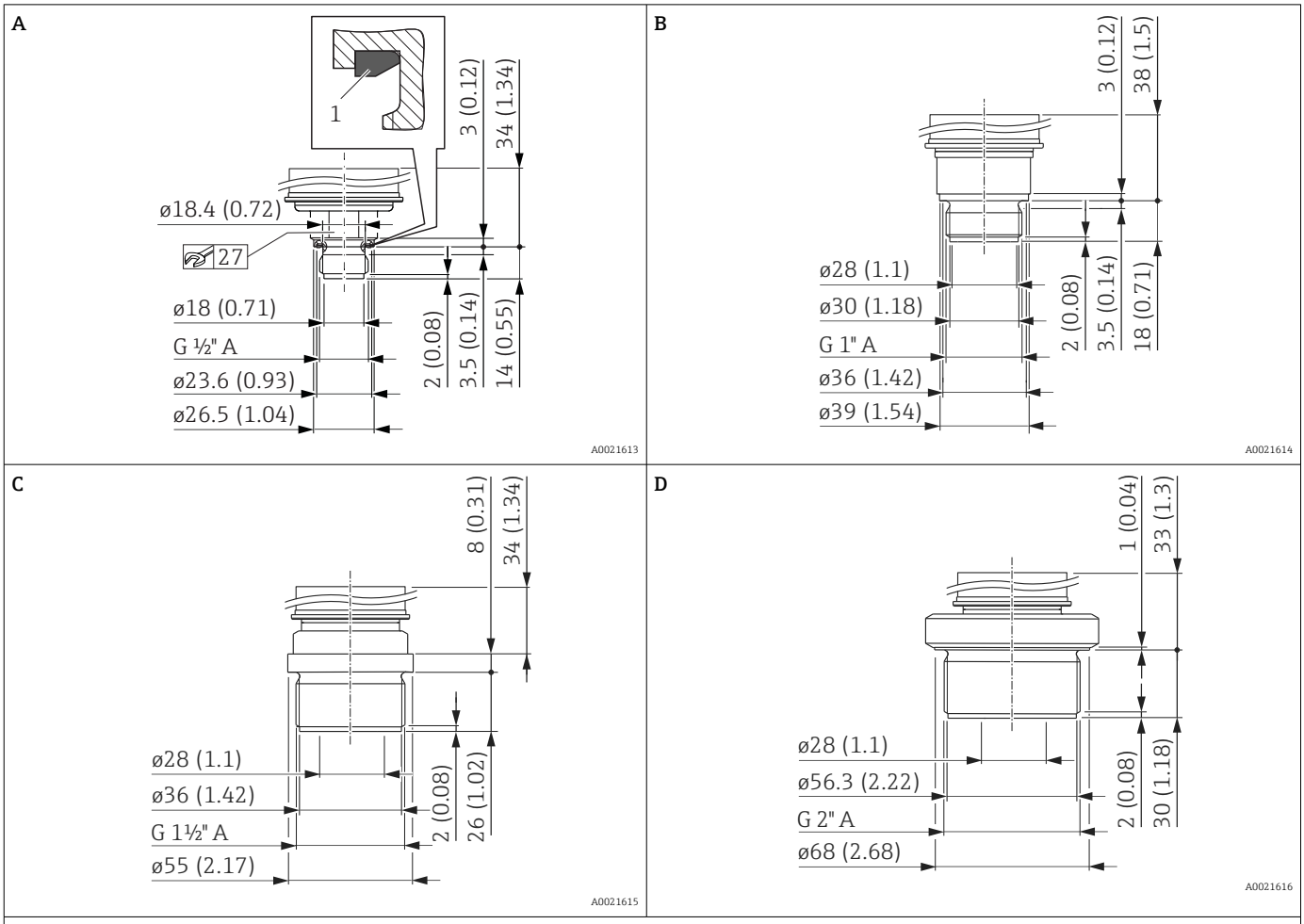

Engineering unit mm (in)

Item	Designation	Material	Weight
			kg (lb)
A	Thread ISO 228 G ½" A, DIN 3852 FKM form seal (item 1) pre-installed	AISI 316L	0.4 (0.88)
B	Thread ISO 228 G 1" A	AISI 316L	0.7 (1.54)
C	Thread ISO 228 G 1 ½" A	AISI 316L	1.1 (2.43)
D	Thread ISO 228 G 2" A	AISI 316L	1.5 (3.31)

Thread DIN, flush membrane, standard (no diaphragm seal)

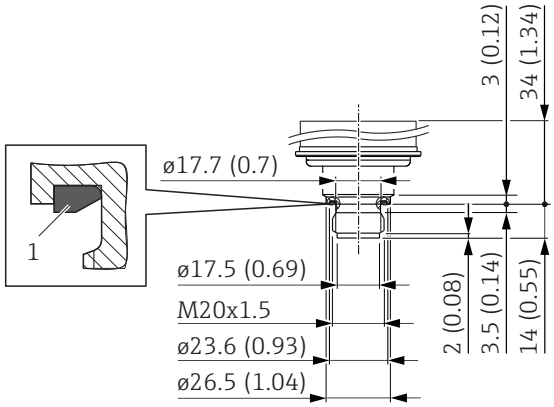

Engineering unit mm (in)

Designation	Material	Weight
		kg (lb)
Thread DIN 16288 M20 FKM 80 flat seal (item 1) pre-installed	AISI 316L	0.4 (0.88)
Thread DIN 16288 M20 FKM 80 flat seal (item 1) pre-installed	Alloy C276 (2.4819)	0.4 (0.88)

Thread ASME, flush membrane, standard (without diaphragm seal)

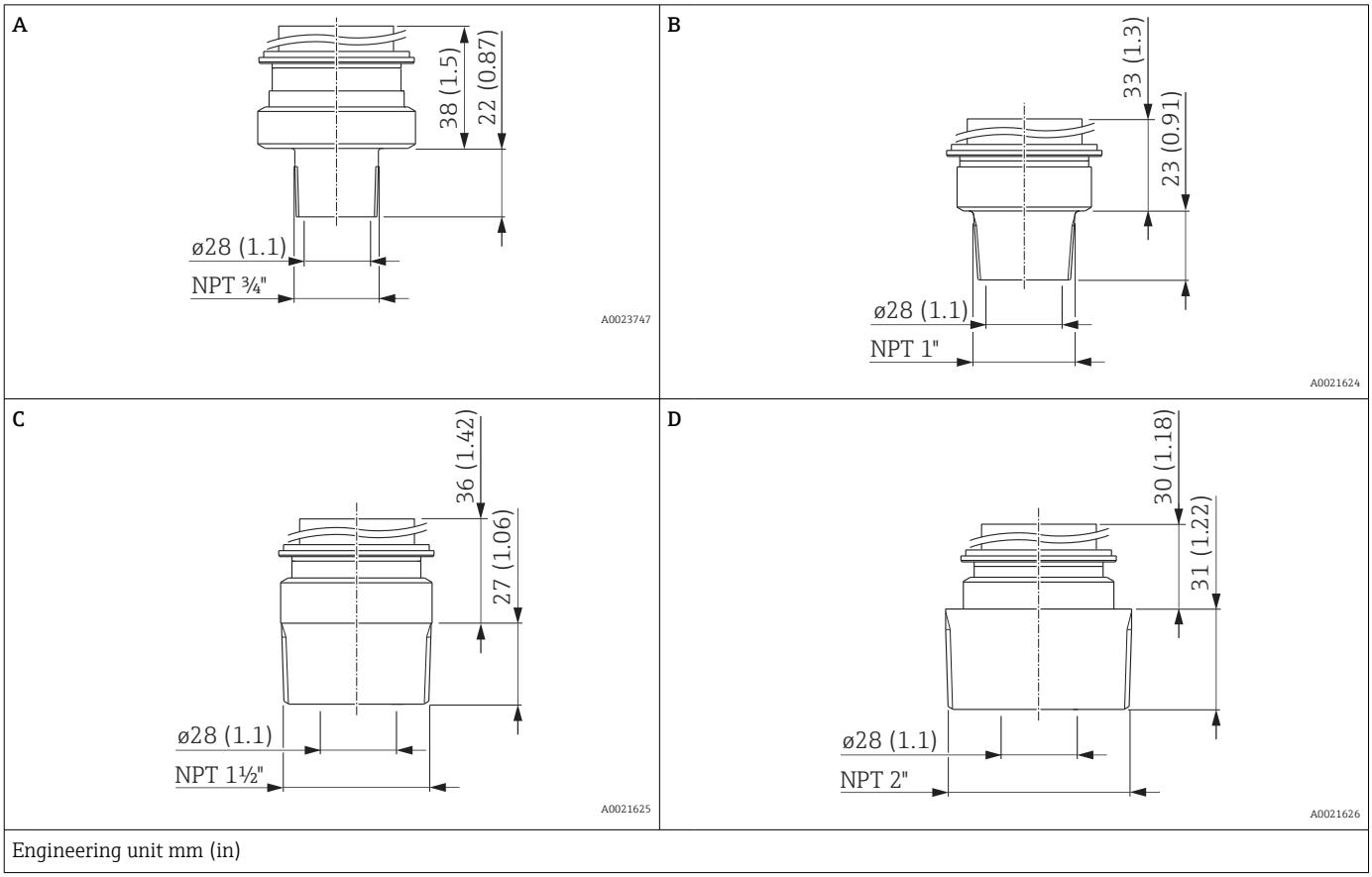

Engineering unit mm (in)

Item	Designation	Material	Weight
			kg (lb)
A	Thread ASME ¾" MNPT	AISI 316L	0.6 (1.32)
B	Thread ASME 1" MNPT	AISI 316L	0.7 (1.54)
B	Thread ASME 1" MNPT	Alloy C276 (2.4819)	0.7 (1.54)
C	Thread ASME 1 ½" MNPT	AISI 316L	1 (2.21)
C	Thread ASME 1 ½" MNPT	Alloy C276 (2.4819)	1 (2.21)
D	Thread ASME 2" MNPT	AISI 316L	1.3 (2.87)

Thread ISO 228 G, internal membrane, standard (without diaphragm seal)

A

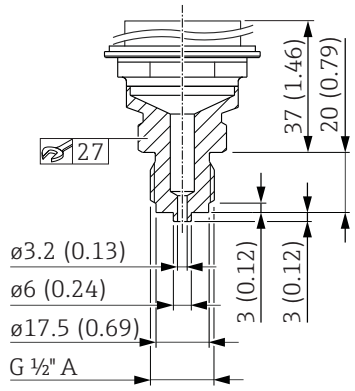

B

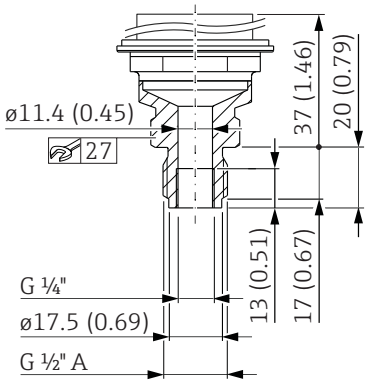

C

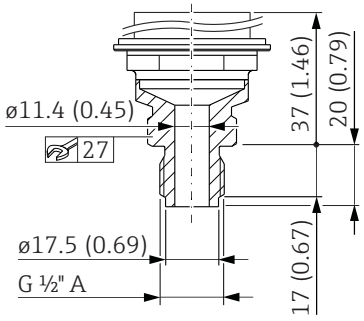

Engineering unit mm (in)

Item	Designation	Material	Weight
			kg (lb)
A	Thread ISO 228 G ½" A EN837 Bore 11.4 mm (0.45 in) = 400 bar (6 000 psi)	AISI 316L	0.63 (1.39)
		Alloy C276 (2.4819)	0.63 (1.39)
B	Thread ISO 228 G ½" A, G ¼" (female) bore 11.4 mm (0.45 in) = 400 bar (6 000 psi)	AISI 316L	0.63 (1.39)
		Alloy C276 (2.4819)	0.63 (1.39)
C	Thread ISO 228 G ½" A, Bore 11.4 mm (0.45 in) = 400 bar (6 000 psi)	AISI 316L	0.63 (1.39)
		Alloy C276 (2.4819)	0.63 (1.39)

Thread ASME B1.20.1, internal membrane, standard (without diaphragm seal)

A

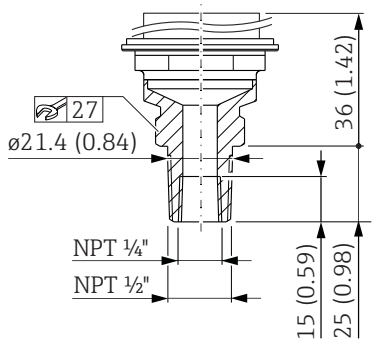

B

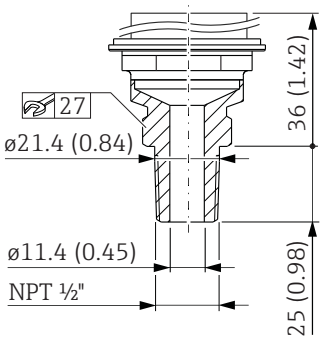

C

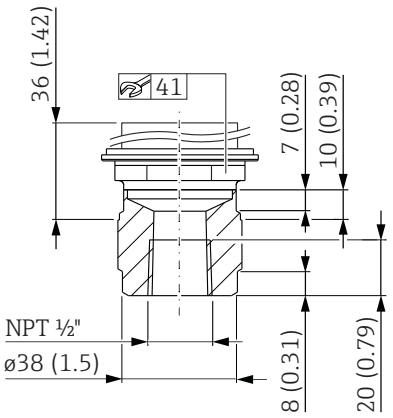

Engineering unit mm (in)

Item	Designation	Material	Weight
			kg (lb)
A	Thread ASME ½" MNPT, ¼" FNPT	AISI 316L	0.63 (1.39)
A	Thread ASME ½" MNPT, ¼" FNPT	Alloy C276 (2.4819)	0.63 (1.39)
B	Thread ASME ½" MNPT, Bore 11.4 mm (0.45 in) = 400 bar (6 000 psi) Bore 3.2 mm (0.13 in) = 700 bar (10 500 psi)	AISI 316L	0.63 (1.39)
B	Thread ASME ½" MNPT, Bore 11.4 mm (0.45 in) = 400 bar (6 000 psi) Bore 3.2 mm (0.13 in) = 700 bar (10 500 psi)	Alloy C276 (2.4819)	0.63 (1.39)
C	Thread ASME ½" FNPT	AISI 316L	0.7 (1.54)
C	Thread ASME ½" FNPT	Alloy C276 (2.4819)	0.7 (1.54)

Thread JIS, internal membrane, standard (without diaphragm seal)

A

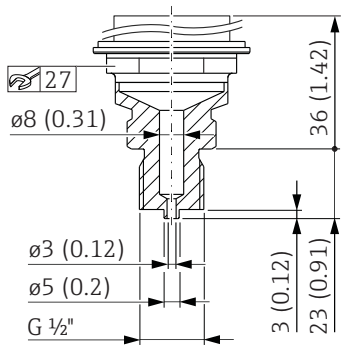

B

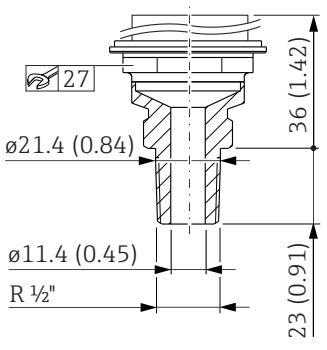

Engineering unit mm (in)

Item	Designation	Material	Weight
			kg (lb)
A	JIS B0202 G ½" (male)	AISI 316L	0.6 (1.32)
B	JIS B0203 R ½" (male)	AISI 316L	0.6 (1.32)

Thread DIN 13, internal membrane, standard (without diaphragm seal)

A

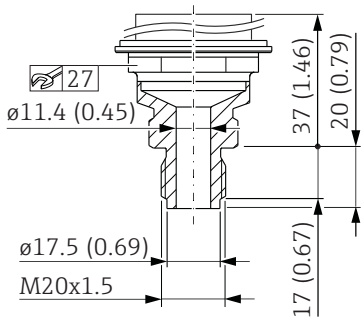

B

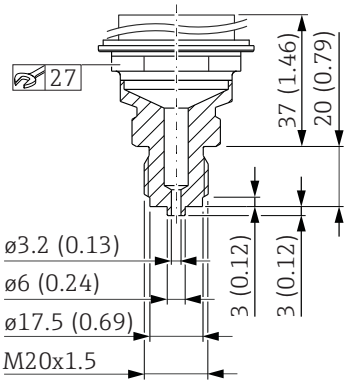

Engineering unit mm (in)

Item	Designation	Material	Weight
			kg (lb)
A	DIN 13 M20 x 1.5 11.4 mm (0.45 in)	AISI 316L	0.6 (1.32)
A	DIN 13 M20 x 1.5 11.4 mm (0.45 in)	Alloy C276 (2.4819)	0.6 (1.32)
B	DIN 13 M20 x 1.5, EN837 3 mm (0.12 in)	AISI 316L	0.6 (1.32)
B	DIN 13 M20 x 1.5, EN837 3 mm (0.12 in)	Alloy C276 (2.4819)	0.6 (1.32)

Flange EN1092-1, flush mount membrane, standard (without diaphragm seal)

Connection dimensions according to EN1092-1.

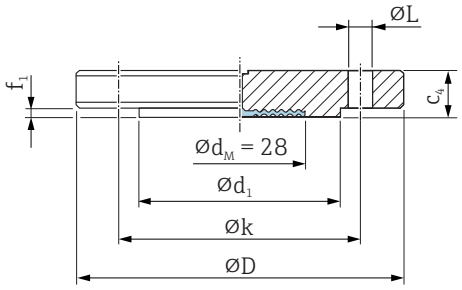

A0045473

ØD Diameter of flange
c_4 Thickness
Ød$_1$ Raised face
f_1 Raised face
Øk Pitch diameter
ØL Diameter of hole
Ød$_M$ Max. diameter of membrane

Engineering unit mm

Flange [1) 2)]							Boltholes			Weight
DN	PN	Form	ØD	c_4	Ød$_1$	f_1	Number	ØL	Øk	
			mm	mm	mm	mm		mm	mm	kg (lb)
DN 25	PN 10-40	B1	115	18	68	2	4	14	85	1.38 (3.04)
DN 32	PN 10-40	B1	140	18	78	2	4	18	100	2.03 (4.48)
DN 40	PN 10-40	B1	150	18	88	3	4	18	110	2.35 (5.18)
DN 50	PN 10-40	B1	165	20	102	3	4	18	125	3.2 (7.06)
DN 80	PN 10-40	B1	200	24	138	3	8	18	160	5.54 (12.22)

1) Material: AISI 316L
2) The raised face of the flange is made from the same material as the membrane.

Flange ASME, flush membrane, standard (without diaphragm seal)

Connection dimensions in accordance with ASME B 16.5, raised face RF

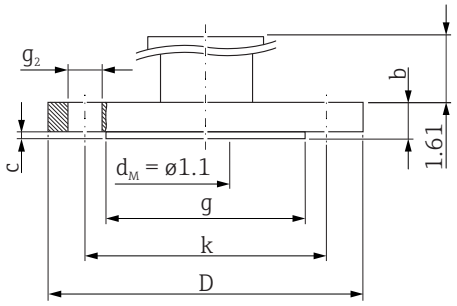

A0022645

D *Diameter of flange*
b *Thickness*
g *Raised face*
c *Thickness of raised face*
k *Pitch diameter*
g_2 *Diameter of hole*
d_M *Max. diameter of the membrane*

Engineering unit in.

Flange [1]						Boltholes			Weight
NPS	Class	D	b	g	c	Quantity	g_2	k	
in		in	in	in	in		in	in	kg (lb)
1	150	4.25	0.61	2.44	0.08	4	0.62	3.13	1.1 (2.43)
1	300	4.88	0.69	2.7	0.06	4	0.75	3.5	1.3 (2.87)
1 ½	150	5	0.69	2.88	0.08	4	0.62	3.88	1.5 (3.31)
1 ½	300	6.12	0.81	2.88	0.08	4	0.88	4.5	2.6 (5.73)
2	150	6	0.75	3.62	0.08	4	0.75	4.75	2.4 (5.29)
2	300	6.5	0.88	3.62	0.08	8	0.75	5	3.2 (7.06)
3	150	7.5	0.94	5	0.08	4	0.75	6	4.9 (10.8)
3	300	8.25	1.12	5	0.08	8	0.88	6.62	6.7 (14.77)
4	150	9	0.94	6.19	0.08	8	0.75	7.5	7.1 (15.66)
4	300	10	1.25	6.19	0.08	8	0.88	7.88	11.6 (25.88)

1) Material: AISI 316/316L; combination of AISI 316 for required pressure resistance and AISI 316L for required chemical resistance (dual rated)

Oval flange

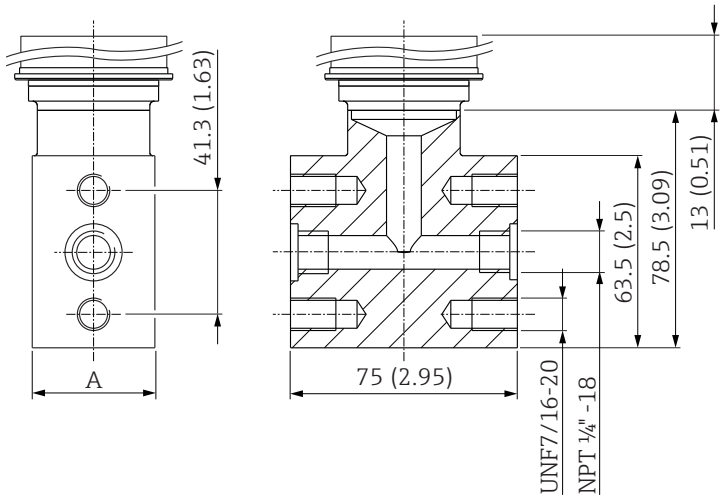

A Sensor <40 bar (600 psi): 40 mm (1.57 in); sensor ≥40 bar (600 psi): 45 mm (1.77 in)

Engineering unit mm (in)

Material	Designation	Weight
		kg (lb)
AISI 316L (1.4404)	Oval flange adapter 1/4-18 NPT as per IEC 61518 Mounting: 7/16-20 UNF	1.9 (4.19)

Thread ISO228, thread ASME, flush membrane, diaphragm seal, TempC

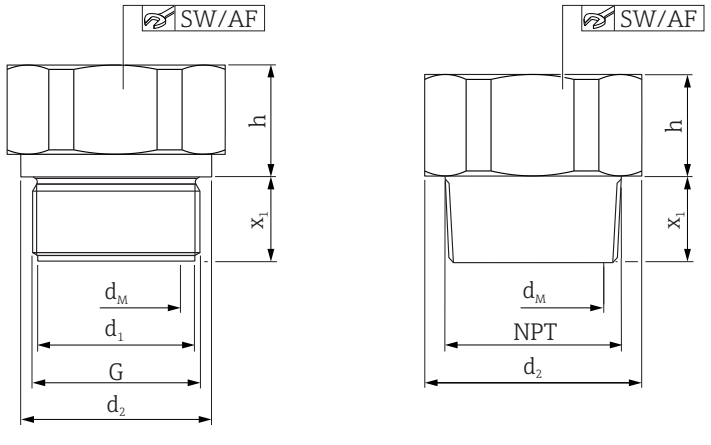

d_1 Diameter
d_2 Diameter
G Thread
x_1 Screw-in length
SW/AF Across flats
d_M Max. diameter of membrane
h Height

Engineering unit mm (in). Left: thread ISO228, right: thread ASME
Schematic diagram, the design may differ.

Thread							Diaphragm seal			
Material	G	PN	d_1	d_2	x_1	SW/AF	d_M	h	Weight	
			[mm]	[mm]	[mm]		[mm]	[mm]	[kg (lb)]	
AISI 316L	G 1" A	400	30	39	21	41	28	19	0.35 (0.77)	
Alloy C276									0.38 (0.84)	
AISI 316L	G 1 ½" A	400	–	55	30	46	41	20	0.73 (1.61)	
Alloy C276									0.79 (1.74)	
AISI 316L	G 2"	400	–	68	30	60	48	20	1.20 (2.65)	
Alloy C276									1.30 (2.87)	

Thread							Diaphragm seal			
Material	MNPT	PN	d_1	d_2	x_1	SW/AF	d_M	h	Weight	
			[mm]	[mm]	[mm]		[mm]	[mm]	[kg (lb)]	
AISI 316L	1" MNPT	400	–	45	23	41	28	16	0.38 (0.84)	
Alloy C276									0.41 (0.90)	
AISI 316L	1 ½" MNPT	400	–	60	30	46	41	20	0.70 (1.54)	
Alloy C276									0.76 (1.68)	
AISI 316L	2" MNPT	400	–	60	34	46	48	21	1.10 (2.43)	
Alloy C276									1.19 (2.62)	

Flange EN1092-1, flush membrane, diaphragm seal

Connection dimensions according to EN1092-1.

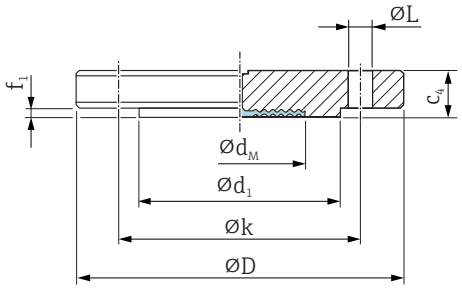

A0045226

ØD Diameter of flange
c_4 Thickness
Ød$_1$ Raised face
f_1 Raised face
Øk Pitch diameter
ØL Diameter of hole
Ød$_M$ Max. diameter of membrane

Engineering unit mm

Flange [1) 2) 3) 4)]							Boltholes			Diaphragm seal
DN	PN	Form	ØD	c_4	Ød$_1$	f_1	Number	ØL	Øk	Weight
			mm	mm	mm	mm		mm	mm	kg (lb)
DN 25	PN 10-40	B1	115	18	68	2	4	14	85	1.38 (3.04)
DN 32	PN 10-40	B1	140	18	78	2	4	18	100	2.03 (4.48)
DN 40	PN 10-40	B1	150	18	88	3	4	18	110	2.35 (5.18)
DN 50	PN 10-40	B1	165	20	102	3	4	18	125	3.2 (7.06)
DN 80	PN 10-40	B1	200	24	138	3	8	18	160	5.54 (12.22)
DN 80	PN 100	B2	230	32	138	3	8	26	180	8.85 (19.51)

1) Material: AISI 316L
2) The roughness of the surface in contact with the medium including the raised face of the flanges (all standards) made of Alloy C276, Monel, tantalum, gold > 316L or PTFE is R_a< 0.8 µm (31.5 µin). Lower surface roughness on request.
3) The flange raised face is made from the same material as the membrane.
4) Supplied with conventional membrane if a PTFE membrane coating is ordered.

Maximum diameter of membrane $Ød_M$

DN	PN	$Ød_M$ (mm)					
		316L TempC	316L	Alloy C276	Tantalum	Monel (Alloy 400)	PTFE
DN 25	PN 10-40	28	-	33	33	33	28
DN 32	PN 10-40	-	34	42	42	34	-
DN 40	PN 10-40	-	38	48	51	42	-
DN 50	PN 10-40	61	-	57	60	59	52
DN 50	PN 100-160	-	52	62	60	59	-
DN 80	PN 10-40	89	-	89	92	89	80
DN 80	PN 100	-	80	90	92	90	-

Flange ASME B16.5, flush membrane, diaphragm seal

Connection dimensions in accordance with ASME B 16.5, raised face RF

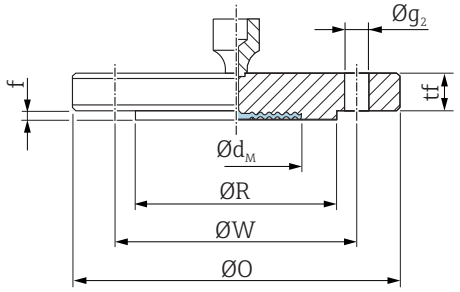

A0045230

ØO Diameter of flange
tf Thickness
ØR Raised face
f Raised face
ØW Pitch diameter
Øg$_2$ Diameter of hole
Ød$_M$ Max. membrane diameter

Engineering unit in

Flange [1) 2) 3)]						Boltholes			Diaphragm seal
NPS	Class	ØO	tf	ØR	f	Quantity	Øg$_2$	ØW	Weight
in		in	in	in	in		in	in	kg (lb)
1	150	4.25	0.50	2	0.06	4	5/8	3.12	1.2 (2.65)
1	300	4.88	0.62	2	0.06	4	3/4	3.5	1.5 (3.31)
1 ½	150	5	0.62	2.88	0.06	4	5/8	3.88	1.6 (3.53)
1 ½	300	6.12	0.75	2.88	0.06	4	7/8	4.5	2.7 (5.95)
2	150	6	0.69	3.62	0.06	4	3/4	4.75	2.5 (5.51)
2	300	6.5	0.81	3.62	0.06	8	3/4	5	3.4 (7.5)
3	150	7.5	0.88	5	0.06	4	3/4	6	5.1 (11.25)
3	300	8.25	1.06	5	0.06	8	7/8	6.62	7.0 (15.44)

1) Material AISI 316/316L: Combination of AISI 316 for necessary pressure resistance and AISI 316L for necessary chemical resistance (dual rated)
2) The roughness of the surface in contact with the medium including the raised face of the flanges (all standards) made of Alloy C276, Monel, tantalum, gold or PTFE is R_a< 0.8 µm (31.5 µin). Lower surface roughness on request.
3) The flange raised face is made from the same material as the membrane.

Maximum diameter of membrane $Ød_M$

NPS	Class	$Ød_M$ (in)				
		316L TempC	316L	Alloy C276	Tantalum	Monel (Alloy 400)
1	150	1.10	-	1.30	1.34	1.30
1	300	1.10	-	1.30	1.34	1.30
1 ½	150	-	1.50	1.89	2.01	1.89
1 ½	300	-	1.50	1.89	2.01	1.89
2	150	2.40	-	2.44	2.44	2.44
2	300	2.40	-	2.44	2.44	2.44
3	150	3.50	-	3.62	3.62	3.62
3	300	3.50	-	3.62	3.62	3.62

Flange JIS, flush membrane, diaphragm seal

Connection dimensions in accordance with JIS B 2220 BL, raised face RF.

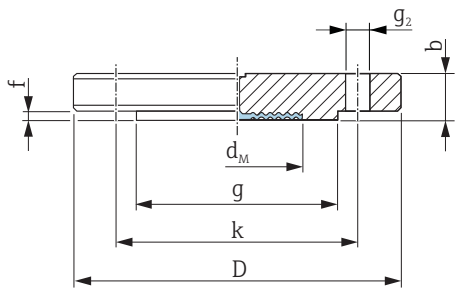

A0021680

D *Diameter of flange*
b *Thickness*
g *Raised face*
f *Thickness of raised face*
k *Pitch diameter*
g_2 *Diameter of hole*

Engineering unit mm

Flange [1) 2) 3)]						Boltholes			Diaphragm seal
A [4)]	K [5)]	D	b	g	f	Number	g_2	k	Weight
		mm	mm	mm	mm		mm	mm	kg (lb)
50 A	10 K	155	16	96	2	4	19	120	2.3 (5.07)
80 A	10 K	185	18	127	2	8	19	150	3.3 (7.28)
100 A	10 K	210	18	151	2	8	19	175	4.4 (9.7)

1) Material: AISI 316L
2) The roughness of the surface in contact with the medium, including the raised face of the flanges (all standards) made of Alloy C276, Monel, tantalum, gold or PTFE, is R_a< 0.8 µm (31.5 µin). Lower surface roughness on request.
3) The flange raised face is made from the same material as the membrane.
4) Alphanumeric designation of the flange size.
5) Alphanumeric pressure rating of a component.

Maximum diameter of membrane Ød_M

A [1)]	K [2)]	Ød_M (mm)					
		316L TempC	316L	Alloy C276	Tantalum	Monel (Alloy 400)	PTFE
50 A	10 K	-	52	62	60	59	-
80 A	10 K	-	80	-	-	-	-
100 A	10 K	-	80	-	-	-	-

1) Alphanumeric designation of the flange size.
2) Alphanumeric pressure rating of a component.

Separator, thread, ISO228, ASME, DIN, welded, diaphragm seal, TempC

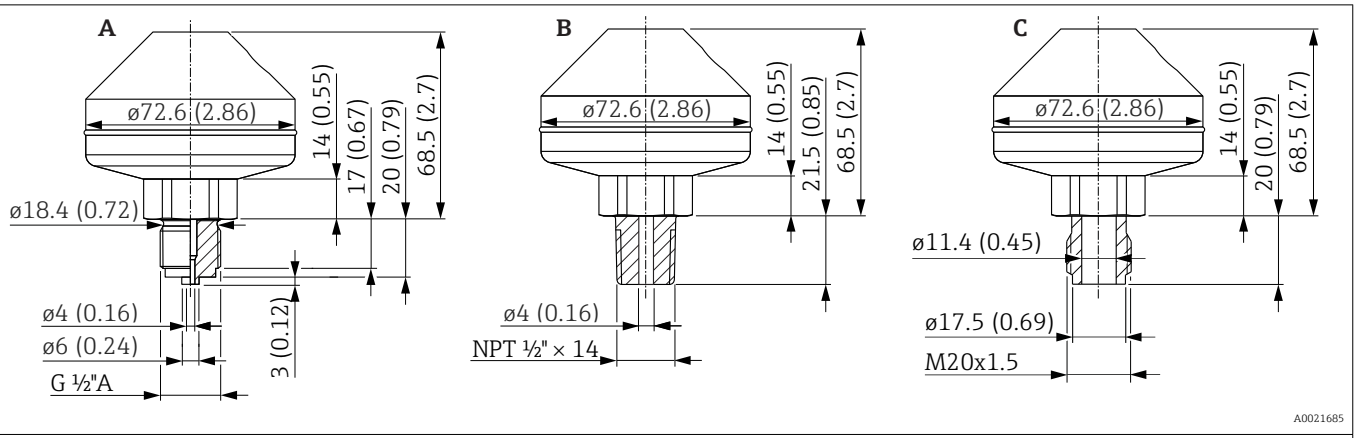

Engineering unit mm (in)

Item	Designation	Material	Measuring range	PN	Weight
			bar (psi)		kg (lb)
A	Welded, ISO228 G ½ A EN837	AISI 316L	≤ 160 (2320)	PN 160	1.43 (3.15)
B	Welded, ANSI MNPT ½				
C	Welded, thread DIN 13 M20x1.5				

Weight

Housing

Weight including electronics and display.

- Single compartment housing: 1.1 kg (2.43 lb)
- Dual compartment housing
  Aluminum: 1.4 kg (3.09 lb)

Sensor, remote (separate housing)

- Housing: see the Housing section
- Housing adapter: 0.55 kg (1.21 lb)
- Process connection adapter: 0.36 kg (0.79 lb))
- Cable:
  - PE cable, 2 meters: 0.18 kg (0.40 lb)
  - PE cable, 5 meters: 0.35 kg (0.77 lb)
  - PE cable, 10 meters: 0.64 kg (1.41 lb)
  - FEP cable, 5 meters: 0.62 kg (1.37 lb)
- Mounting bracket: 0.46 kg (1.01 lb)

Temperature isolator

- Temperature isolator, short: 0.19 kg (0.42 lb)
- Temperature isolator, long: 0.34 kg (0.75 lb)

Capillary

- 316L (standard capillary armor):
  0.16 kg/m (0.35 lb/m) + 0.2 kg (0.44 lb)
  (Weight per capillary in m)
- PVC-coated capillary armor on 316 L:
  0.21 kg/m (0.46 lb/m) + 0.2 kg (0.44 lb)
  (Weight per capillary in m)
- PTFE-coated capillary armor on 316L:
  0.29 kg/m (0.64 lb/m) + 0.2 kg (0.44 lb)
  (Weight per capillary in m)

Process connections

Weight, see the specific process connection.

Ex d version: 0.63 kg (1.39 lb)

Accessories

Mounting bracket: 0.5 kg (1.10 lb)

Materials in contact with process

Membrane material

- 316L (1.4435)
- 316L (1.4435), TempC
  TempC membrane stands for "Temperature Compensatory Membrane"
  This membrane reduces the process and environmental influences for diaphragm seals compared to conventional systems
- Alloy C276
  The flange raised face is made from the same material as the membrane
- Tantalum
  The flange raised face is made from the same material as the membrane
- Monel (Alloy 400)
  The flange raised face is made from the same material as the membrane

Membrane coating

- PTFE, 0.25 mm (0.01 in)
  PTFE is standard only with conventional membranes
- Standard device (without diaphragm seal): gold, 25 µm
- Device with diaphragm seal: gold, 25 µm
  The gold-plated TempC membrane does not offer any corrosion protection!
  Gold is standard only for TempC membranes

Process connections

See the specific process connection.

Accessories

For technical data (e.g. materials, dimensions or order numbers), see the accessory document SD01553P.

Materials not in contact with process

Single compartment housing, aluminum, coated

- Housing: aluminum EN AC 43400
- Housing coating, cover: polyester
- EN AC-43400 aluminum cover with Lexan 943A PC sight glass
  EN AC-443400 aluminum cover with borosilicate sight glass; dust-Ex for Ex d/XP
- Dummy cover: aluminum EN AC 43400
- Cover sealing materials: HNBR
- Cover sealing materials: FVMQ (in low temperature version only)
- Potential equalization: 316L
- Seal under potential equalization: EPDM
- Plug: PBT-GF30-FR or aluminum
- Plug sealing material: EPDM
- Nameplate: plastic foil
- TAG plate: plastic foil, stainless steel or provided by the customer

The cable entry (material: Stainless steel, nickel-plated brass, plastic) can be ordered via the "Electrical connection" product structure.

Dual compartment housing, aluminum, coated

- Housing: aluminum EN AC 43400
- Housing coating, cover: polyester
- EN AC-43400 aluminum cover with Lexan 943A PC sight glass
  EN AC-443400 aluminum cover with borosilicate sight glass; dust-Ex for Ex d/XP
- Dummy cover: aluminum EN AC 43400
- Cover sealing materials: HNBR
- Cover sealing materials: FVMQ (in low temperature version only)

- Potential equalization: 316L
- Seal under potential equalization: EPDM
- Plug: PBT-GF30-FR or aluminum
- Plug sealing material: EPDM
- Nameplate: plastic foil
- TAG plate: plastic foil, stainless steel or provided by the customer

The cable entry (material: Stainless steel, nickel-plated brass, plastic) can be ordered via the "Electrical connection" product structure.

Electrical connection

Coupling M20, plastic
- Material: PA
- Seal on cable gland: EPDM
- Dummy plug: plastic

Coupling M20, nickel-plated brass
- Material: nickel-plated brass
- Seal on cable gland: EPDM
- Dummy plug: plastic

Coupling M20, 316L
- Material: 316L
- Seal on cable gland: EPDM
- Dummy plug: plastic

M20 coupling, 316 L, hygiene
- Material: 316L
- Seal on cable gland: EPDM

M20 thread
The device is supplied with M20 thread as standard.
Transport plug: LD-PE

Thread G ½
The device is supplied with an M20 thread as standard and an adapter to G½ including documentation is included.
- Adapter made of PA66-GF or aluminum or 316L (depends on housing version ordered)
- Transport plug: LD-PE

NPT ½ thread
The device is supplied with an NPT½ thread as standard (aluminum housing, 316L housing) or with an M20 thread and an adapter to NPT½ including documentation (plastic housing, hygienic housing).
- Adapter made of PA66-GF or 316L (depends on housing version ordered)
- Transport plug: LD-PE

Thread NPT ¾
The device is supplied with thread NPT ¾ as standard
Transport plug: LD-PE

M20 coupling, blue plastic
- Material: PA, blue
- Seal on cable gland: EPDM
- Dummy plug: plastic

M12 plug
- Material: nickel-plated CuZn or 316L (depends on housing version ordered)
- Transport cap: LD-PE

HAN7D plug
Material: aluminum, die-cast zinc, steel

Valve plug ISO44000 M16
- Material: PA6
- Transport plug: LD-PE

Separate housing

- Mounting bracket
  - Bracket: AISI 316L (1.4404)
  - Screw and nuts: A4-70
  - Half-shells: AISI 316L (1.4404)
- Seal for cable from separate housing: EPDM
- Gland for cable of separate housing: AISI 316L (1.4404)
- PE cable for separate housing: abrasion-proof cable with strain-relief Dynema members; shielded using aluminum-coated foil; insulated with polyethylene (PE-LD), black; copper wires, twisted, UV-resistant
- FEP cable for separate housing: abrasion-proof cable; shielded using galvanized steel wire netting; insulated with fluorinated ethylene propylene (FEP), black; copper cores, twisted, UV-resistant
- Process connection adapter for separate housing: AISI 316L (1.4404)

Fill fluid

- Silicone oil
- Silicone oil, FDA 21 CFR 175.105
- Synthetic oil, FDA
- Vegetable oil, FDA 21 CFR 172.856
- High-temperature oil
- Low-temperature oil
- Inert oil (not suitable for temperatures below −20 °C (−4 °F))

Connecting parts

- Connection between housing and process connection: AISI 316L (1.4404)
- Measuring cell body: AISI 316L (1.4404)
- Connection between measuring cell body and capillary: AISI 316L (1.4404)
- Heat shrink tube (only available for capillary with PTFE capillary armor or PVC-coated capillary armor): polyolefin

Armor for capillary

AISI 316L

- Capillary: AISI 316 Ti (1.4571)
- Protective hose for capillary: AISI 316L (1.4404)

PVC-coated

- Capillary: AISI 316 Ti (1.4571)
- Protective hose for capillary: AISI 316L (1.4404)
- Coating: PVC
- Heat shrink tube at capillary junction: polyolefin

PTFE-armored

- Capillary: AISI 316 Ti (1.4571)
- Protective hose for capillary: AISI 316L (1.4404)
- Armor: PTFE
- Single-ear clamp: 1.4301

Accessories

For technical data (e.g. materials, dimensions or order numbers), see the accessory document SD01553P.

Display and user interface

Operating concept (not for devices with 4 to 20 mA analog)

Operator-oriented menu structure for user-specific tasks
- User navigation
- Diagnostics
- Application
- System

Fast and safe commissioning
- Interactive wizard with graphical user interface for guided commissioning in FieldCare, DeviceCare or DTM, AMS and PDM-based third-party tools or SmartBlue
- Menu guidance with short explanations of the individual parameter functions
- Standardized operation at the device and in the operating tools
- PROFINET with Ethernet-APL: access to the device via Web server

Efficient diagnostic behavior increases measurement availability
- Remedial measures are integrated in plain text
- Diverse simulation options

Bluetooth module (optionally integrated in local display)
- Quick and easy setup with SmartBlue app or PC with DeviceCare, version 1.07.00 and higher, or FieldXpert SMT70
- No additional tools or adapters required
- Encrypted single point-to-point data transmission (tested by Fraunhofer Institute) and password-protected communication via *Bluetooth*® wireless technology

Local operation

Operating keys and DIP switches on the electronic insert

Analog 4 to 20 mA

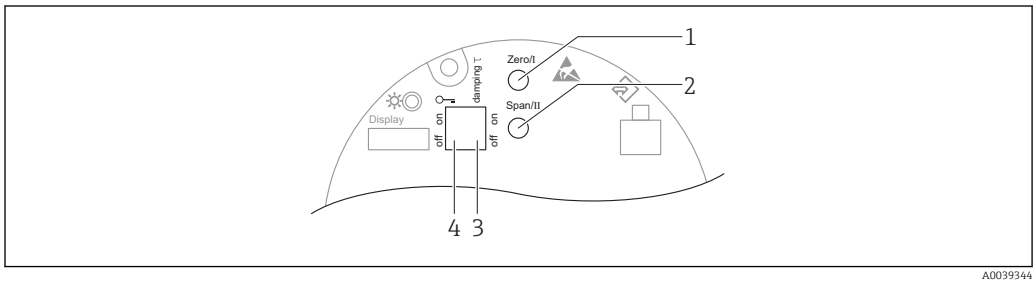

A0039344

1 Operating key for lower range value (Zero)
2 Operating key for upper range value (Span)
3 DIP switch for damping
4 DIP switch for locking and unlocking the device

HART

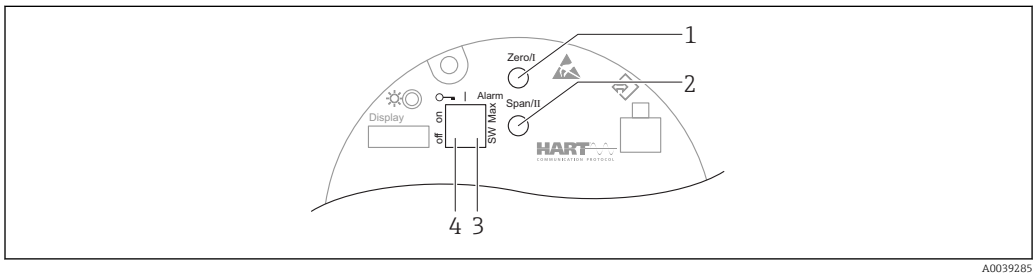

A0039285

1 Operating key for lower range value (Zero)
2 Operating key for upper range value (Span)
3 DIP switch for alarm current
4 DIP switch for locking and unlocking the device

The setting of the DIP switches has priority over the settings made via other operation methods (e.g. FieldCare/DeviceCare).

PROFINET with Ethernet-APL

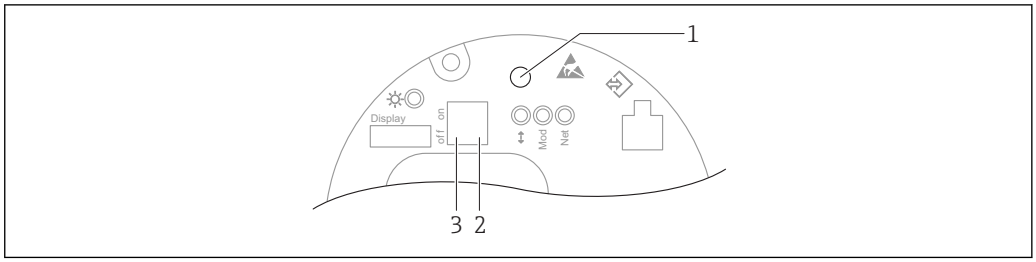

A0046061

1 Operating key for position adjustment (zero point correction) and device reset
2 DIP switch for setting the service IP address
3 DIP switch for locking and unlocking the device

The setting of the DIP switches has priority over the settings made via other operation methods (e.g. FieldCare/DeviceCare).

Local display

Device display (optional)

Functions:
Display of measured values and fault and notice messages

The device displays are available with the additional option of Bluetooth® wireless technology.

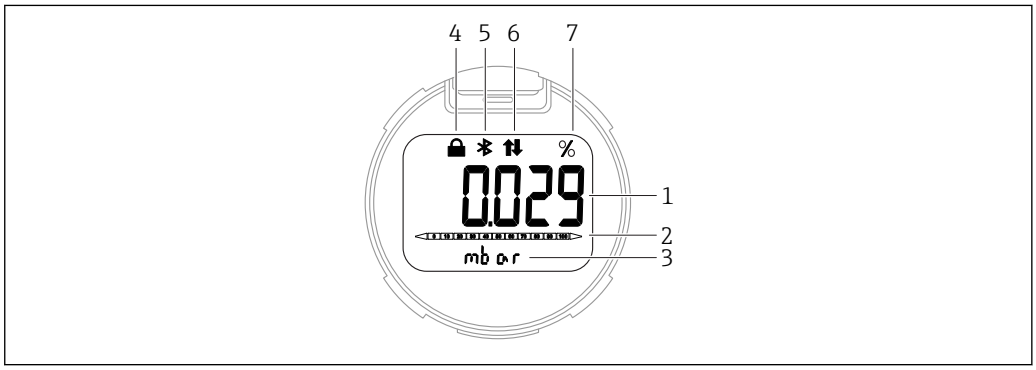

A0043599

8 Segment display

1 Measured value (up to 5 digits)
2 Bar graph proportional to the current output (not for PROFINET with Ethernet-APL)
3 Unit of measured value
4 Locked (symbol appears when the device is locked)
5 Bluetooth (symbol flashes if Bluetooth connection is active) (only HART and PROFINET with Ethernet-APL)
6 HART communication (symbol is displayed if HART communication is active) , or communication via PROFINET is active (only HART and PROFINET with Ethernet-APL)
7 Measured value output in %

Remote operation

Via HART protocol or Bluetooth

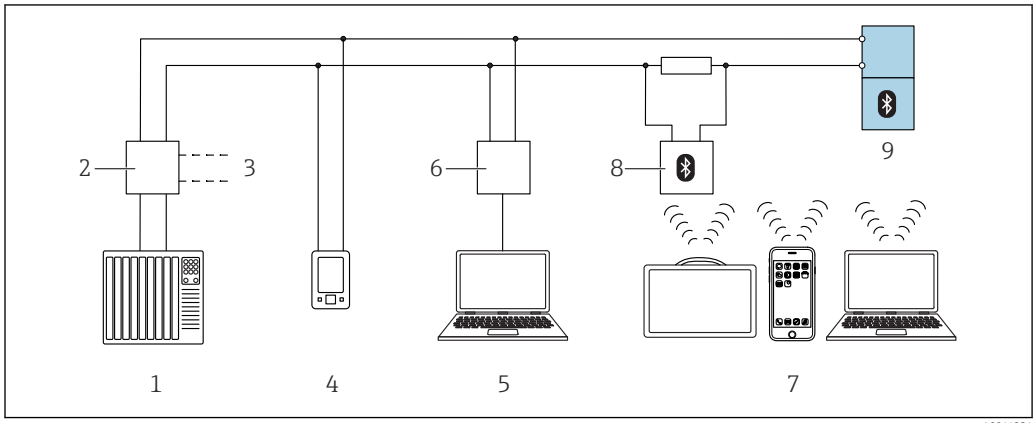

9 Options for remote operation via HART protocol

1 *PLC (programmable logic controller)*
2 *Transmitter power supply unit, e.g. RN221N (with communication resistor)*
3 *Connection for Commubox FXA195 and AMS Trex™ device communicator*
4 *AMS Trex™ device communicator*
5 *Computer with operating tool (e.g. DeviceCare/FieldCare , AMS Device View, SIMATIC PDM)*
6 *Commubox FXA195 (USB)*
7 *Field Xpert SMT70/SMT77, smartphone or computer with operating tool (e.g. DeviceCare/FieldCare, AMS Device View, SIMATIC PDM)*
8 *Bluetooth modem with connecting cable (e.g. VIATOR)*
9 *Transmitter*

Via PROFINET with Ethernet-APL network

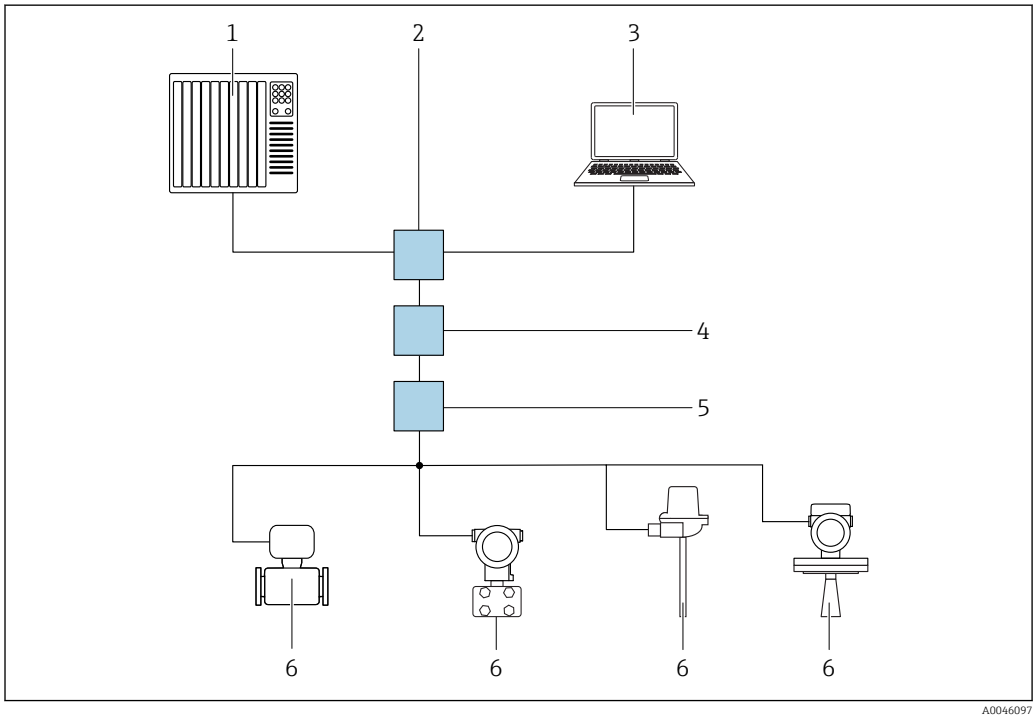

10 Options for remote operation via PROFINET with Ethernet-APL network: star topology

1 *Automation system, e.g. Simatic S7 (Siemens)*
2 *Ethernet switch*
3 *Computer with Web browser (e.g., Microsoft Edge) for accessing the integrated device Web server or computer with operating tool (e.g., FieldCare, DeviceCare, SIMATIC PDM) with iDTM Profinet Communication*
4 *APL power switch (optional)*
5 *APL field switch*
6 *APL field device*

Call up the website via the computer in the network. The IP address of the device must be known.

The IP address can be assigned to the device in a variety of ways:
- Dynamic Configuration Protocol (DCP), factory setting
  The automation system (e.g. Siemens S7) automatically assigns the IP address to the device
- Software addressing
  The IP address is entered via the IP address parameter
- DIP switch for service
  The device then has the fixed IP address 192.168.1.212
  The IP address is only adopted following a restart.
  The IP address can now be used to establish the connection to the network

The default setting is that the device uses the Dynamic Configuration Protocol (DCP). The automation system (e.g. Siemens S7) automatically assigns the IP of the device.

Via Web browser (for devices with PROFINET)

Function scope

Thanks to the integrated Web server the device can be operated and configured via a Web browser. The structure of the operating menu is the same as for the local display. In addition to the measured values, device status information is also displayed and allows users to monitor the status of the device. Furthermore the device data can be managed and the network parameters can be configured.

Via service interface (CDI)

With the Commubox FXA291, a CDI connection is established with the device interface and a Windows PC/notebook with a USB port.

Operation via Bluetooth® wireless technology (optional)

Requirement
- Device with Bluetooth display
- Smartphone or tablet with Endress+Hauser SmartBlue app or PC with DeviceCare from version 1.07.00 or FieldXpert SMT70

The connection has a range of up to 25 m (82 ft). The range can vary depending on environmental conditions such as attachments, walls or ceilings.

System integration

HART

Version 7

PROFINET with Ethernet-APL

PROFINET Profile 4.02

Supported operating tools

Smartphone or tablet with Endress+Hauser SmartBlue (app), DeviceCare, version 1.07.00 and higher, FieldCare, DTM, AMS and PDM.

PC with Web server via fieldbus protocol.

Certificates and approvals

Current certificates and approvals for the product are available at www.endress.com on the relevant product page:

1. Select the product using the filters and search field.
2. Open the product page.
3. Select **Downloads**.

CE mark

The device meets the legal requirements of the relevant EC directives. Endress+Hauser confirms that the device has been successfully tested by applying the CE mark.

RCM-Tick marking

The supplied product or measuring system meets the ACMA (Australian Communications and Media Authority) requirements for network integrity, interoperability, performance characteristics as well as health and safety regulations. Here, especially the regulatory arrangements for electromagnetic compatibility are met. The products bear the RCM-Tick marking on the nameplate.

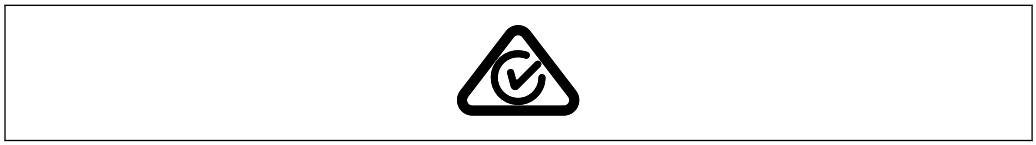

A0029561

Ex approvals

- ATEX
- CSA
- NEPSI
- UKCA
- INMETRO
- KC
- EAC
- JPN
- Combinations of different approvals also

All the data related to explosion protection is provided in separate Ex documentation which is also available upon request. The Ex documentation is supplied as standard with all devices approved for use in explosion hazardous areas.

Additional approvals in preparation.

Explosion-protected smartphones and tablets

If used in hazardous areas, mobile end devices with an Ex approval must be used.

Corrosion test

Standards and test methods:
- 316L: ASTM A262 Practice E and ISO 3651-2 Method A
- Alloy C22 and Alloy C276: ASTM G28 Practice A and ISO 3651-2 Method C
- 22Cr duplex, 25Cr duplex: ASTM G48 Practice A or ISO 17781 and ISO 3651-2 Method C

The corrosion test is confirmed for all wetted and pressure-bearing parts.

A 3.1 material certificate must be ordered as confirmation of the test.

EAC conformity

The device meets the legal requirements of the applicable EAC Directives. These are listed in the corresponding EAC Declaration of Conformity along with the standards applied.

Endress+Hauser confirms successful testing of the device by affixing to it the EAC mark.

Drinking water approval

NSF/ANSI 61 drinking water approval

Overfill protection (in preparation)

The device is tested in accordance with the approval guidelines for overfill protection units (ZG-ÜS:2012-07) as overfill protection as per Section 63 of the German Water Resources Act (WHG).

Functional safety SIL/ IEC 61508 Declaration of Conformity (optional)

The devices with a 4-20 mA output signal have been developed according to the IEC 61508 standard. These devices can be used to monitor the process level and pressure up to SIL 3. For a detailed description of the safety functions, settings and functional safety data, see the "Functional Safety Manual".

Marine approval

- ABS (American Bureau of Shipping)
- LR (Lloyd's Register)
- BV (Bureau Veritas)
- DNV GL (Det Norske Veritas / German Lloyd)

Radio approval

Displays with Bluetooth LE have radio licenses according to CE and FCC. The relevant certification information and labels are provided on display.

CRN approval

A CRN approval (Canadian Registration Number) is available for some device versions. These devices are fitted with a separate plate bearing the following registration numbers:
- Devices without a diaphragm seal: CRN 0F22502.5C
- Devices with a diaphragm seal: CRN 0F24854.5C

In order to obtain a CRN-approved device, a CRN-approved process connection must be ordered along with the option "CRN" in the order code for "Additional approvals".

Test reports

Test, certificate, declarations

- Inspection certificate 3.1, EN10204 (material certificate, wetted metallic parts)
  The selection of this feature for coated process membranes/process connections refers to the metallic base material
- NACE MR0175 / ISO 15156 (wetted metallic parts), declaration
- NACE MR0103 / ISO 17945 (wetted metallic parts), declaration
- AD 2000 (wetted, metallic parts), declaration, excluding membrane
- ASME B31.3 process piping, declaration
- ASME B31.1 power piping, declaration
- Pressure test, internal procedure, test report
- Helium leak test, internal procedure, test report
- PMI test, internal procedure (wetted metallic parts), test report
- Standard device (without a diaphragm seal): penetrant testing ISO23277-1 (PT), wetted/ pressurized metallic parts, test report
- Standard device (without a diaphragm seal): penetrant testing ASME VIII-1 (PT), wetted/ pressurized metallic parts, test report
- Welding documentation, wetted/pressurized seams, declaration

Test reports, declarations and inspection certificates are available in electronic format in the Device Viewer: enter the serial number from the nameplate (www.endress.com/deviceviewer).

Applicable for the order codes "Calibration" and "Test, certificate" .

Product documentation on paper

Test reports, declarations and inspection certificates in hard copy can optionally be ordered with the order option "Product documentation on paper". These documents are supplied with the ordered product.

Calibration

5-point calibration certificate

10-point calibration certificate, traceable to ISO/IEC 17025

Manufacturer declarations

Various manufacturer declarations can be downloaded from the Endress+Hauser website. Other manufacturer declarations can be ordered via the Endress+Hauser sales office.

Downloading the Declaration of Conformity

www.endress.com → Download

Pressure Equipment Directive 2014/68/EU (PED)

Pressure equipment with allowable pressure ≤ 200 bar (2 900 psi)

Pressure equipment (maximum working pressure PS ≤ 200 bar (2 900 psi)) can be classified as pressure accessories according to the Pressure Equipment Directive 2014/68/EU. If the maximum working pressure is ≤ 200 bar (2 900 psi) and the pressurized volume of the pressure equipment is ≤ 0.1 l, the pressure equipment is subject to the Pressure Equipment Directive (see Pressure Equipment Directive 2014/68/EU, Article 4, point 3). The Pressure Equipment Directive only requires that the

pressure equipment shall be designed and manufactured in accordance with the "sound engineering practice of a Member State".

Reasons:

- Pressure Equipment Directive (PED) 2014/68/EU Article 4, point 3
- Pressure equipment directive 2014/68/EU, Commission's Working Group "Pressure", Guideline A-05 + A-06

Note:

A partial examination shall be performed for pressure instruments that are part of a safety instrumented system for the protection of a pipe or vessel from exceeding allowable limits (safety accessory in accordance with Pressure Equipment Directive 2014/68/EU, Article 2, point 4).

Pressure equipment with allowable pressure > 200 bar (2 900 psi)

Pressure equipment designated for application in every process fluid having a pressurized volume of <0.1 l and a max. allowable pressure PS > 200 bar (2 900 psi) must satisfy the essential safety requirements set out in Annex I of the Pressure Equipment Directive 2014/68/EU. According to Article 13 pressure equipment shall be classified by category in accordance with Annex II. Taking into account the low volume specified above, the pressure instruments can be categorized as category I pressure equipment. These devices must then bear the CE marking.

Reasons:

- Pressure Equipment Directive 2014/68/EU, Article 13, Annex II
- Pressure equipment directive 2014/68/EU, Commission's Working Group "Pressure", Guideline A-05

Note:

A partial examination shall be performed for pressure instruments that are part of a safety instrumented system for the protection of a pipe or vessel from exceeding allowable limits (safety accessory in accordance with Pressure Equipment Directive 2014/68/EU, Article 2, point 4).

The following also applies:

- Devices with thread and internal membrane PN > 200:
  Suitable for stable gases in group 1, category I, module A
- Devices with separators PN 400:
  Suitable for stable gases in group 1, category I, module A

Oxygen application

Verified cleaned, suitable for O2 service (wetted parts)

China RoHS symbol

The device is visibly identified according to SJ/T 11363-2006 (China-RoHS).

RoHS

The measuring system complies with the substance restrictions of the Restriction on Hazardous Substances Directive 2011/65/EU (RoHS 2).

Certification PROFINET with Ethernet-APL

PROFINET with Ethernet-APL interface

The device is certified and registered by the PNO (PROFIBUS Nutzerorganisation e.V. / PROFIBUS User Organization). The measuring system meets all the requirements of the following specifications:

- Certified according to:
  - Test specification for PROFINET devices
  - PROFINET Security Level – Netload Class
- The device can also be operated with certified devices of other manufacturers (interoperability)

Additional certification

Classification of process seal between electrical systems and (flammable or combustible) process liquids in accordance with UL 122701 (formerly ANSI/ISA 12.27.01)

Endress+Hauser devices are designed according to UL 122701 (formerly ANSI/ISA 12.27.01) which means that users do not need and can save on external secondary process seals in the pipe as required in the process seal sections of ANSI/NFPA 70 (NEC) and CSA 22.1 (CEC). These devices comply with North American installation practice and allow very safe and cost-effective installation for pressurized applications with hazardous fluids. The devices are assigned "single seal" as follows:

CSA C/US IS, XP, NI:

400 bar (6 000 psi)

Further information can be found in the control drawings of the relevant devices.

Metrological approval

If you select the "China" order option, the device is delivered with a Chinese nameplate according to the Chinese Quality Act.

Ordering information

Ordering information

Detailed ordering information is available from the nearest sales organization www.addresses.endress.com or in the Product Configurator under www.endress.com:

1. Select the product using the filters and search field.
2. Open the product page.

The **Configuration** button opens the Product Configurator.

Product Configurator - the tool for individual product configuration
- Up-to-the-minute configuration data
- Depending on the device: direct input of information specific to the measuring point, such as the measuring range or operating language
- Automatic verification of exclusion criteria
- Automatic creation of the order code and its breakdown in PDF or Excel output format
- Ability to order directly in the Endress+Hauser Online Shop

Scope of delivery

The scope of delivery comprises:
- Device
- Optional accessories

Accompanying documentation:
- Brief Operating Instructions
- Final inspection report
- Additional Safety Instructions for devices with approvals (e.g. ATEX, IECEx, NEPSI, etc.)
- Optional: factory calibration form, test certificates

The Operating Instructions are available on the Internet at:

www.endress.com → Download

Service

The following services, among others, can be selected using the Product Configurator.

- Cleaned of oil+grease (wetted)
- Verified cleaned, suitable for O2 applic. (wetted)
- PWIS-free (paint-wetting impairment substances)
  (The plastic protective cover is excluded from the PWIS cleaning)
- ANSI Safety Red coating, coated housing cover
- Set HART burst mode PV
- Set max. alarm current
- Bluetooth communication is disabled on delivery
- Product documentation on paper
  As an option, test reports, declarations and material test certificates can be ordered as a paper printout using the feature **Service**, format**Product documentation on paper**. The required documents can be selected under the feature **Test, certificate, declaration** and are then included with the device on delivery.

Measuring point (tag)

- Order code: marking
- Option: Z1, tagging (TAG), see additional specification
- Location of tag identifier: to be selected in the additional specifications
  - Tag plate, stainless steel
  - Self-adhesive paper label
  - Supplied plate
  - RFID TAG
  - RFID TAG + tag plate stainless steel
  - RFID TAG + self-adhesive paper label
  - RFID TAG + supplied label/plate
- Definition of tag name: to be defined in the additional specifications
  3 lines, each containing up to maximum 18 characters
  The specified tag name appears on the selected label and/or the RFID TAG
- Identification on electronic nameplate (ENP): 32 digits

Test reports, declarations and inspection certificates

All test reports, declarations and inspection certificates are provided electronically in the *Device Viewer*:
Enter the serial number from the nameplate (www.endress.com/deviceviewer)

Product documentation on paper
Test reports, declarations and inspection certificates in hard copy can optionally be ordered with feature 570 "Service", Version I7 "Product documentation on paper". The documents are then provided with the device upon delivery.

Accessories

Device-specific accessories

Mechanical accessories

- Mounting bracket for housing
- Mounting bracket for block & bleed valves
- Block&Bleed valves:
  - Block&Bleed valves can be ordered as **enclosed** accessories (seal for mounting is enclosed)
  - Block&Bleed valves can be ordered as **mounted** accessories (mounted manifolds are supplied with a documented leak test)
  - Certificates (e.g. 3.1 material certificate and NACE) and tests (e.g. PMI and pressure test) that are ordered with the device apply for the transmitter and the manifold
  - During the operating life of the valves, it may be necessary to re-tighten the pack
- Water pocket pipes (PZW)
- Flushing rings
- Weather protection covers

For technical data (e.g. materials, dimensions or order numbers), see the accessory document SD01553P.

Plug connectors

- Plug connector M12 90 deg, IP67 5m cable, union nut, Cu Sn/Ni
- Plug connector M12, IP67 union nut, Cu Sn/Ni
- Plug connector M12, 90 deg IP67 union nut, Cu Sn/Ni

The IP protection classes are only maintained if the dummy cap is used or the cable is connected.

Weld-in accessory

For details, refer to TI00426F/00/EN "Weld-in adapters, process adapters and flanges".

Device Viewer

All the spare parts for the device, along with the order code, are listed in the *Device Viewer* (www.endress.com/deviceviewer).

Documentation

For an overview of the scope of the associated Technical Documentation, refer to the following:
- *Device Viewer* (www.endress.com/deviceviewer): Enter the serial number from the nameplate
- *Endress+Hauser Operations app*: Enter serial number from nameplate or scan matrix code on nameplate.

Standard documentation

- Technical Information: planning guide
  The document contains all the technical data on the device and provides an overview of the accessories and other products that can be ordered for the device
- Brief Operating Instructions: takes you quickly to the 1st measured value
  The Brief Operating Instructions contain all the essential information from incoming acceptance to initial commissioning
- Operating Instructions: reference manual
  The Operating Instructions contain all the information that is required in the various phases of the life cycle of the device: from product identification, incoming acceptance and storage, to mounting, connection, operation and commissioning through to troubleshooting, maintenance and disposal

Supplementary device-dependent documentation

Additional documents are supplied depending on the device version ordered: Always comply strictly with the instructions in the supplementary documentation. The supplementary documentation is an integral part of the device documentation.

Field of Activities

Document FA00004P

Pressure measurement, powerful devices for process pressure, differential pressure, level and flow

Special Documentation

Document SD01553P

Mechanical accessories for pressure equipment

The documentation provides an overview of available manifolds, oval flange adapters, pressure gauge valves, shutoff valves, water pocket pipes, condensate pots, cable shortening kits, test adapters, flushing rings, Block&Bleed valves and protective roofs.

Registered trademarks

HART®
Registered trademark of the FieldComm Group, Austin, Texas, USA

PROFINET®
Registered trademark of the PROFIBUS User Organization, Karlsruhe, Germany

Bluetooth®
The Bluetooth® wordmark and logos are registered trademarks of Bluetooth SIG, Inc. and any use of these trademarks by Endress+Hauser is licensed. Other trademarks and trade names are those of their respective owners.



www.addresses.endress.com

Endress+Hauser

People for Process Automation