OU5001

Fibre-optic amplifier

OUF-HPKG

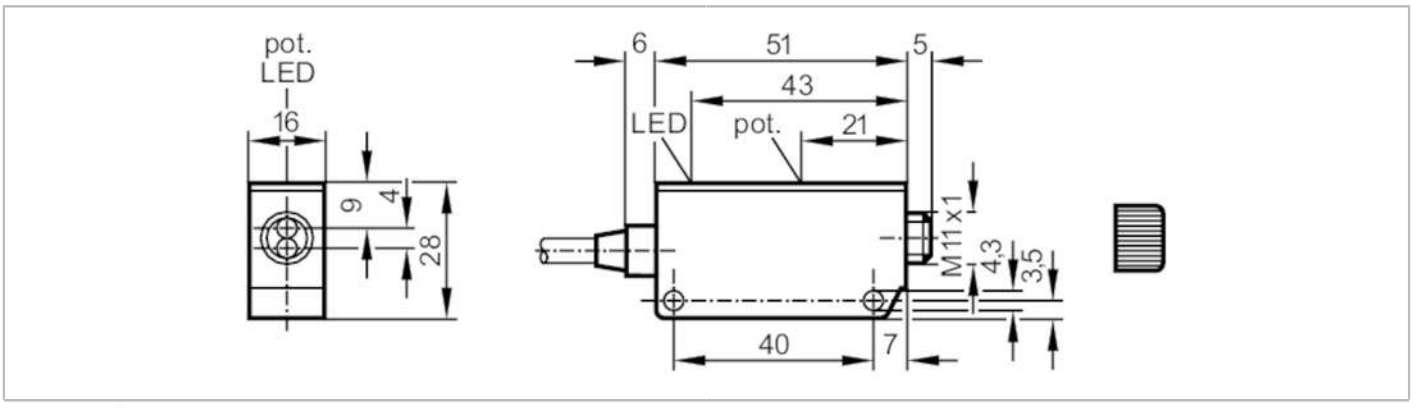

Product characteristics		
Type of light		infrared light
Housing		rectangular
Electrical data		
Operating voltage	[V]	10...36 DC
Current consumption	[mA]	35; ((24 V))
Protection class		II
Reverse polarity protection		yes
Type of light		infrared light
Wave length	[nm]	880
Outputs		
Electrical design		PNP
Output function		light-on mode
Max. voltage drop switching output DC	[V]	2.5
Permanent current rating of switching output DC	[mA]	250
Switching frequency DC	[Hz]	100
Short-circuit protection		yes
Type of short-circuit protection		pulsed
Overload protection		yes
Detection zone		
Range	[m]	< 0.12; (Through-beam sensor)
Range	[mm]	< 40; (Diffuse reflection sensor)
Range adjustable		yes
Operating conditions		
Ambient temperature	[°C]	-25...80
Protection		IP 65
Tests / approvals		
EMC		EN 60947-5-2
MTTF	[years]	653

OU5001

Fibre-optic amplifier

OUF-HPKG

Mechanical data			
Weight	[g]		152
Housing			rectangular
Dimensions	[mm]		28 x 16 x 56
Materials			PPO modified
Lens alignment			side lens

Displays / operating elements		
Display	switching status	1 x LED, yellow

Accessories	
Items supplied	Angle bracket: 1, E20211
	screwdrivers

Remarks	
Remarks	light-on mode corresponds to the NC output function for through-beam fibre optics
	corresponds to the NO output function for diffuse-reflection fibre optics
Pack quantity	1 pcs.

Electrical connection

Cable: 2 m, PVC; 3 x 0.34 mm²

Connection

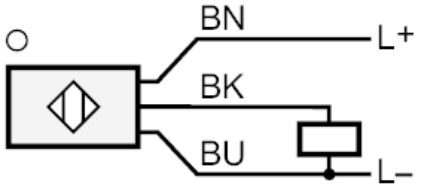

	Core colours :
BN =	brown
BU =	blue
BK =	black

OU5001

Fibre-optic amplifier

OUF-HPKG

Diagrams and graphs

excess gain graph

