PK5524

Pressure switch with intuitive switch point setting

PK-010-RFG14-PSPKG/US/ /W

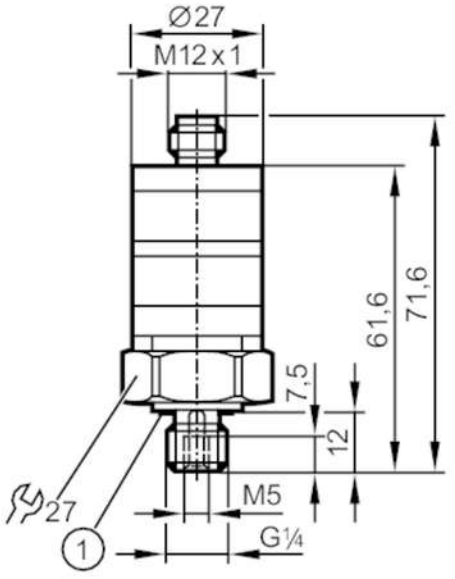

1 Sealing

Product characteristics			
Number of inputs and outputs		Number of digital outputs: 1	
Measuring range		0...10 bar	0...145 psi
Process connection		threaded connection G 1/4 external thread internal thread:M5	
Application			
Application		for industrial applications	
Media		liquids and gases	
Medium temperature	[°C]	-25...80	
Min. bursting pressure		300 bar	4350 psi
Pressure rating		25 bar	362 psi
Type of pressure		relative pressure	
Electrical data			
Operating voltage	[V]	9.6...32 DC	
Current consumption	[mA]	< 25	
Min. insulation resistance	[MΩ]	100; (500 V DC)	
Protection class		III	
Reverse polarity protection		yes	
Inputs / outputs			
Number of inputs and outputs		Number of digital outputs: 1	
Outputs			
Total number of outputs		1	
Output signal		switching signal	
Electrical design		PNP	
Number of digital outputs		1	
Output function		normally open	

PK5524

Pressure switch with intuitive switch point setting

PK-010-RFG14-PSPKG/US/ /W

Max. voltage drop switching output DC [V]		2	
Permanent current rating of switching output DC [mA]		500	
Switching frequency DC [Hz]		100	
Short-circuit protection		yes	
Type of short-circuit protection		pulsed	
Overload protection		yes	
Measuring/setting range			
Measuring range	0...10 bar	0...145 psi	
Set point SP	0.5...10 bar	7.5...145 psi	
Hysteresis	0.2 bar	2.9 psi	
Accuracy / deviations			
Switch point accuracy [% of the final value]	< ± 2,5; (Setting accuracy)		
Repeatability [% of the final value]	< ± 0,5; (with temperature fluctuations < 10 K)		
Characteristics deviation [% of the final value]	< ± 1,5 (BFSL) / < ± 2,5 (LS); (BFSL = Best Fit Straight Line; LS = limit value setting)		
Temperature drift per 10 K	< ± 0.5		
Software / programming			
Adjustment of the switch point	setting ring		
Operating conditions			
Ambient temperature [°C]	-25...80		
Storage temperature [°C]	-40...100		
Protection	IP 67		
Tests / approvals			
EMC	DIN EN 61000-6-2		
	DIN EN 61000-6-3		
Shock resistance	DIN IEC 68-2-27	50 g (11 ms)	
Vibration resistance	DIN IEC 68-2-6	20 g (10...2000 Hz)	
MTTF [years]	576		
Pressure Equipment Directive	Sound engineering practice; can be used for group 2 fluids; group 1 fluids on request		
Mechanical data			
Weight [g]	92.5		
Materials	PBT; PC; FKM; stainless steel (1.4404 / 316L)		
Materials (wetted parts)	stainless steel (1.4404 / 316L); FKM		
Min. pressure cycles	50 million		
Tightening torque [Nm]	25		
Process connection	threaded connection G 1/4 external thread internal thread:M5		
Restrictor element integrated	no (can be retrofitted)		
Displays / operating elements			
Display	operation	LED, green	
	switching status	LED, yellow	

PK5524

Pressure switch with intuitive switch point setting

PK-010-RFG14-PSPKG/US/ /W

With scale	yes

Remarks

Pack quantity	1 pcs.

Electrical connection

Connector: 1 x M12; coding: A



Connection

