PN4226

Pressure sensor with display

PN-2,5-RBN14-HFBOW/LS/ /V

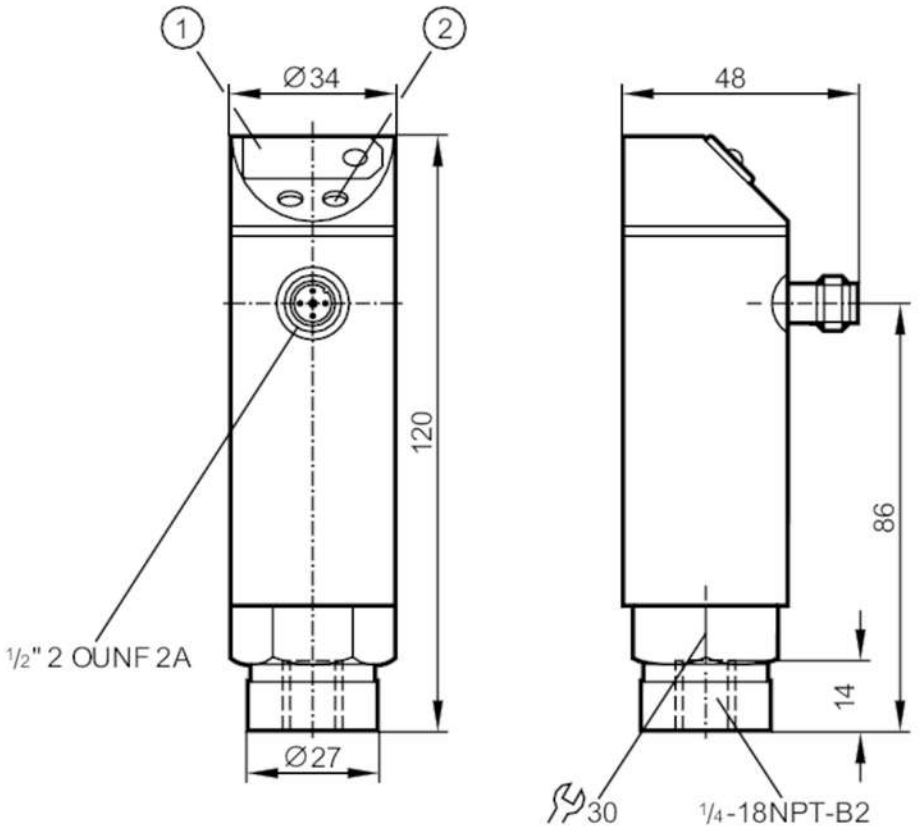

1 7-segment LED display
2 programming button

Product characteristics				
Number of inputs and outputs	Number of digital outputs: 1			
Measuring range	0...2.5 bar	0...2500 mbar	0...36.3 psi	0...250 kPa
Process connection	threaded connection 1/4" NPT internal thread			
Application				
Application	for industrial applications			
Media	liquids and gases			
Medium temperature [°C]	-25...80			
Min. bursting pressure	50 bar	725 psi	5000 kPa	
Pressure rating	20 bar	290 psi	2000 kPa	
Type of pressure	relative pressure			
Electrical data				
Operating voltage tolerance [%]	5...10			
Operating voltage [V]	90...250 AC			
Nominal voltage AC [V]	< 250			
Current consumption [mA]	< 10			
Min. insulation resistance [MΩ]	100; (500 V DC)			
Protection class	II			

PN4226

Pressure sensor with display

PN-2,5-RBN14-HFBOW/LS/ /V

Reverse polarity protection		no			
Power-on delay time	[s]	0.2			
Integrated watchdog		yes			
Inputs / outputs					
Number of inputs and outputs		Number of digital outputs: 1			
Outputs					
Total number of outputs		1			
Output signal		switching signal			
Electrical design		Triac			
Number of digital outputs		1			
Output function		normally open / normally closed; (parameterisable)			
Max. voltage drop switching output AC	[V]	2			
Permanent current rating of switching output AC	[mA]	250; ((...70 °C) 1000 (...60 °C) 1500 (...45 °C) 2500 (...20 °C))			
Switching frequency AC	[Hz]	< 160			
Short-circuit proof		no			
Overload protection		no			
Measuring/setting range					
Measuring range		0...2.5 bar	0...2500 mbar	0...36.3 psi	0...250 kPa
Set point SP		0.02...2.5 bar	0.4...36.3 psi	2...250 kPa	
Reset point rP		0.01...2.49 bar	0.2...36.2 psi	1...249 kPa	
In steps of		0.01 bar	0.1 psi	1 kPa	
Accuracy / deviations					
Switch point accuracy	[% of the span]	< ± 1,0			
Repeatability	[% of the span]	< ± 0,1; (with temperature fluctuations < 10 K)			
Linearity deviation	[% of the span]	< ± 0,5			
Hysteresis deviation	[% of the span]	< ± 0,1			
Long-term stability	[% of the span]	< ± 0,1; (per year)			
Temperature coefficient zero point	[% of the span / 10 K]	< ± 0,2; (-25...80 °C)			
Temperature coefficient span	[% of the span / 10 K]	< ± 0,3; (-25...80 °C)			
Response times					
Delay time programmable dS, dr	[s]	0, 0,2,...10, 11,...50			
Damping process value dAP	[s]	0...4			
Software / programming					
Adjustment of the switch point		programming button			
Parameter setting options		hysteresis / window; normally open / normally closed; switch-on/switch-off delay; Damping; adaptation of displayed values; display can be rotated and switched off; Display unit			

PN4226

Pressure sensor with display

PN-2,5-RBN14-HFBOW/LS/ /V

Operating conditions			
Ambient temperature	[°C]	-25...80	
Storage temperature	[°C]	-40...100	
Protection		IP 65	
Tests / approvals			
EMC		EN 61000-4-2 ESD	4 kV CD / 8 kV AD
		EN 61000-4-3 HF radiated	10 V/m
		EN 61000-4-4 Burst	2 kV
		EN 61000-4-6 HF conducted	10 V
Shock resistance		DIN IEC 68-2-27	50 g (11 ms)
Vibration resistance		DIN IEC 68-2-6	20 g (10...2000 Hz)
MTTF	[years]	224.58	
Pressure Equipment Directive		Sound engineering practice; can be used for group 2 fluids; group 1 fluids on request	
Mechanical data			
Weight	[g]	382.85	
Housing		cylindrical	
Dimensions	[mm]	Ø 34 / L = 120	
Materials		stainless steel (304/1.4301); PC; PBT; PA; FKM	
Materials (wetted parts)		stainless steel (303/1.4305); ceramics; FKM	
Min. pressure cycles		100 million	
Process connection		threaded connection 1/4" NPT internal thread	
Restrictor element integrated		no (can be retrofitted)	
Displays / operating elements			
Display		switching status	LED, red
		function display	7-segment LED display
		measured values	7-segment LED display
Electrical connection			
Required protection		miniature fuse to IEC60127-2 sheet 1; ≤ 5 A; fast acting	
Remarks			
Remarks		n.c. = not used	
Pack quantity		1 pcs.	

Electrical connection

Connector: 1 x 1/2"; coding: C



PN4226

Pressure sensor with display

PN-2,5-RBN14-HFBOW/LS/ /V

Connection

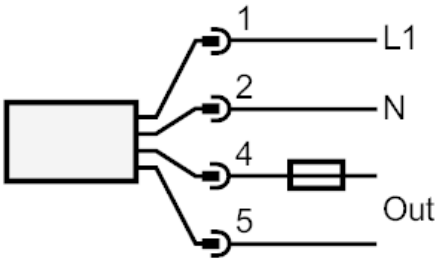

Note miniature fuse to IEC60127-2 sheet 1 ≤ 5 A fast acting