GLC0630T4C1

Four-pole changeover switch, IEC/EN, 630A



Product designation			Changeover Switch
Product type designation			GLC
Number of poles		Nr.	4
Operating voltage type			AC
Contact characteristics			
IEC Conventional free air thermal current Ith		A	630
Rated insulation voltage Ui IEC/EN		V	1000
Rated impulse withstand voltage Uimp		kV	12
Operating current Ie			
AC31B			
	400V	A	630
	500V	A	630
	690V	A	630
AC32B			
	400V	A	630
	500V	A	500
	690V	A	500
AC33B			
	400V	A	630
	500V	A	500
	690V	A	500
Power dissipation per pole max		W	41
Rated operational power AC23A			
	400V	kW	355
	690V	kW	500
Rated short time current (1s) Icw (rms)		kA	12.5
Rated short time current (0.3s) Icw (rms)		kA	20
Conditional short-circuit current (rms)		kA	80
Short-circuit protection with fuse		Class/A	gG/630
Making capacity AC23A 400V		A	6300
Breaking capacity AC23A 400V		A	5040
Mechanical life		cycles	10000
Mechanical features			
Operating position			
	normal		Vertical plan
	allowable		Any
Fixing			Screw
Terminals			
	type		M10 x 25
Tightening torque for terminals			
	min	Nm	30
	max	Nm	37
	min	lbin	265
	max	lbin	327

The characteristics described in this document are subject to updates or modifications at any time. The descriptions, technical and functional information, illustrations and instructions in this brochure are purely illustrative, and are consequently not contractually binding

GLC0630T4C1

Four-pole changeover switch, IEC/EN, 630A

Conductor section			
	IEC min	mm²	1X182
	IEC max	mm²	2X185
	AWG/kcmil min		1X400
	AWG/kcmil max		2X350

Ambient conditions

Operating temperature			
	min	°C	-25
	max	°C	+55
Storage temperature			
	min	°C	-40
	max	°C	+70
Max altitude		m	3000

Dimensions

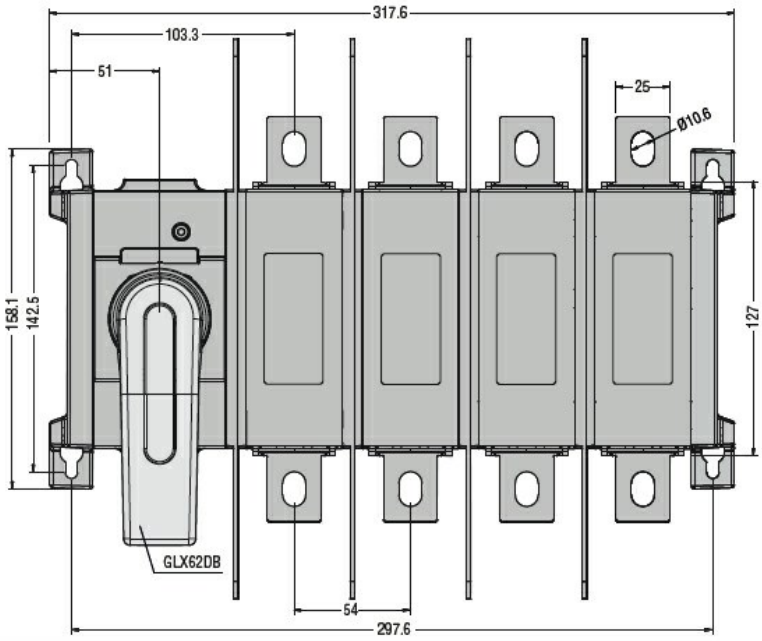

Wiring diagrams

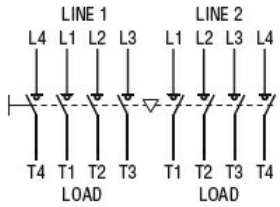

Certifications and compliance

Compliance

IEC/EN 60947-1
IEC/EN 60947-3
IEC/EN 60947-6-1

ETIM classification

ETIM 8.0	EC000216 - Switch disconnector

The characteristics described in this document are subject to updates or modifications at any time. The descriptions, technical and functional information, illustrations and instructions in this brochure are purely illustrative, and are consequently not contractually binding