E10058

Wirable valve connector

VALVE PLUG TYPE A

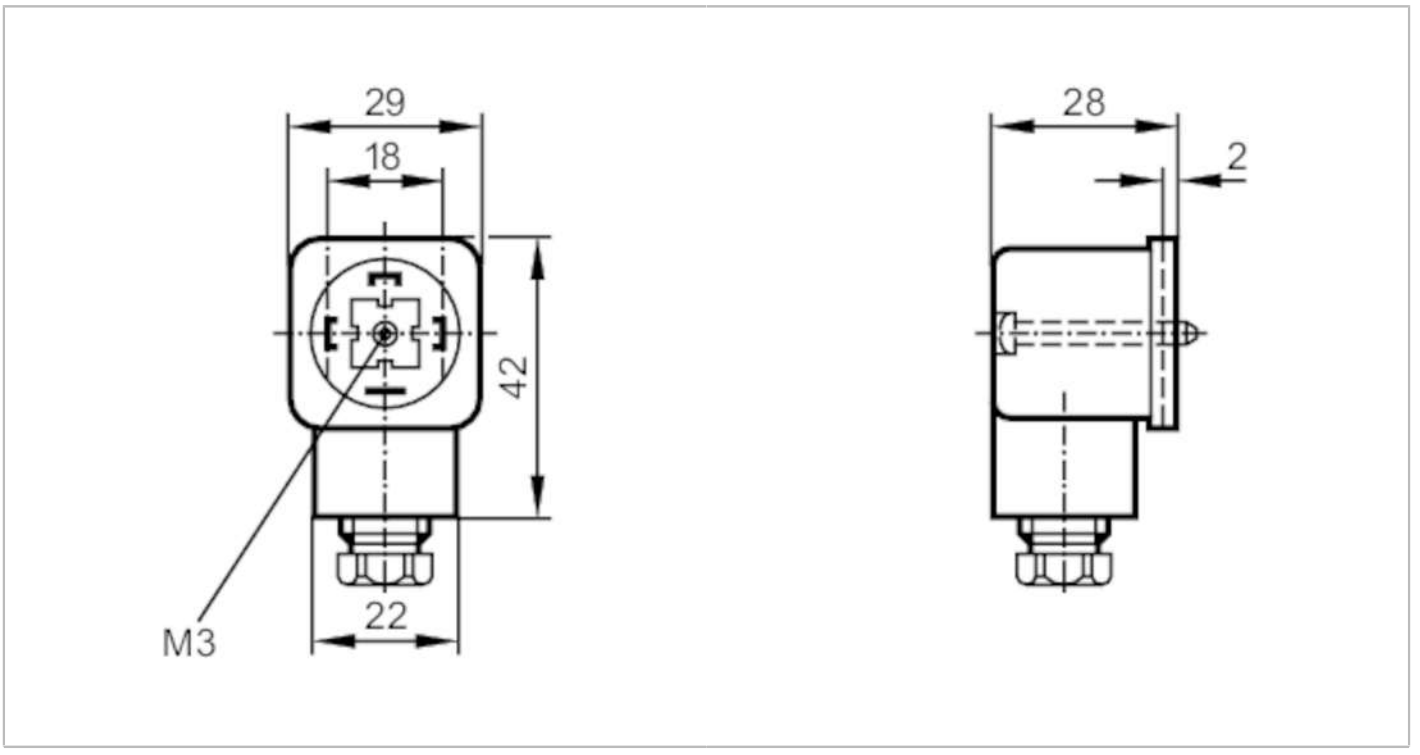

Application		
Special feature		Free from silicone
Free from silicone		yes
Electrical data		
Operating voltage	[V]	< 45 AC / < 70 DC
Max. current load total	[A]	16
Operating conditions		
Ambient temperature	[°C]	-40...125
Protection		IP 65
Mechanical data		
Weight	[g]	28
Dimensions	[mm]	42 x 29 x 28
Materials		PA
Moulded-body material		PA
Remarks		
Pack quantity		1 pcs.

E10058

Wirable valve connector

VALVE PLUG TYPE A

Electrical connection

terminals: ...1.5 mm²; Cable sheath: Ø 6...8 mm

Electrical connection - socket

Connector: 1 x valve plug type A DIN, angled; Moulded body: PA



Connection

