Your Expert Partner for **Human Machine Interfaces**

Terminal cover

Distribution by
Rs-online

704.964.5

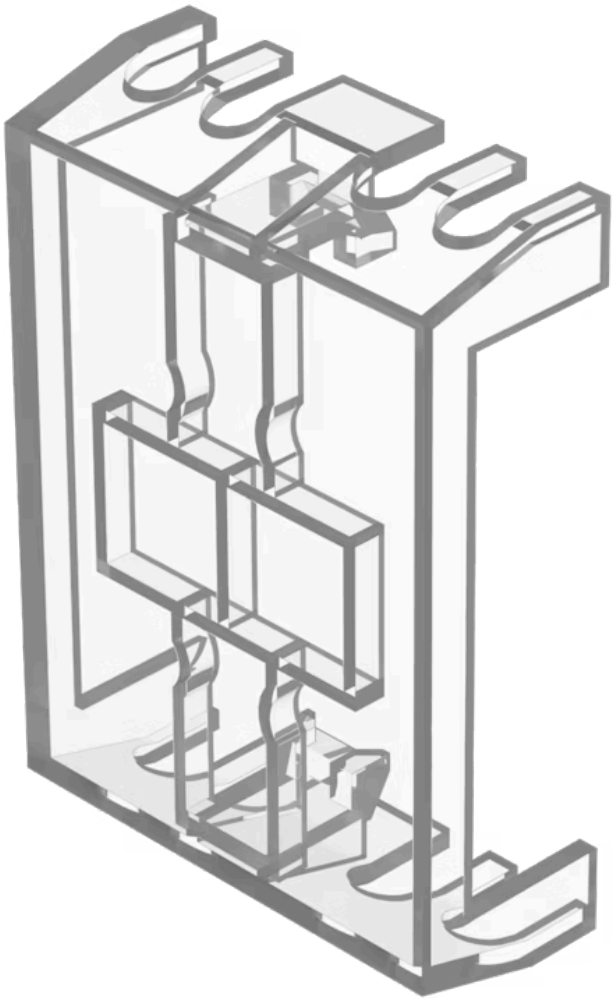

https://rs-online.eao.com/component/704.964.5...

Your product:

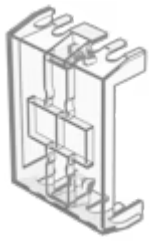

704.964.5
Terminal cover

MECHANICAL CHARACTERISTICS

Terminal:	Screw terminal
Weight:	0.003 kg

OTHER

Short Description:	Terminal cover, Plastic, Screw terminal
Titel Accessory:	Terminal cover
Material:	Plastic
Product attributes:	For covering of screw terminal
Dimension drawings:	

