JN2200

INC-M2M360ABIAKG/US

Inclination sensor

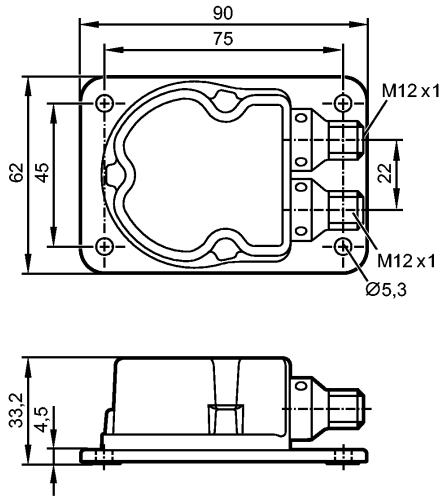

CE IO-Link

Product characteristics		
Inclination sensor		
± 180°		
Self-test function		
IO-Link interface		
Analogue interfaces (voltage / current)		
Analogue / binary outputs		
Application		
Application		2-axis position detection and zero point levelling
Electrical data		
Operating voltage	[V]	9.2...30 DC
Current consumption	[mA]	90 (24 V DC / 25° C) max. 325 mA at 9.2 V and -40° C with heating < 40 mA (24 V) without heating
Reverse polarity protection		yes
Reverse polarity protection		yes
Inputs / outputs		
Inputs / outputs total		4
Outputs		
Digital		
Output function		OUT1: IO-Link / NO / NC programmable; OUT2: NO / NC programmable; PNP / NPN
Max. current load per output	[mA]	125 *)
Voltage drop	[V]	< 2.5
Short-circuit protection		yes
Overload protection		yes
analogue		
current output	[mA]	4...20; (2 mA in case of fault)
Max. load	[Ω]	220 (9.2…15 V) / 500 (15…30 V)
voltage output	[V]	2...10; (1 V in case of fault)
Min. load	[Ω]	10000 (12...13.5 V) / 1000 (13.5...30 V)
Accuracy / deviations		
Accuracy		≤ ± 0.5°

JN2200

INC-M2M360ABIAKG/US

Inclination sensor

Temperature coefficient [1/K]		≤ ± 0.002°
Repeatability		≤ ± 0.1°
Resolution	[°]	0.05
Interfaces		
IO-Link device		
Transfer type		COM2 (38.4 kBaud)
IO-Link revision		V1.1
SDCI standard		IEC 61131-9 CDV
IO-Link device ID		416 / 0x0001A0
Profiles		Smart Sensor: Process Data Variable; Device Identification, Device Diagnosis
SIO mode		yes
Required master port class		A
Process data analogue		2
Process data binary		2
Min. process cycle time	[ms]	5
Programming options		angle (X/Y) / vibration (Veff / aPeak); hysteresis / window; switch points; output logic; fault signalling; self-test; current/voltage output
Environment		
Ambient temperature	[°C]	-40...85
Storage temperature	[°C]	-40...85
Protection		IP 65 / IP 67 / IP 68 / IP 69K
Tests / approvals		
EMC		DIN EN 61000-4-2 ESD: 4 kV CD / 8 kV AD DIN EN 61000-4-3 HF radiated: 10 V/m DIN EN 61000-4-4 Burst: 2 kV DIN EN 61000-4-6 HF conducted: 10 V
Shock resistance		DIN EN 60068-2-27: 100 g (1 ms) / 1000 Impacts per axis (X/Y)
Salt spray test		DIN EN ISO 9227
MTTF	[Years]	229
Mechanical data		
Limit frequency [Hz]		adjustable: 10, 5, 1, 0.5
Linearity devation [°]		± 0.2
Number of measurement axes		2
Housing materials		housing: diecast zinc nickel-plated
Weight	[kg]	0.469
Angular range		± 180°
Displays / operating elements		
Operation	LED	green
Function display	LED	yellow (switch point)
Electrical connection		
Connection		2 x M12 connector

Wiring

plug M12 left
1: L+ 24 V DC (+Ub-D)
2: OUT 2 Switching output 2
3: L - GND

plug M12 right
1: L+ 24 V DC (+Ub-A)
2: A2 analogue output 2
3: L - GND



JN2200

INC-M2M360ABIAKG/US

Inclination sensor

4: OUT 1 Switching output 1 or IO-Link	4: A1 analogue output 1

Remarks

Remarks	*) 125 mA (85° C); 200 mA (60° C); 250 mA (40° C)
Pack quantity [piece]	1

Other data

Measuring and setting range

Inclination measurement	x axis			
			min.	max.
Set point	SP1	[°]	-179.00	180.00
Reset point	rP1	[°]	-180.00	179.00
Analogue start point	ASP1	[°]	-180.00	179.00
Analogue end point	AEP1	[°]	-179.00	180.00
In steps of		[°]	0.01	
Inclination measurement	y axis			
Set point	SP2	[°]	-179.00	180.00
Reset point	rP2	[°]	-180.00	179.00
Analogue start point	ASP2	[°]	-180.00	179.00
Analogue end point	AEP2	[°]	-179.00	180.00
In steps of		[°]	0.01	
Vibration measurement	v eff			
			min.	max.
Set point	SP1	[mm/s]	10	32000
Reset point	rP1	[mm/s]	0	31990
Analogue start point	ASP3	[mm/s]	0	31990
Analogue end point	AEP3	[mm/s]	10	32000
In steps of		[mm/s]	0.1	
Vibration measurement	a peak			
Set point	SP2	[mg]	1	16000
Reset point	rP2	[mg]	0	15999
Analogue start point	ASP4	[mg]	0	15999
Analogue end point	AEP4	[mg]	1	16000
In steps of		[mg]	1	