Rolled knuckle continuous hinge - 35 mm width

Model : 40-1-3324



Opening angle 270°. Other lengths and pin materials are available on request.
Specific drilling requirements are also available on request.

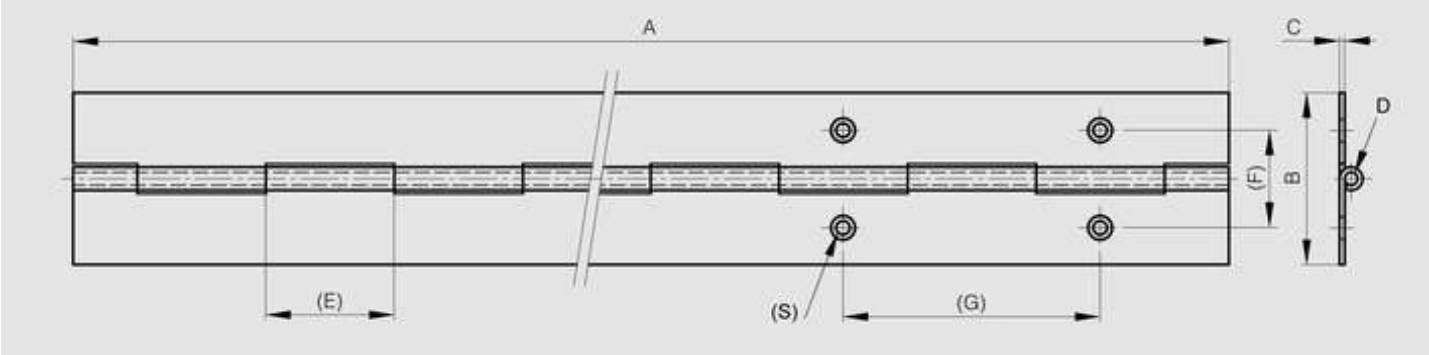

© PINET INDUSTRIE 2014

Material	steel
Finish	raw
A (length)	2040
D (pin diameter)	2
B (width)	35
C	1
Weight (g)	680
E	15
G (pitch)	60
F (pitch)	19.5
Opening angle	270
Note	drilled
S	4.5
Material	steel
Functions	continuous hinges
Pin material	steel

© PINET INDUSTRIE 2014