General engineering puller kit



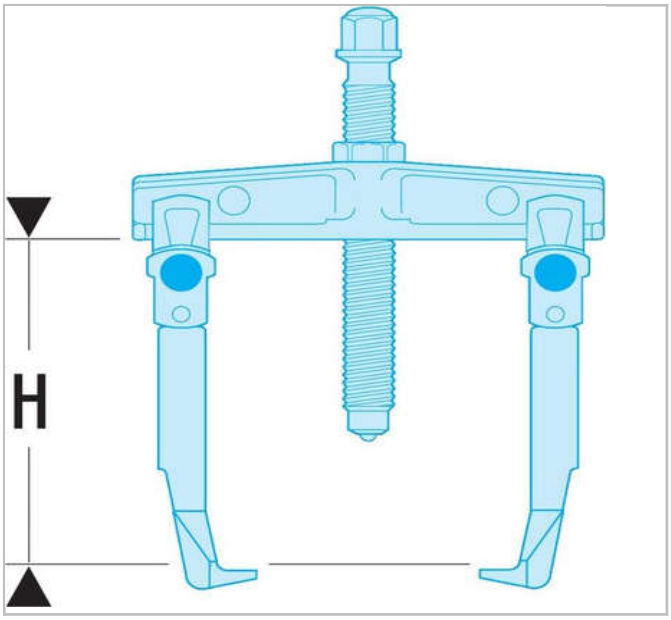

Description:

● Comprising: - 1 sliding leg puller = U.32T6-20 outside grip (spread 20 to 200 mm) / inside grip (spread 130 to 290 mm). - 1 separator U.53T2 (spread 15 to 110 mm) and the beam U.53K2. - 4 clamps U.49P5 to U.49P8 (spread 18 to 50 mm). - 1 slide hammer U.306M with adaptor tip U.49BR1. - 1 jack U.33A (capacity 30 tonnes).
● Presented on the PK.1 panel.

© FACOM 2020

	WIDTH l [mm]	Length L [mm]	Length [mm]	Weight [Kg]
U.JA3	444.0	444.0	888.0	15.5

© FACOM 2020