WIRING DIAGRAM

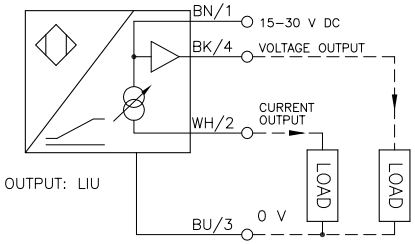

LOCKNUT LN–M30

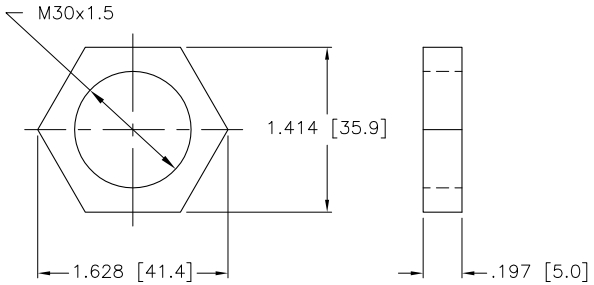

SPECIFICATIONS

MEASURING RANGE [A...B]	2.0–12.0 mm
MIN. REPEAT ACCURACY	≤1%
MAX. RELATIVE TEMPERATURE DRIFT	≤ ±.06%/C°
OPERATING TEMPERATURE	–10°C to +70°C (–14°F to +158°F)
OPERATING VOLTAGE	15–30 VDC
RIPPLE	≤10%
NO–LOAD CURRENT	≤8 mA
RATED INSULATION VOLTAGE	≤0.5 kV
OUTPUT FUNCTION	4–WIRE, ANALOG
SHORT–CIRCUIT PROTECTED	YES
WIRE–BREAK PROTECTION	INCORPORATED
REVERSE POLARITY PROTECTION	INCORPORATED
VOLTAGE OUTPUT	0–10 V
CURRENT OUTPUT	0–20 mA
LINEARITY TOLERANCE	≤ 3% OF FINAL VALUE
VOLTAGE OUTPUT LOAD RESISTANCE	≥ 4.7 kΩ
CURRENT OUTPUT LOAD RESISTOR	≤ 0.4 kΩ
READING RATE FREQUENCY	80 Hz
DEGREE OF PROTECTION	IP 67
HOUSING MATERIAL	BRASS, CHROME PLATED
ACTIVE FACE	PLASTIC, PA12–GF30

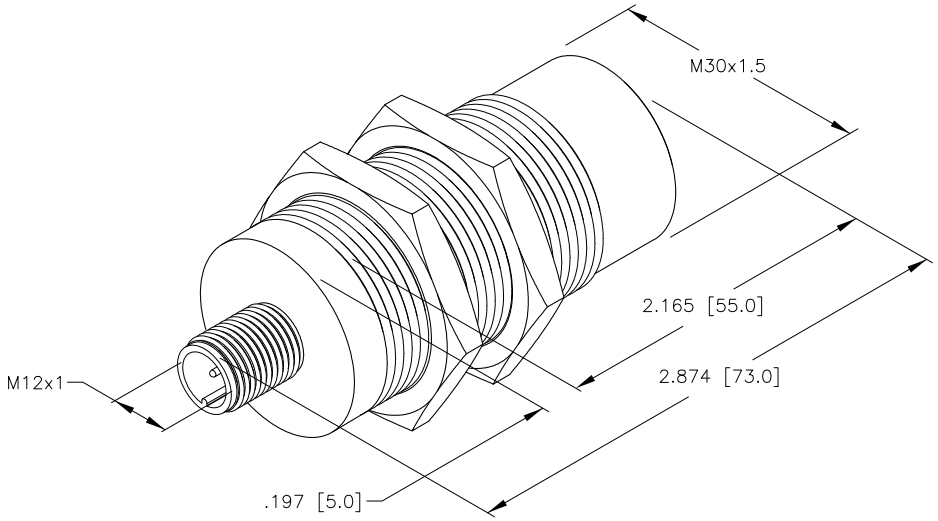

TYPICAL RESPONSE CURVE

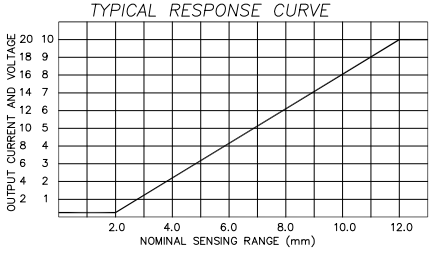

SOURCE DRAWING - FOR REFERENCE ONLY

REV	DESCRIPTION	BY	DATE	ECO NO.
A	DRAWING RELEASE	RDS	11/02/05	

RELATED DOCUMENTS
1.
2.
3.
4.

3RD ANGLE PROJECTION

THIS DRAWING IS PROPERTY OF TURCK INC. USE OF THIS DOCUMENT WITHOUT WRITTEN PERMISSION IS PROHIBITED.

TURCK INC
High Technology Sensors and Automation Controls
3000 CAMPUS DRIVE
MINNEAPOLIS, MN 55441
1–800–544–7769
(763) 553–7300
(763) 553–0708 fax
turck.com

MATERIAL

FINISH

ALL DIMENSIONS DISPLAYED ON THIS DRAWING ARE FOR REFERENCE ONLY

CONTACT TURCK FOR MORE INFORMATION

DRFT RDS | DATE 11/02/05
DSGN EH | SCALE NONE

UNIT OF MEASUREMENT
INCH [MILLIMETER]
DO NOT SCALE THIS DRAWING

DESCRIPTION
NI15–M30E–LIU–H1141

IDENTIFICATION NO. M1535564 | REV A

FILE: M1535564 | SHEET 1 OF 1