SCHAEFFLER



FAG

UK211

Radial insert ball bearing

Schaeffler ID:
0705491170000

Radial insert ball bearings UK, spherical outer ring, location by adapter sleeve, RSR seals on both sides

Technical information

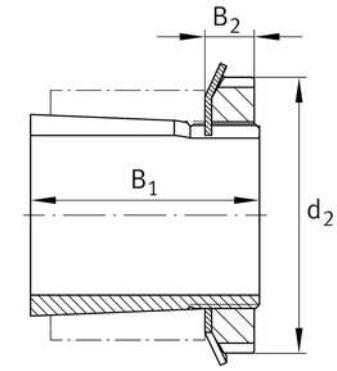

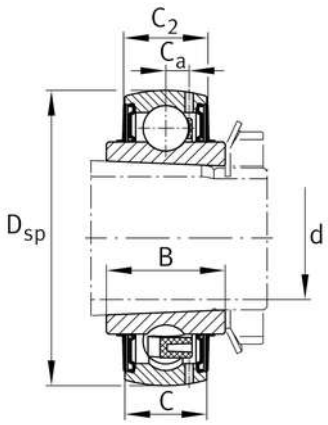

Main Dimensions & Performance Data

d	50 mm	Bore diameter
D_{SP}	100 mm	Outside diameter
B	36 mm	Width
B_1	59 mm	Locking collar total width
C_r	46.000 N	Basic dynamic load rating, radial
C_{0r}	29.000 N	Basic static load rating, radial
C_{ur}	1.520 N	Fatigue load limit, radial
	1,24 kg	Weight

Dimensions

C	25 mm	Width, outer ring
C_2	25,6 mm	Sealing total width
C_a	7 mm	Distance to lubrication hole
d_3	75 mm	Outside diameter locking collar/locknut
B_2	12 mm	Width nut and lock

Temperature range

T_{min}	-20 °C	Operating temperature min.
T_{max}	100 °C	Operating temperature max.

Calculation factors

f_0	14,2	Calculation factor

Additional information

	H2311-J30QH	Adapter sleeve
	KM11	Locknut
	MB11	Fuse
	H.H2311	Sleeve

The datasheet is only an overview of dimensions and basic load ratings of the selected product. Please always observe all further information and guidelines for this product. For further information you can use the contact form on our website.