



Dimensions

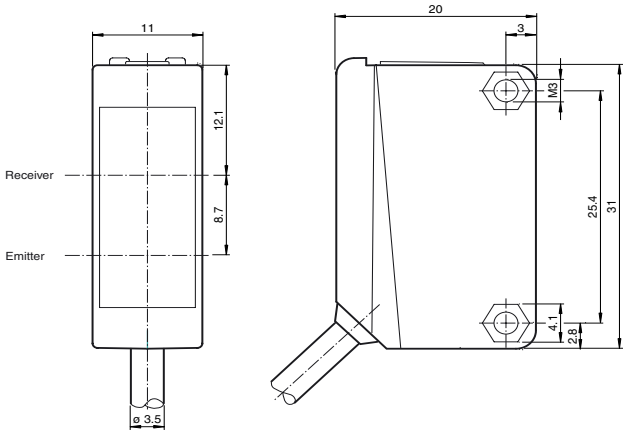

Model Number

ML100-55/103/115

Retro-reflective sensor with polarization filter

with 2 m fixed cable

Features

- Miniature design
- Easy to use
- Clearly visible LEDs for Power ON, switching state and stability control
- Full metal thread mounting
- Very bright, well visible light spot
- Not sensitive to ambient light

Description

The ML100 series is characterized by its miniature housing with integral, all-metal threaded bushings. All versions are equipped with a visible red transmitter LED. This greatly simplifies installation and commissioning. The switching states are easily visible from all directions thanks to the highly visible LEDs.

Accessories

OMH-10
Mounting aid

Suitable reflectors and cable sockets can be found in the Internet

Electrical connection

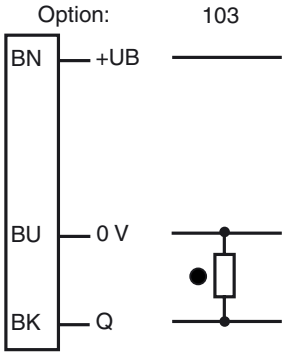

○ = Light on
● = Dark on

Indicators/operating means

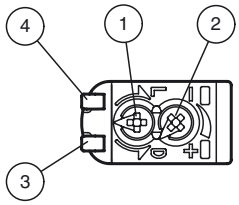

1	Light-Dark-switching	
2	Sensitivity adjuster	
3	Signal display	yellow
4	Operating display	green

Release date: 2010-04-16 12:55 Date of issue: 2010-04-16 210545_ENG.xml

Technical data

General specifications		
Effective detection range		0 ... 5 m
Reflector distance		0.01 ... 5 m
Threshold detection range		7 m
Reference target		H50 reflector
Light source		LED
Light type		modulated visible red light
Approvals		CE, cULus Listed 57M3 (Only in association with UL Class 2 power supply; Type 1 enclosure)
Diameter of the light spot		approx. 500 mm at a distance of 7 m
Angle of divergence		approx. 4 °
Optical face		frontal
Ambient light limit		EN 60947-5-2
Functional safety related parameters		
$MTTF_d$		860 a
Mission Time (T_M)		20 a
Diagnostic Coverage (DC)		0 %
Indicators/operating means		
Operating display		LED green: power on
Function display		LED yellow: lights up when receiving the light beam ; flashes when falling short of the stability control; OFF when light beam is interrupted
Controls		sensitivity adjustment
Controls		Light/dark switch
Electrical specifications		
Operating voltage	U_B	10 ... 30 V DC , class 2
Ripple		max. 10 %
No-load supply current	I_0	< 20 mA
Output		
Switching type		light/dark on, switchable
Signal output		1 PNP output, short-circuit proof, protected from reverse polarity, open collector
Switching voltage		max. 30 V DC
Switching current		max. 100 mA , resistive load
Voltage drop	U_d	≤ 1.5 V DC
Switching frequency	f	1000 Hz
Response time		0.5 ms
Ambient conditions		
Ambient temperature		-30 ... 60 °C (-22 ... 140 °F)
Storage temperature		-40 ... 70 °C (-40 ... 158 °F)
Mechanical specifications		
Protection degree		IP67
Connection		2 m fixed cable
Material		
Housing		PC (Polycarbonate)
Optical face		PMMA
Mass		approx. 50 g
Compliance with standards and directives		
Directive conformity		
EMC Directive 2004/108/EC		EN 60947-5-2
Standard conformity		
Standards		UL 508
Approvals and certificates		
UL approval		cULus Listed, Class 2 Power Source, Type 1 enclosure

Release date: 2010-04-16 12:55 Date of issue: 2010-04-16 210545_ENG.xml

Subject to modifications without notice
Copyright Pepperl+Fuchs

Pepperl+Fuchs Group www.pepperl-fuchs.com
USA: +1 330 486 0001 fa-info@us.pepperl-fuchs.com
Germany: +49 621 776-4411 fa-info@pepperl-fuchs.com
Singapore: +65 6779 9091 fa-info@sg.pepperl-fuchs.com

PEPPERL+FUCHS
SENSING YOUR NEEDS

Curves / Diagrams

Characteristic response curve

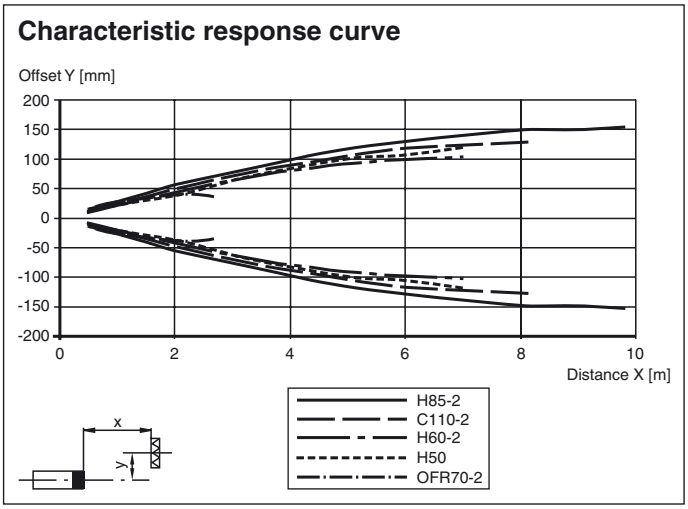

Relative received light strength

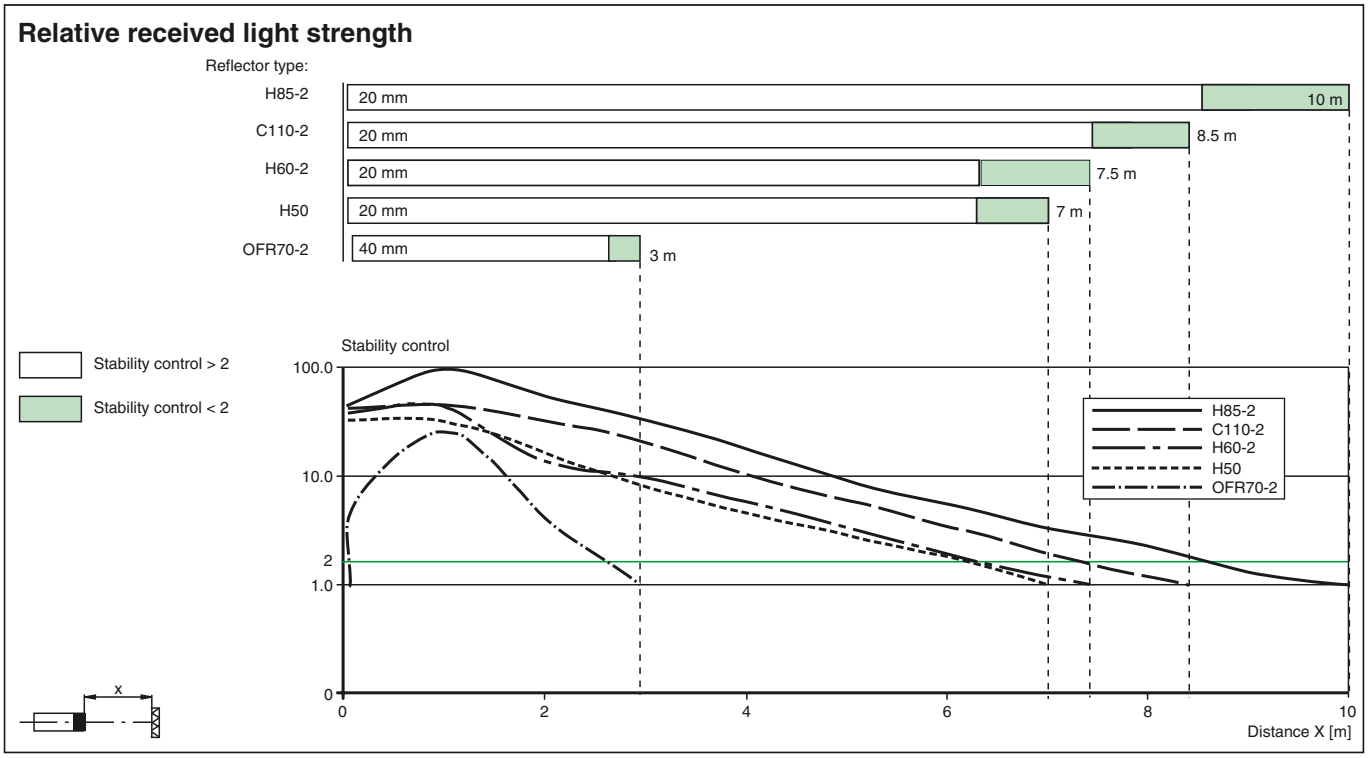

Release date: 2010-04-16 12:55 Date of issue: 2010-04-16 210545_ENG.xml