Clifford & Snell®

INSTALLATION & TECHNICAL INFORMATION

PLEASE READ PRIOR TO INSTALLATION



Clifford and Snell Intrinsically Safe YO3 Sounder Range

AUDIBLE SIGNALLING DEVICES

APPROVALS AND CONFORMITIES

252151, Issue 2, 23/06/2023

Website: www.moflash.com Email: technical@moflash.co.uk

1.0 Introduction

The Clifford & Snell Intrinsically Safe Sounder range of products YO3IS (Yodalarm) are ATEX certified. This range is approved to be installed in Group II (above ground) applications in Zones 0, 1, & 2 with gas groups IIA, IIB, IIC, and Zones 20, 21 & 22 for dust groups IIIC. The unit is available in 2 temperature classifications of either T4 or T6. The Sounder range has a total of 32 alarm tones selectable via a DIP switch which is set upon installation.

2.0 Intrinsically Safe Labelling

The product will have an individual serial number printed onto the product label, which is attached to the side of the sounder unit. An example T6 label is shown below.



These products have been tested by notified body **Element Materials Technology**, who are UKAS accredited to BS EN ISO/IEC 17025:2005 and ISO/IEC 17065:2012. It is also a Notified Body for the ATEX Directive, UKEX/UKCA, an IECEx Certification Body and an IECEx Testing Laboratory.

The suffix X at the end of the certificate numbers indicate that there are special clauses added for safe use of these units.

3.0 Types of Approval and Standards Applied

The C&S YO3IS product has been approved to and/or conforms to the following standards:
IEC 60079-0:2017
EN IEC 60079-0:2018
IEC 60079-11:2011
EN 60079-11:2012

4.0 Zones, Groups and Temperature Classifications

The Clifford & Snell YO3IS is certified to the following 2 variations:

YO3/ISC/T4	YO3/ISC/T6
⟨Ex⟩ II 1 G Ex ia IIC T4 Ga,	⟨Ex⟩ II 1 G Ex ia IIC T6 Ga,
⟨Ex⟩ II 1 D Ex ia IIIC T_{200} 110°C Da.	⟨Ex⟩ II 1 D Ex ia IIIC T_{200} 75°C Da.

This means that the units can be installed in locations with the following conditions when connected to an approved system:

Zones

Zone 0	Explosive gas air mixture continuously present.
Zone 1	Explosive gas air mixture likely to occur in normal operation.
Zone 2	Explosive gas air mixture not likely to occur, and if it does, it will only exist for a short time.
Zone 20	Explosive dust air mixture is continuously present.
Zone 21	Explosive dust air mixture likely to occur in normal operation.
Zone 22	Explosive dust air mixture not likely to occur, and if it does, it will only exist for a short time.

Gas Groupings
IIA Propane Group, IIB Ethylene Group and IIC Hydrogen and Acetylene

Dust
IIIA Fibres and Flying, IIIB Flour and Grain, IIIC Coal Dust and Metal Dust.

Ambient Conditions

Operating Temperature Range:	-25°C < Ta <40°C
Storage Temperature Range:	-40°C < Ta <70°C
Max. Relative Humidity:	95% @ 40°C

The maximum surface temperature of an operating product will not exceed 110°C for a T4 variant, or 75°C for a T6 variant.

A Declaration of Conformity and the ATEX Certificates are available upon request or alternately visit www.moflash.co.uk.

5.0 Installation

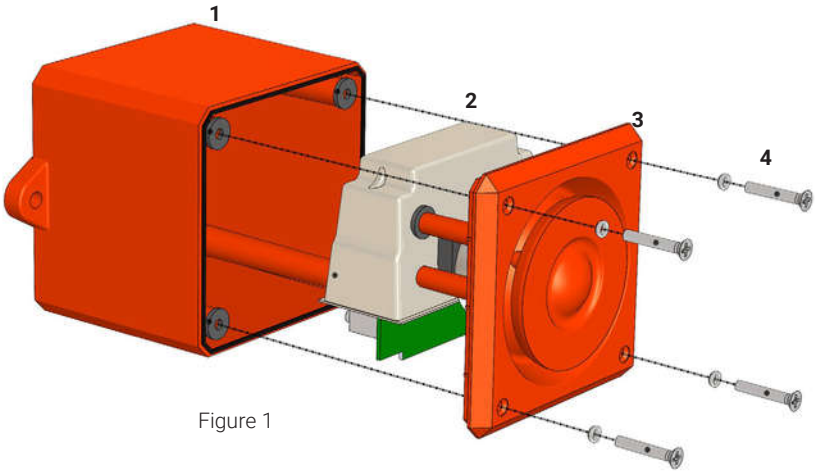

Figure 1

Key Components

1. Back Box
2. Sounder PCB
3. Sounder Front Cover
4. Retaining Screws

General Requirement

The Sounder must be installed in accordance with the latest EN60079-0 or equivalent IEC specification. A suitably rated Galvanic Isolator or Zener Barrier must also be used, with consideration for any local installation requirements. Installation should only be carried out by appropriately competent and qualified personnel.

- The location of the Sounder should be chosen with due regard to the area over which the signalling device must be audible.
- These units are suitable for wall or ceiling mounting.
- Environmental exposure conditions during installation should be dry. Moist or wet conditions should be avoided.
- Avoid mounting the product where it may be subjected to excessive vibration.

Mounting

Devices should be mounted using the two lugs projecting from the case. The lugs are bored 6mm on 102mm centres. The minimum length of fixing screw required is 20mm. To maintain the IP rating of the enclosure, any cable entries must be fitted with a suitably rated cable gland (not included). Max cable termination 2.5mm ². Dimensional drawing can be seen on page 5.

DIMENSIONAL DRAWING

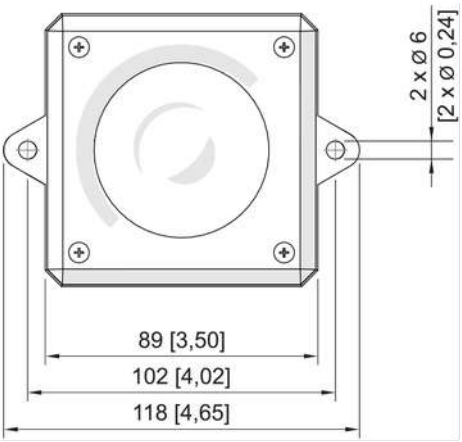

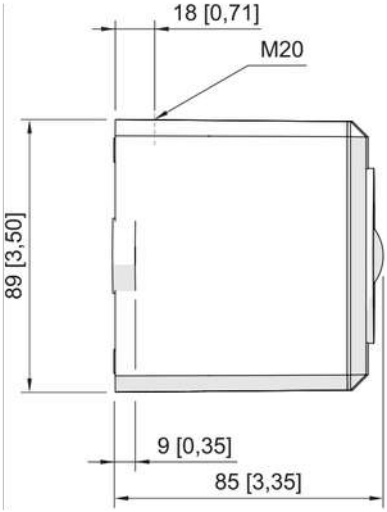

Figure 2

6.0 Wiring

Single Stage Alarm

- Connect the leads according to the circuit diagram (Figure 3)
- Supply the active device with power.

Independent wiring

A single channel safety barrier or single intrinsically safe connection is required.

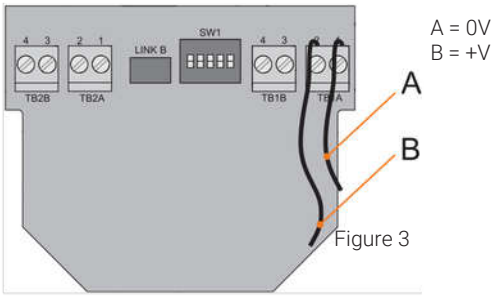

Figure 3

WARNING:

Explosion hazard due to selecting the wrong cables! Non-compliance could result in severe or fatal injuries.

If using separate safety barriers for first and second stage options, observe the cable specifications stated on the selected Zener barrier or the isolator certificate.

Two Stage Alarm
The C&S YO3IS has options for first and second sounder stages.

Stage 1 tones
Selected by using the DIP switch on the Sounder PCB (Figure 7). Tone descriptions can be found in the Tone Table on Page 12.

Stage 2 tones
Each first stage tone has a pre-programmed second stage which is listed in the Tone Table. Users are able to switch between the first and second stage tones by wiring the unit in one of 2 ways.

Second Stage Activation
3rd wire option

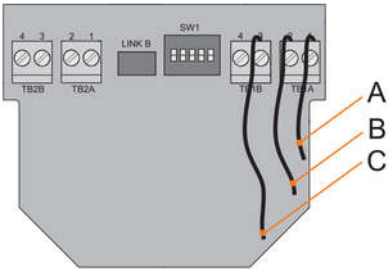

Figure 4

Stage 1: A: 0v
B: +V

Stage 2: A: 0V
B: +V
C: +V

A dual channel barrier or double intrinsically safe connection is required.

Supply “B” with power to activate the first sound tone frequency.
Supply “B”and “C” with power according to the circuit diagram for the second tone frequency.
A dual-channel barrier or double intrinsically safe connection is required.

2 wire option (reverse polarity)

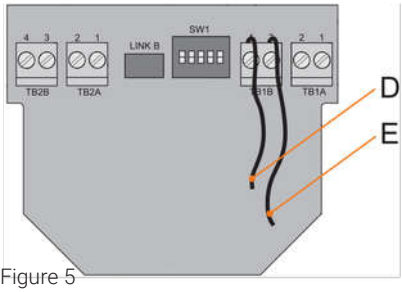

Figure 5

Stage 1: D: 0V
E: +V

Stage 2: D: +V
E: 0V

Connect the leads according to Figure 5. Apply power as shown above for required stage.

Supply with power to activate the first sound tone frequency.

Reverse the polarity to activate the second sound tone frequency.

Line Monitoring

If Line Monitoring is required, this can be achieved by using an end-of-line resistor. For this purpose, a wire-wound or metal film resistor with a resistance value of at least 750 Ohm and rated power of at least 2W or a 4700 Ohm and a rated power of at least 0.4W.

The line monitoring facility allows the integrity of the line to the sounder to be monitored through the barrier. Two sounders of the same type can be connected in parallel. The resistor can be fitted as per the diagram below (Figure 6).

Line monitoring is optional, and it is the responsibility of the system designer to decide if it is required.

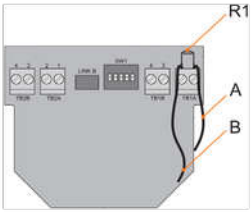

R1 - End-of-line resistor (value to be defined by system designer).
A: 0v
B: +ve

Figure 6

Tone Selection & Volume Control

The C&S YO3IS unit has a total of 32 alarm tones that can be selected upon installation. This is done via the DIP switch shown below. The Tone Table is shown on page 12 of this document.

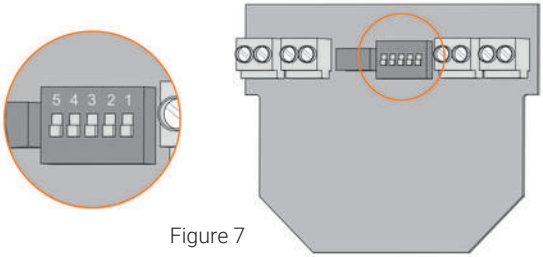

Figure 7

Arrange the settings of the DIP switch using a suitable tool.

- DIP switch “up” corresponds to “1”
- DIP switch “down” corresponds to “0”

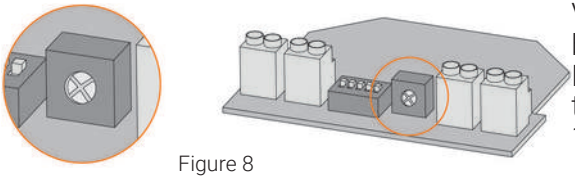

Figure 8

Volume of the product can be reduced by adjusting the POT on the sounder PCB anti-clockwise. (Max. reduction 15dB).

Barrier/Isolator Information
Connection into the unit must be via a suitably rated Zener Barrier or Galvanic Isolator.

<u>If these units are powered directly without a Barrier/Isolator, the PCBs will be permanently damaged and warranty will be void.</u>

Example of single channel barrier connection

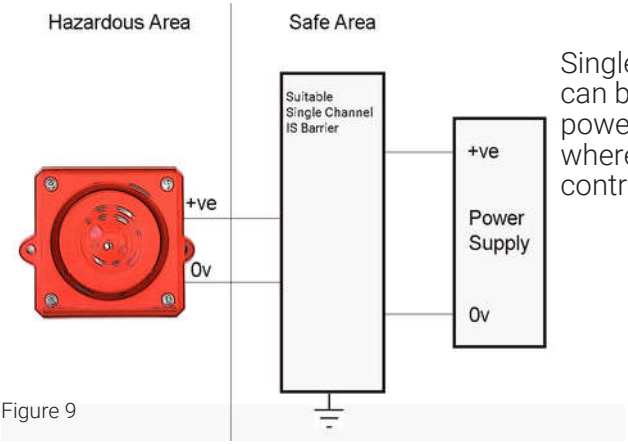

Figure 9

Single barrier connections can be used for simple power supply installations, where limited functionality/ control is required.

Example of dual channel barrier connection

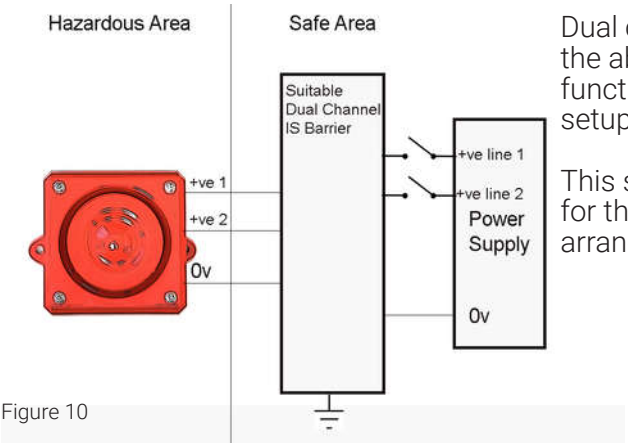

Figure 10

Dual channel barriers offer the ability of more control functionality with a simple setup.

This setup would be suitable for the second stage arrangement.

Galvanic Isolators

The Galvanic Isolators have the advantage of not requiring an isolated high integrity earth to be installed, which is required for Zener Barriers. These Isolators are often more expensive per unit but may reduce installation costs as the earth is not required.

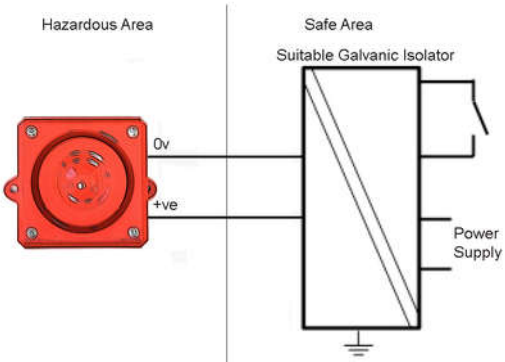

Figure 11

Single isolator connections can be used for simple power supply installations, where limited functionality/ control is required.

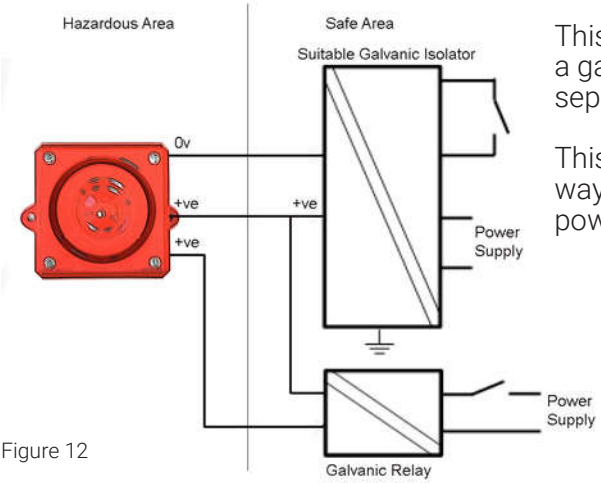

Figure 12

This is an example of using a galvanic isolator with a separate galvanic relay.

This is another acceptable way for the product to be powered.

As with the Zener barriers, the first and second stages can be triggered using Galvanic Isolators, however an additional Intrinsically Safe relay is required to make the additional connection.

As with all equipment in the system, the correct ratings must be maintained to keep the integrity and safety to the correct levels. The relay can be switched to change between stage 1 and stage 2.

7.0 Maintenance

Little or no maintenance is required during the normal working life of the product. The C&S YO3 Intrinsically Safe enclosures are resistant to most acids, alkalis and chemicals and have been designed to withstand severe weather conditions. However it is suggested that continuous supervision and periodic inspections may be required in relation to the requirements of the installation as per IEC 60079-17.

To avoid the possibility of a potential electrostatic charge build up, it is recommended that the exterior of the product is periodically wiped down with a clean damp cloth. At this point, a visual inspection is recommended to ensure that the product is in good working order and no damage has been sustained during its normal operation.

The enclosure is non-conducting and may generate an ignition-capable level of electrostatic charge under certain extreme conditions. It is the responsibility of the user to ensure that the equipment is installed in a location where it will not be subjected to external conditions that might cause a build-up of electrostatic charge on the surface of the unit.

8.0 Conditions for Use

The C&S Intrinsically Safe Signalling Range uses an enclosure rated at IP66 with suitably rated cable gland fitted (not supplied). To ensure that this rating is maintained once installed, a suitable cable gland must be used which matches this level of protection. The base of the unit contains one M20 aperture for cabling purposes.

Specific Conditions of Use:

1. Clean equipment regularly to prevent dust build-up with a damp or anti-static cloth only.
2. Equipment only suitable for fixed installation.
3. It must be ensured that the equipment is installed in accordance with IEC 60079-14 and IEC 60079-25 and that capacitance and inductance limits are not exceeded by distributed capacitance (Cc) or distributed inductance (Ic) due to cable length.

9.0 Technical Data

- Operating voltage: 16.2 - 26.4vDC
- Current Consumption:

Supply	Certified Barrier / Isolator Parameters	Current Consumption (Tone 1)	Sound Output (dB(A) @ 1m)
24vDC	28v/300Ω	24mA	100
18vDC	28v/300Ω	33mA	97

- Entity Parameters:

	Sounder
U_i	28v
I_i	93mA
P_i	0.66W
C_i	0
L_i	0

- Line Monitoring: Yes

Acoustic Data

- Volume: Max. 100dB(A) @ 1m
- Volume Control: 15 dB(A) adjustment (T4 Models only)
- Sound Stages: 2
- Sound Selection: via DIP Switch

Mechanical Data

- Cable Entries: 1x M20

Material

- Enclosure: ABS UL94 5VB, Flame Retardant
- Assembly Parts: Stainless Steel
- IP Rating: Up to IP66 to IEC 60529 (with suitably rated cable gland, not supplied)

9.0 Tone Table

First Stage Tone	Tone Description	Frequency (Hz)	Repetition Rate	Second Stage Tone	Tone Selection DIP Switch					dB(A) @ 1m (±3dB)	Current Draw (mA)
					1	2	3	4	5		
1	Alternating	800-1000	0.5	3	I	I	I	I	I	92	26
2	Alternating	2500-3100	0.5	4	O	I	I	I	I	94	39
3	Alternating (fast)	800-1000	0.25	7	I	O	I	I	I	92	26
4	Alternating (fast)	2500-3100	0.25	8	O	O	I	I	I	93	39
5	Alternating	440-554	0.4/0.1	14	I	I	O	I	I	91	24
6	Alternating	430-470	1.0	14	O	I	O	I	I	90	24
7	Alternating (v.fast)	800-1000	0.13	12	I	O	O	I	I	92	26
8	Alternating (v.fast)	2500-3200	0.07	13	O	O	O	I	I	93	39
9	Alternating	440-554	2.0	10	I	I	I	O	I	92	24
10	Continuous Tone	700	–	1	O	I	I	O	I	90	25
11	Continuous Tone	1000	–	31	I	O	I	O	I	90	26
12	Continuous Tone	1000	–	7	O	O	I	O	I	90	26
13	Continuous Tone	2300	–	2	I	I	O	O	I	98	36
14	Continuous Tone	440	–	9	O	I	O	O	I	90	24
15	Interrupted Tone	1000	2.0	31	I	O	O	O	I	92	25
16	Interrupted Tone	420	1.25	30	O	O	O	O	I	86	22
17	Interrupted Tone	1000	0.5	1	I	I	I	I	O	91	25
18	Interrupted Tone	2500	0.25	4	O	I	I	I	O	92	39
19	Interrupted Tone	2500	0.5	2	I	O	I	I	O	93	39
20	Interrupted Tone	700	6/12	10	O	O	I	I	O	90	25
21	Interrupted Tone	1000	1.0	32	I	I	O	I	O	90	25
22	Interrupted Tone	700	4.0	10	O	I	O	I	O	89	24
23	Interrupted Tone	700	0.25	10	I	O	O	I	O	88	24
24	Interrupted Tone	720	0.7/0.3	10	O	O	O	I	O	89	24
25	Int, fast, rising volume	1400	0.25	26	I	I	I	O	O	89	23
26	Fast siren	250-1200	0.085	11	O	I	I	O	O	91	25
27	Rising constant fall	1000	10/40/10	17	I	O	I	O	O	92	25
28	ISO 8201 Evacuation	800-1000	As	11	O	O	I	O	O	91	25
29	Fast Whoop	500-1000	0.15	32	I	I	O	O	O	91	25
30	Slow Whoop	500-1200	4.5	12	O	I	O	O	O	93	27
31	Reverse sweep	1200-500	1.0	11	I	O	O	O	O	91	25
32	Siren	500-1200	3.0	26	O	O	O	O	O	93	26

Moflash Signalling Limited accepts no liability for any consequences following use of this document. Any technical specifications and products referred to within this document are subject to change without notice due to continual improvement and product development policies any changes will be with consent of relevant notified body. All dB(A) figures are subject to environmental conditions. The units are sold under Moflash standard conditions of sale, available on request.