RoHS Compliant

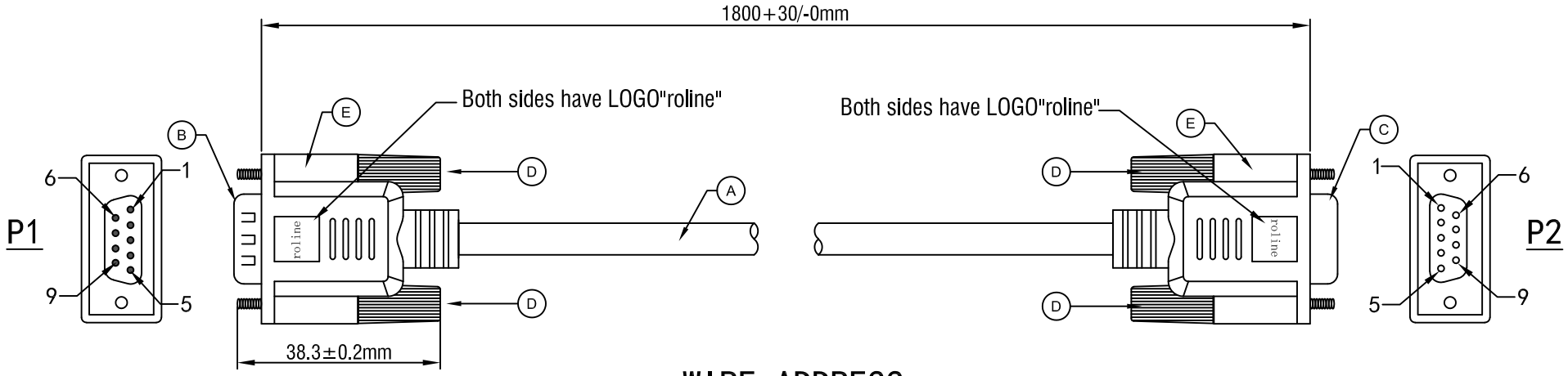

WIRE ADDRESS

P1		P2
1	———	1
2	———	2
3	———	3
4	———	4
5	———	5
6	———	6
7	———	7
8	———	8
9	———	9
Shell	———	Shell

Electrical Test:
1.100% TEST OPEN SHORT MIS-WIRE.
2.CONTACT RESISTANCE:3Ω MAX.
3.INSULATION RESISTANCE:5MΩ MIN.
4.HI-POT:300V DC/10MS.

NUMBER	BOM.NO	PRODUCT SPECIFICATIONS	Quantity	Unit
E		45P PVC BEIGE		G
D		Screw:#4-40UNC 2.3*38.3mm(BEIGE MOLD NICKEL PLATED)	4	PCS
C		DB 9P FEMALE(Black Insulator, Nickel Plated,PIN Gold Plated 1U")	1	PCS
B		DB 9P MALE(Black Insulator, Nickel Plated,PIN Gold Plated 1U")	1	PCS
A		NON-UL 30AWG*9C(BC)+AL-foil+Drain ,OD=5.0mm BEIGE PVC JACKET.	1	PCS

ROLINE RS232 Cable, DB9 M - F, 1.8 m

Item	11.01.6218	
Draw	Sam	Date: 2014.12.03
Approval		
Duty	F16	BOM.NO: 10123
Sample NO.		

SECOMP

Drawings of 1 (2) | Proportion: 1:1 | Unit(mm) | A4