TI00434P/00/EN/22.21
71542199
2021-09-30

Technical Information
Deltabar M PMD55

Differential pressure measurement





Differential pressure transmitter with metal sensor

Application

The device is used for the following measuring tasks:
- Flow measurement (volume or mass flow) in conjunction with primary elements in gases, vapours and liquids
- Level, volume or mass measurement in liquids
- Differential pressure monitoring, e.g. of filters and pumps

Your benefits

- Very good reproducibility and long-term stability
- High reference accuracy: 0.10 %
  as PLATINUM version: up to 0.075 %
- Turn down up to 100:1
- Compact transmitter design
- Fast commissioning via DIP switches
- Uniform platform for differential pressure, hydrostatics and pressure (Deltabar M – Deltapilot M – Cerabar M)
- Simple, fast commissioning through a user interface designed for real-world applications
- Used for process pressure monitoring up to SIL 2, certified to IEC 61508 Edition 2.0 and IEC 61511 by TÜV NORD

Endress+Hauser
People for Process Automation

Table of contents

Document information 4
Document function 4
Symbols used 4
Documentation 5
Terms and abbreviations 5
Turn down calculation 6

Function and system design 7
Measuring principle 7
Level measurement (level, volume and mass) 7
Flow measurement 7
Communication protocol 9

Input 10
Measured variable 10
Measuring range 10

Output 11
Output signal 11
Signal range 4 to 20 mA 11
Signal on alarm 11
Load - 4...20 mA HART 11
Damping 11
Firmware version 12
HART protocol-specific data 12
Wireless HART data 12
Protocol-specific data PROFIBUS PA 12
FOUNDATION Fieldbus protocol-specific data 13

Power supply 15
Terminal assignment 15
Supply voltage 15
Current consumption 16
Electrical connection 16
Terminals 16
Cable entry 16
Connector 17
Cable specification 18
Start-up current 18
Residual ripple 18
Influence of power supply 18
Overvoltage protection (optional) 18

Performance characteristics 20
Response time 20
Reference operating conditions 20
Total performance 20
Resolution 22
Total error 22
Long-term stability 22
Response time T63 and T90 23
Installation factors 25

Mounting 26
General installation instructions 26
Measuring arrangement 26
Wall and pipe-mounting 27
Wall and pipe-mounting manifold (optional) 27
Typical installation arrangements 28
Oxygen applications 29
PWIS cleaning 29
Ultrapure gas applications 29

Environment 30
Ambient temperature range 30
Ambient temperature range 30
Storage temperature range 30
Climate class 30
Degree of protection 30
Vibration resistance 30
Electromagnetic compatibility 30

Process 31
Process temperature limits (temperature at transmitter) . . 31
Process temperature range, Seals 31
Pressure specifications 31

Mechanical construction 32
Housing 32
Process connection 32
Dimensions V1 option; Impulse pipe vertical; alignment 90 33
Dimensions H1 option; Impulse pipe horizontal; alignment 180° 34
Dimensions H2 option; Impulse pipe horizontal; alignment 90° 35
DA63M- valve manifold (optional) 36
Materials not in contact with process 37
Materials in contact with process 38
Oval flange adapters 38
Vent valves 38

Operability 39
Operating concept 39
Local operation 39
Operating languages 41
Remote operation 42
System integration 43

Certificates and approvals 44
CE mark 44
RoHS 44
RCM marking 44
Ex approvals 44
EAC conformity 44
Suitable for hygiene applications 44
Certificate of current Good Manufacturing Practices (cGMP) 44
Functional safety SIL 44
Other standards and guidelines 44
AD2000 45
Pressure Equipment Directive 2014/68/EU (PED) 45
Manufacturer declaration 45
Drinking water approval 45

Classification of process sealing between electrical systems and (flammable or combustible) process fluids in accordance with ANSI/ ISA 12.27.01 45
Inspection certificate 45
Calibration; unit 46
Calibration 46
Service 46

Ordering information 47
Special device versions 47
Scope of delivery 47
Measuring point (TAG) 47
Configuration datasheet 47

Supplementary documentation 51
Standard documentation 51
Supplementary device-dependent documentation 51
Field of Activities 51
Safety instructions 51
Special Documentation 51

Accessories 52
Manifolds 52
Additional mechanical accessories 52
Mounting bracket for wall and pipe mounting 52
M12 connector 52
Service-specific accessories 52

Registered trademarks 52

Document information

Document function

The document contains all the technical data on the device and provides an overview of the accessories and other products that can be ordered for the device.

Symbols used

Safety symbols

Symbol	Meaning
DANGER	**DANGER!** This symbol alerts you to a dangerous situation. Failure to avoid this situation will result in seriousor fatal injury.
WARNING	**WARNING!** This symbol alerts you to a dangerous situation. Failure to avoid this situation can result in seriousor fatal injury.
CAUTION	**CAUTION!** This symbol alerts you to a dangerous situation. Failure to avoid this situation can result in minoror medium injury.
NOTICE	**NOTICE!** This symbol contains information on procedures and other facts which do not result in personalinjury.

Electrical symbols

Symbol	Meaning	Symbol	Meaning
	**Protective ground connection** A terminal which must be connected to ground prior to establishing any other connections.		**Ground connection** A grounded terminal which, as far as the operator is concerned, is grounded via a grounding system.

Symbols for certain types of information

Symbol	Meaning
	**Permitted** Procedures, processes or actions that are permitted.
	**Preferred** Procedures, processes or actions that are preferred.
	**Forbidden** Procedures, processes or actions that are forbidden.
	**Tip** Indicates additional information.
	Reference to documentation
	Reference to page
	Reference to graphic
	Visual inspection

Symbols in graphics

Symbol	Meaning
1, 2, 3 ...	Item numbers
1. , 2. , 3. ...	Series of steps

Symbol	Meaning
A, B, C, ...	Views
A-A, B-B, C-C, ...	Sections

Documentation

See chapter "Additional documentation" → 51

The document types listed are available:
In the Download Area of the Endress+Hauser Internet site: www.endress.com → Download

Terms and abbreviations

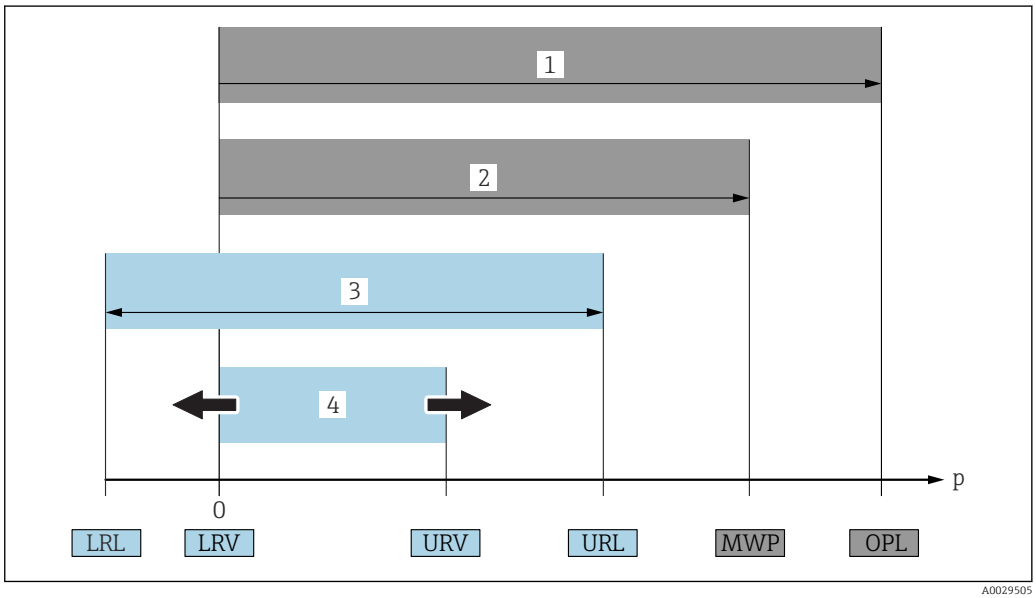

Item	Term/abbreviation	Explanation
1	OPL	OPL: The OPL (over pressure limit = sensor overload limit) for the measuring device depends on the lowest-rated element, with regard to pressure, of the selected components, i.e. the process connection has to be taken into consideration in addition to the measuring cell. Observe pressure-temperature dependency.
2	MWP	MWP: The MWP (maximum working pressure) for the sensors depends on the lowest-rated element, with regard to pressure, of the selected components, i.e. the process connection has to be taken into consideration in addition to the measuring cell. Observe pressure-temperature dependency. The MWP may be applied at the device for an unlimited period of time. The MWP can be found on the nameplate.
3	Maximum sensor measuring range	Span between LRL and URL This sensor measuring range is equivalent to the maximum calibratable/adjustable span.
4	Calibrated/adjusted span	Span between LRV and URV Factory setting: 0 to URL Other calibrated spans can be ordered as customized spans.
p	-	Pressure
-	LRL	Lower range limit
-	URL	Upper range limit
-	LRV	Lower range value
-	URV	Upper range value
-	TD (turn down)	Turn down Example - see the following section.

Turn down calculation

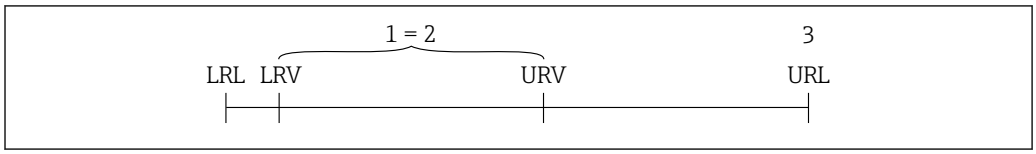

1 Calibrated/adjusted span
2 Zero point-based span
3 Upper range limit

Example

- Sensor: 10 bar (150 psi)
- Upper range limit (URL) = 10 bar (150 psi)
- Calibrated/adjusted span: 0 to 5 bar (0 to 75 psi)
- Lower range value (LRV) = 0 bar (0 psi)
- Upper range value (URV) = 5 bar (75 psi)

Turn down (TD):

$$TD = \frac{URL}{|URV - LRV|}$$

$$TD = \frac{10 \text{ bar (150 psi)}}{|5 \text{ bar (75 psi)} - 0 \text{ bar (0 psi)}|} = 2$$

In this example, the TD is 2:1.
This span is based on the zero point.

Function and system design

Measuring principle

Metallic process isolating diaphragm

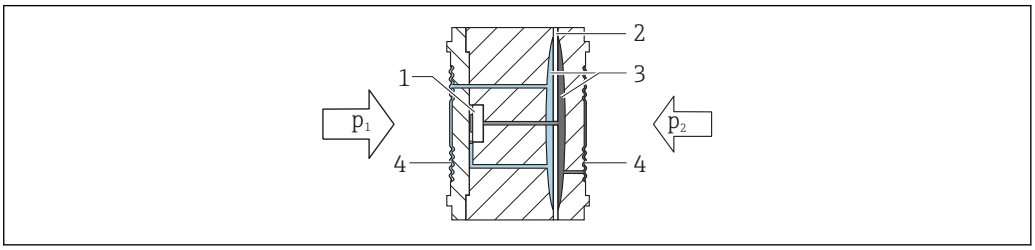

A0023919

1 Sensing element
2 Overload diaphragm/Middle diaphragm
3 Filling oil
4 Process isolating diaphragm

The metal separating diaphragms (4) are deflected on both sides by the acting pressures p1 and p2. A filling oil (3) transfers the pressure to a resistance circuit bridge (semiconductor technology). The differential- pressure-dependent change of the bridge output voltage is measured and further processed.

Level measurement (level, volume and mass)

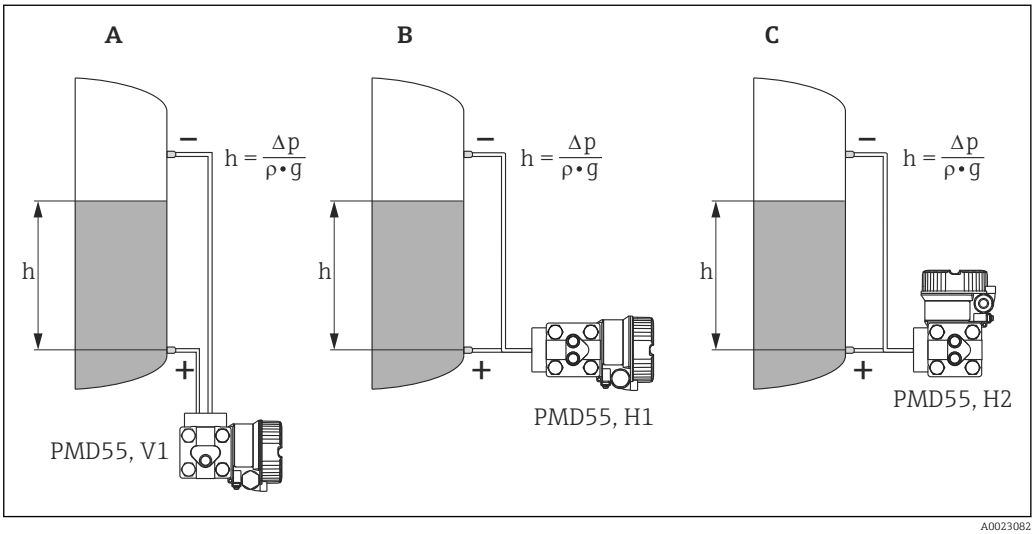

A0023082

A Option V1; vertical impulse line; 90° alignment
B Option H1; horizontal impulse line; 180° alignment
C Option H2; horizontal impulse line; 90° alignment
h Height (level)
Δp Differential pressure
ρ Density of the medium
g Gravitation constant

Your benefits

- Volume and mass measurements in any tank shapes by means of a freely programmable characteristic curve
- Choice of diverse level units
- Has a wide range of uses, even in the following cases:
  - for level measurement in tanks with superimposed pressure
  - in the event of foam formation
  - in tanks with agitators of screen fittings
  - in the event of liquid gases
  - for standard level measurement

Flow measurement

Flow measurement with Deltabar M PMD55 and primary element

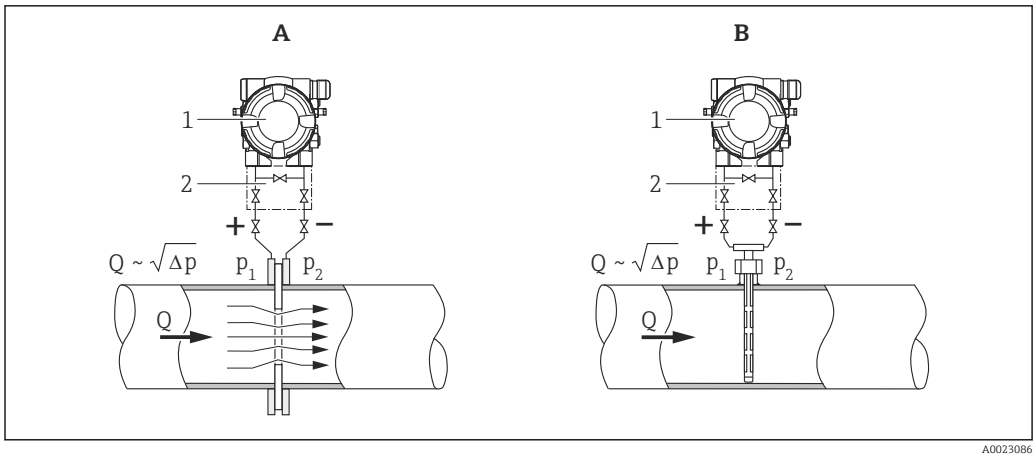

A Orifice plate
B Pitot tube
1 Deltabar M
2 3-valve manifold
Q Flow
Δp Differential pressure, $\Delta p = p_1 - p_2$

Your benefits

- Choice between five flow modes of operation:
  - Volume flow
  - Norm volume flow (European norm conditions)
  - Standard volume flow (American standard conditions)
  - Mass flow
  - %
- Choice of diverse flow units with automatic unit conversion.
- Low flow cut off: when activated, this function suppresses small flows which can lead to large fluctuations in the measured value.
- Contains two totalizers as standard. One totalizer can be reset to zero.
- The totalizing unit can be individually set for each totalizer. This allows independent daily and annual quantity totalizing.

Typical arrangements for flow measurements

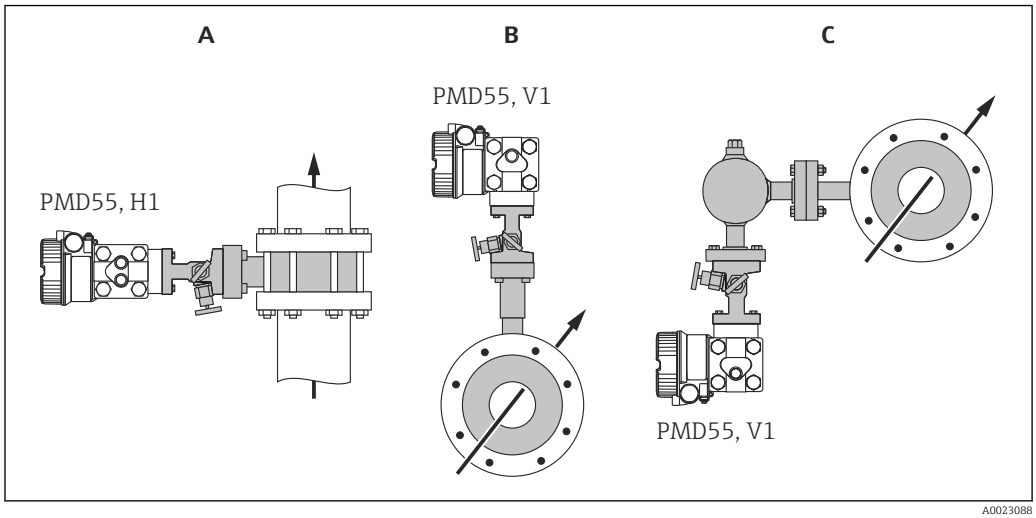

A Liquid in vertical pipe; H1 option; horizontal impulse line; 180° alignment
B Gas in horizontal pipe; V1 option; vertical impulse line; 90° alignment
C Vapour in horizontal pipe; V1 option; vertical impulse line; 90° alignment

Mounting example

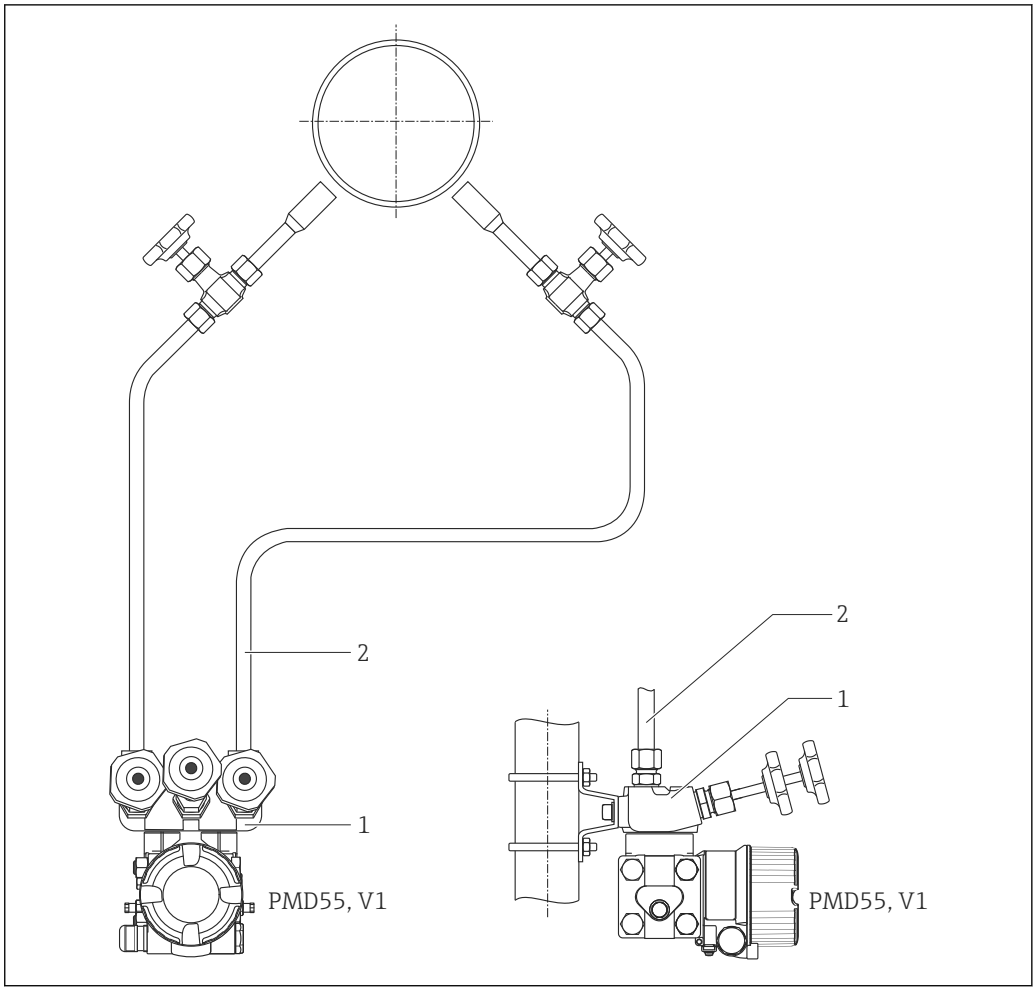

1 Valve manifold
2 Impulse line

Communication protocol

- 4 to 20 mA with HART communication protocol
- PROFIBUS PA
  - The Endress+Hauser devices meet the requirements of the FISCO model.
  - Due to a low current consumption of 11 mA ± 1 mA, the following number of devices can be operated on one bus segment if installing as per FISCO: up to 8 devices for Ex ia, CSA IS and FM IS applications or up to 31 devices for all other applications, e.g., in non-hazardous areas, Ex nA etc. Further information on PROFIBUS PA can be found in Operating Instructions BA00034S "PROFIBUS DP/PA: Guidelines for planning and commissioning" and in the PNO Guideline.
- FOUNDATION Fieldbus
  - The Endress+Hauser devices meet the requirements of the FISCO model.
  - Due to a low current consumption of 16 mA ± 1 mA, the following number of devices can be operated on one bus segment if installing as per FISCO: up to 6 devices for Ex ia, CSA IS and FM IS applications or up to 22 devices for all other applications, e.g., in non-hazardous areas, Ex nA etc. Further information on FOUNDATION Fieldbus, such as requirements for bus system components, can be found in Operating Instructions BA00013S "FOUNDATION Fieldbus Overview".

Input

Measured variable

Measured process variables

Differential pressure, from which flow (volume flow or mass flow) and level (level, volume or mass) are derived

Measuring range

Sensor	Maximum sensor measuring range		Smallest calibratable measuring span (preset at the factory) [1]	MWP	OPL		Min. operating pressure [2]	Option [3]
	lower (LRL)	upper (URL)			on one side	on both sides		
[mbar (psi)]	[mbar (psi)]	[mbar (psi)]	[mbar (psi)]	[bar (psi)]	[bar (psi)]	[bar (psi)]	[$mbar_{abs}$ (psi_{abs})]	
10 (0.15)	−10 (-0.15)	+10 (+0.15)	0.5 (0.0075)	1 (15) [4]	1 (15) [4]	1.5 (22.5) [4]	0.1 (0.0015) [4]	7B
30 (0.45)	−30 (-0.45)	+30 (+0.45)	1.5 (0.0225)					7C
100 (1.5)	−100 (-1.5)	+100 (+1.5)	5 (0.075)	70 (1050) [5] 160 (2400) [6]	70 (1050) [5] 160 (2400) [6]	105 (1575) [5] 240 (3600) [6]	0.1 (0.0015) [5] 0.1 (0.0015) [6]	7D
500 (7.5)	−500 (-7.5)	+500 (+7.5)	25 (0.375)					7F
1000 (15)	-1000 (− 15)	+1000 (+ 15)	50 (0.75)					7G
3000 (45)	−3000 (-45)	+3000 (+45)	150 (2.25)					7H
16000 (240)	−16000 (-240)	+16000 (+240)	800 (12)					7L
40000 (600)	−40000 (-600)	+40000 (+600)	2000 (30)					7M

1) Recommended Turn down: Max 100:1. Factory calibration Turn down: Max 20:1
2) The minimum operating pressure indicated in the table applies to silicone oil under reference operating conditions. Minimum operating pressure at 85°C (185°F) for silicone oil: 10 mbar (0.15 psi) (abs)
3) Product Configurator, "Sensor Nominal Value" ordering feature
4) Option "2" in the Order Code - Feature 60
5) Option "6" in the Order Code - Feature 60
6) Option "7" in the Order Code - Feature 60

Nominal Pressure PN	Option [1]
1 bar / 100 kPa/ 14.5 psi	2
70 bar / 7 MPa / 1015 psi	6
160 bar / 16 MPa / 2400 psi	7

1) Product Configurator "Nominal Pressure PN" ordering feature

Output

Output signal

- 4 to 20 mA with superimposed digital communication protocol HART 6.0, 2-wire
- Digital communication signal PROFIBUS PA (Profile 3.02)
- Digital communication signal FOUNDATION Fieldbus

Output	Optional [1]
4 to 20mA HART	2
PROFIBUS PA	3
FOUNDATION Fieldbus	4

1) Product Configurator, "Output" ordering feature

Signal range 4 to 20 mA

4 to 20 mA HART: 3.8 to 20.5 mA

Signal on alarm

As per NAMUR NE 43

- 4 to 20 mA HART:
  Options:
  - Max. alarm: can be set from 21 to 23 mA (factory setting: 22 mA)
  - Hold measured value: last measured value is held
  - Min. alarm: 3.6 mA
- PROFIBUS PA: can be set in the Analog Input block
  Options: Last Valid Out Value (factory setting), Fail-safe Value, Status Bad
- FOUNDATION Fieldbus: can be set in the Analog Input block
  Options: Last Good Value, Fail-safe Value (factory setting), Wrong Value

Load - 4...20 mA HART

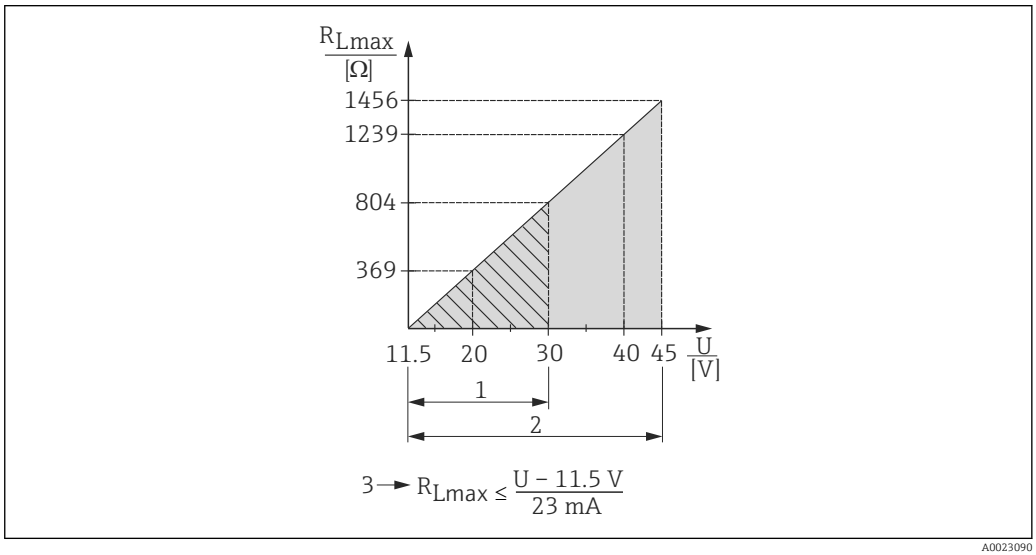

1 Supply voltage 11.5 to 30 V DC for intrinsically safe device versions (not for analog)
2 Supply voltage 11.5 to 45 V DC (versions with plug-in connector 35 V DC) for other types of protection and for uncertified device versions
3 R_{Lmax} Maximum load resistance
U Supply voltage

When operating via a handheld terminal or via a PC with an operating program, a minimum communication resistance of 250 Ω must be taken into account.

Damping

A damping affects all outputs (output signal, display):

- Via local display (not analog), handheld terminal or PC with operating program continuously from 0 to 999 s
- Via the DIP switch on the electronic insert,
  "on" (= set value) and "off" (= damping switched off)
- Factory setting: 2 s

Firmware version

Designation	Option [1]
01.00.zz, FF, DevRev01	76
01.00.zz, PROFIBUS PA, DevRev01	77
01.00.zz, HART, DevRev01	78

1) Product Configurator, "Firmware version" ordering feature

HART protocol-specific data

Manufacturer ID	17 (11 hex)
Device type ID	23 (17 hex)
Device revision	01 (01 hex) - SW version 01.00.zz
HART specification	6
DD revision	▪ 01 (Dutch)) ▪ 02 (Russian))
Device description files (DTM, DD)	Information and files under: ▪ www.endress.com ▪ www.fieldcommgroup.org/registered-products
HART load	Min. 250 Ω
HART device variables	The following measured values are assigned to the device variables: **Measured values for PV (primary variable)** ▪ Pressure ▪ Flow ▪ Level ▪ Tank content **Measured values for SV, TV (second and third variable)** ▪ Pressure ▪ Totalizer ▪ Level
Supported functions	▪ Burst mode ▪ Additional transmitter status ▪ Device locking ▪ Alternative modes of operation

Wireless HART data

Minimum starting voltage	11.5 V [1]
Start-up current	12 mA (default) or 22 mA (customer setting)
Starting time	5 s
Minimum operating voltage	11.5 V [1]
Multidrop current	4 mA
Time for connection setup	1 s

1) Or higher if operating near ambient temperature limits (−40 to +85 °C (−40 to +185))

Protocol-specific data PROFIBUS PA

Manufacturer ID	17 (11 hex)
Ident number	1542 hex
Profile Version	3.02 SW Version 01.00.zz
GSD Revision	5
DD Revision	1
GSD File	Information and files can be found: ▪ www.endress.com ▪ www.profibus.org
DD Files	

Output values	**Measured values for PV (via Analog Input Function Block)** ▪ Pressure ▪ Level ▪ Flow ▪ Tank content **Measured values for SV** Pressure **Measured values for QV** Totalizer
Input values	Input value sent from PLC, can be shown on display
Supported functions	▪ Identification & Maintenance Simple device identification via control system and nameplate ▪ Condensed status ▪ Automatic ident number adaptation and switchable to following ident numbers: ▪ 9700: Profile-specific transmitter identification number with the "Classic" or "Condensed" status. ▪ 1554: Identification number for Deltabar M ▪ Device locking: The device can be locked by hardware or software.

FOUNDATION Fieldbus protocol-specific data

Device type	0x1021
Device revision	01 (hex)
DD revision	0x01021
Device description files (DTM, DD)	Information and files under: ▪ www.endress.com ▪ www.fieldcommgroup.org/registered-products
CFF revision	0x000102
ITK version	5.2.0
ITK certification driver no.	IT067600
Link Master functionality supported (LAS)	Yes
Link Master/Basic Device selectable	Yes; Factory setting: Basic Device
Number of VCRs	44
Number of link objects in VFD	50
Number of FB schedule objects	40

Virtual communication references (VCRs)

Permanent entries	44
Client VCRs	0
Server VCRs	5
Source VCRs	8
Sink VCRs	0
Subscriber VCRs	12
Publisher VCRs	19

Link settings

Slot time	4
Min. inter PDU delay	12
Max. response delay	40

Transducer Blocks

Block	Content	Output values
TRD1 Block	Contains all parameters related to the measurement	▪ Pressure, flow or level (channel 1) ▪ Process temperature (channel 2) ▪ Measured pressure value (channel 3) ▪ Max. pressure (channel 4) ▪ Level before linearization (channel 5)
Dp Flow Block	Contains flow and totalizer parameter	▪ Totalizer 1 (channel 6) ▪ Totalizer 2 (channel 7)
Diagnostic Block	Contains diagnostic information	Error code via DI channels (channel 10 to 15)
Display Block	Contains parameters to configure the onsite display	No output values

Function blocks

Block	Content	Number of blocks	Execution time	Functionality
Resource Block	The Resource Block contains all the data that uniquely identify the device. It is an electronic version of a nameplate of the device.	1		Enhanced
Analog Input Block 1 Analog Input Block 2	The AI Block receives the measuring data from the Sensor Block, (selectable via a channel number) and makes the data available to other function blocks at its output. Enhancement: digital outputs for process alarms, fail safe mode.	2	25 ms	Enhanced
Digital Input Block	This block contains the discrete data of the Diagnostic Block (selectable via a channel number 10 to 15) and provides them for other blocks at the output.	1	20 ms	Standard
Digital Output Block	This block converts the discrete input and thus initiates an action (selectable via a channel number) in the DP Flow Block or in the TRD1 Block. Channel 20 resets the counter for max. pressure transgressions value and channel 21 resets the totalizer.	1	20 ms	Standard
PID Block	The PID Block serves as a proportional-integral-derivative controller and is used almost universally for closed-loop-control in the field including cascade and feedforward. Input IN can be indicated on the display. The selection is performed in the Display Block (DISPLAY_MAIN_LINE_CONTENT).	1	40 ms	Standard
Arithmetic Block	This block is designed to permit simple use of popular measurement math functions. The user does not have to know how to write equations. The math algorithm is selected by name, chosen by the user for the function to be performed.	1	35 ms	Standard
Input Selector Block	The Input Selector Block facilitates the selection of up to four inputs and generates an output based on the configured action. This block normally receives its inputs from AI Blocks. The block performs maximum, minimum, average and 'first good' signal selection. Inputs IN1 to IN4 can be indicated on the display. The selection is performed in the Display Block (DISPLAY_MAIN_LINE_1_CONTENT).	1	30 ms	Standard
Signal Characterizer Block	The Signal Characterizer Block has two sections, each with an output that is a non-linear function of the respective input. The non-linear function is generated by a single look-up table with 21 arbitrary x-y pairs.	1	40 ms	Standard
Integrator Block	The Integrator Block integrates a variable as a function of the time or accumulates the counts from a Pulse Input Block. The block may be used as a totalizer that counts up until reset or as a batch totalizer that has a setpoint, where the integrated value or accumulated value is compared to pre-trip and trip settings, generating a binary signal when the setpoint is reached.	1	35 ms	Standard

Additional function block information:

Instantiate function blocks	Yes
Number of additional instantiate function blocks	20

Power supply

⚠ WARNING

Limitation of electrical safety due to incorrect connection!

- When using the measuring device in hazardous areas, installation must comply with the corresponding national standards and regulations and the Safety Instructions or Installation or Control Drawings .
- All explosion protection data are given in separate documentation which is available upon request. The Ex documentation is supplied as standard with all Ex devices .
- In accordance with IEC/EN61010 a suitable circuit breaker must be provided for the device.
- HART: Overvoltage protection HAW569-DA2B for the non-hazardous area, ATEX II 2 (1) Ex ia IIC and IEC Ex ia can be ordered as an option (see "Ordering information" section).
- Protective circuits against reverse polarity, HF influences and overvoltage peaks are integrated.

Terminal assignment

HART, PROFIBUS PA, FOUNDATION Fieldbus

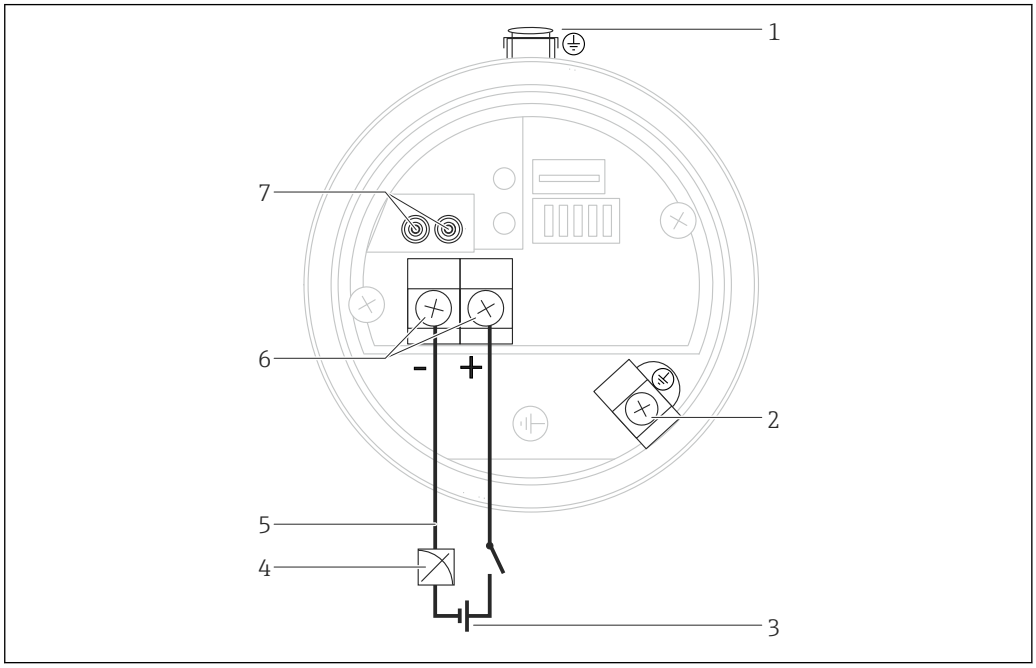

A0023505

1 *External ground terminal (only for devices with certain approvals or if "Measuring point" (TAG) is ordered)*
2 *Internal ground terminal*
3 *Supply voltage → 15*
4 *4 to 20 mA for HART devices*
5 *For HART and FOUNDATION Fieldbus devices: With a handheld terminal, all the parameters can be configured anywhere along the bus line via menu operation.*
6 *Terminals*
7 *For HART devices: test terminals, see section "Taking 4 to 20 mA test signal" → 15*

Supply voltage

4 to 20 mA HART

Type of protection	Supply voltage
Intrinsically safe	11.5 to 30 V DC
▪ Other types of protection ▪ Devices without certificate	11.5 to 45 V DC (versions with plug-in connector 35 V DC)

Taking 4 to 20 mA test signal

A 4 to 20 mA test signal may be measured via the test terminals without interrupting the measurement.

PROFIBUS PA

Version for non-hazardous areas: 9 to 32 V DC

FOUNDATION Fieldbus

Version for non-hazardous areas: 9 to 32 V DC

Current consumption

- PROFIBUS PA: 11 mA ±1 mA, switch-on current corresponds to IEC 61158-2, Clause 21
- FOUNDATION Fieldbus: 16 mA ±1 mA, switch-on current corresponds to IEC 61158-2, Clause 21

Electrical connection

Cable entry	Degree of protection	Option [1]
M20 gland	IP66/68 NEMA 4X/6P	A
M20 thread	IP66/68 NEMA 4X/6P	B
G ½" thread	IP66/68 NEMA 4X/6P	C
NPT ½" thread	IP66/68 NEMA 4X/6P	D
M12 plug	IP66/67 NEMA 4X/6P	I
7/8" plug	IP66/68 NEMA 4X/6P	M
HAN7D plug 90 deg.	IP65	P
M16 valve connector	IP64	V

1) Product Configurator, "Electrical connection" ordering feature

PROFIBUS PA

The digital communication signal is transmitted to the bus via a twin-core connecting cable. The bus line also provides the power supply. For further information on the network structure and grounding, and for further bus system components such as bus cables, see the relevant documentation, e.g., Operating Instructions BA00034S "PROFIBUS DP/PA: Guidelines for planning and commissioning" and the PNO Guideline.

FOUNDATION Fieldbus

The digital communication signal is transmitted to the bus via a twin-core connecting cable. The bus line also provides the power supply. For further information on the network structure and grounding and for further bus system components such as bus cables, see the relevant documentation, e.g., Operating Instructions BA00013S "FOUNDATION Fieldbus Overview" and the FOUNDATION Fieldbus Guideline.

Terminals

- Supply voltage and internal ground terminal: 0.5 to 2.5 mm^2 (20 to 14 AWG)
- External ground terminal: 0.5 to 4 mm^2 (20 to 12 AWG)

Cable entry

Approval	Type	Clamping area
Standard, II1/2G Exia, IS	Plastic M20x1.5	5 to 10 mm (0.2 to 0.39 in)
ATEX II1/2D, II1/2GD Exia, II3G Ex nA	Metal M20x1.5 (Ex e)	7 to 10.5 mm (0.28 to 0.41 in)

For other technical data, see the housing section

Connector

Devices with valve connector (HART)

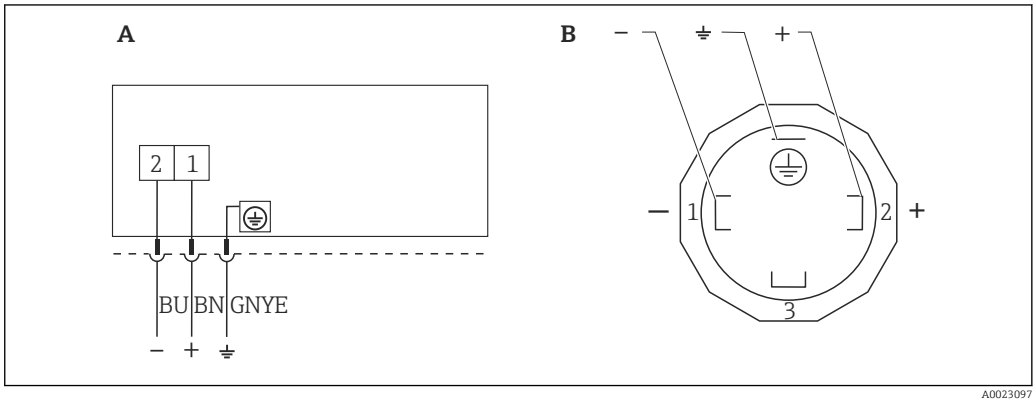

1 *BN = brown, BU = blue, GNYE = green*

A Electrical connection for devices with valve connector
B View of the plug connector at the device

Material: PA 6.6

Connecting devices with Harting plug Han7D (HART)

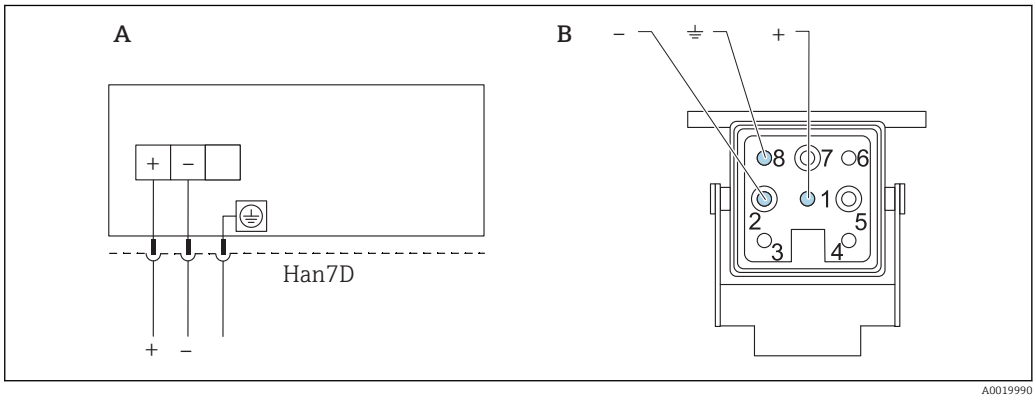

A Electrical connection for devices with Harting plug Han7D
B View of the connection on the device
- Brown
⏚ Green/yellow
+ Blue

Material: CuZn, gold-plated contacts of plug-in jack and plug

Connecting devices with M12 plug (HART, PROFIBUS PA)

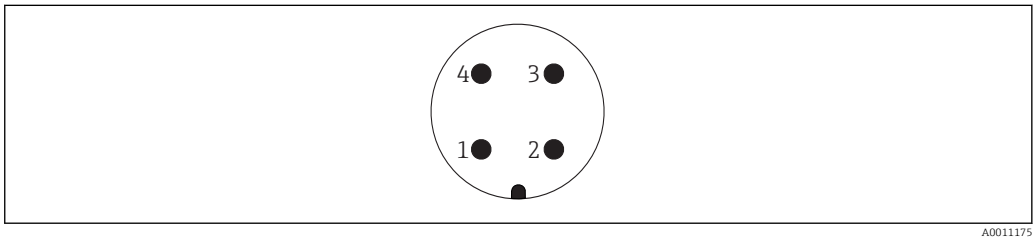

1 Signal +
2 Not assigned
3 Signal –
4 Earth

Endress+Hauser offers the following accessories for devices with an M12 plug:

Plug-in jack M 12x1, straight
- Material: body PA; coupling nut CuZn, nickel-plated
- Degree of protection (fully locked): IP66/67
- Order number: 52006263

Plug-in jack M 12x1, elbowed
- Material: body PBT/PA; coupling nut GD-Zn, nickel-plated
- Degree of protection (fully locked): IP66/67
- Order number: 71114212

Cable 4 x 0.34 mm^2 (20 AWG) with M12 socket, elbowed, screw plug, length 5 m (16 ft)
- Material: body PUR; coupling nut CuSn/Ni; cable PVC
- Degree of protection (fully locked): IP66/67
- Order number: 52010285

Connecting devices with 7/8" plug (HART, FOUNDATION Fieldbus)

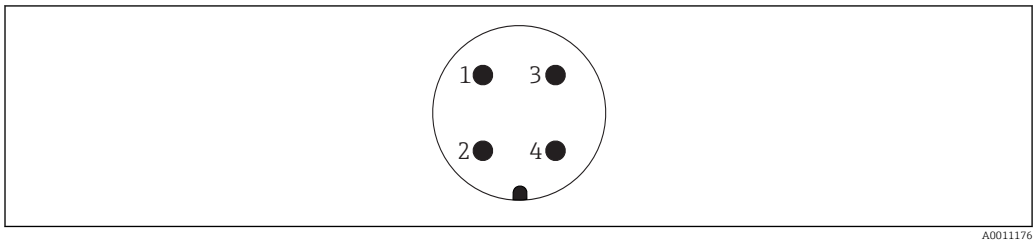

A0011176

1 Signal -
2 Signal +
3 Shield
4 Not assigned

External thread: 7/8 - 16 UNC
- Material: 316L (1.4401)
- Degree of protection: IP66/68

Cable specification

HART

- Endress+Hauser recommends using twisted, shielded twin-core cables.
- The cable outer diameter depends on the cable entry used.

PROFIBUS PA

Endress+Hauser recommends using twisted, shielded twin-core cable, preferably cable type A.

For further information regarding cable specifications, see Operating Instructions BA00034S "PROFIBUS DP/PA: Guidelines for planning and commissioning", the PNO guideline 2.092 "PROFIBUS PA User and Installation Guideline" and IEC 61158-2 (MBP).

FOUNDATION Fieldbus

Use a twisted, shielded twin-core cable, preferably cable type A.

For further information on the cable specifications, see Operating Instructions BA00013S "FOUNDATION Fieldbus Overview", FOUNDATION Fieldbus Guideline and IEC 61158-2 (MBP).

Start-up current

12 mA or 22 mA (selectable)

Residual ripple

No influence on 4 to 20 mA signal up to ±5 % residual ripple within the permitted voltage range [according to HART hardware specification HCF_SPEC-54 (DIN IEC 60381-1)].

Influence of power supply

≤0.001 % of URL/V

Overvoltage protection (optional)

The device can be fitted with overvoltage protection. The overvoltage protection is mounted at the factory on the housing thread (M20x1.5) for the cable gland and is approx. 70 mm (2.76 in) in length (take additional length into account when installing). The device is connected as illustrated in the following graphic.

For details refer to TI01013KDE, XA01003KA3 and BA00304KA2.

Ordering information:

Product Configurator, "Mounted accessories" ordering feature, option NA

Wiring

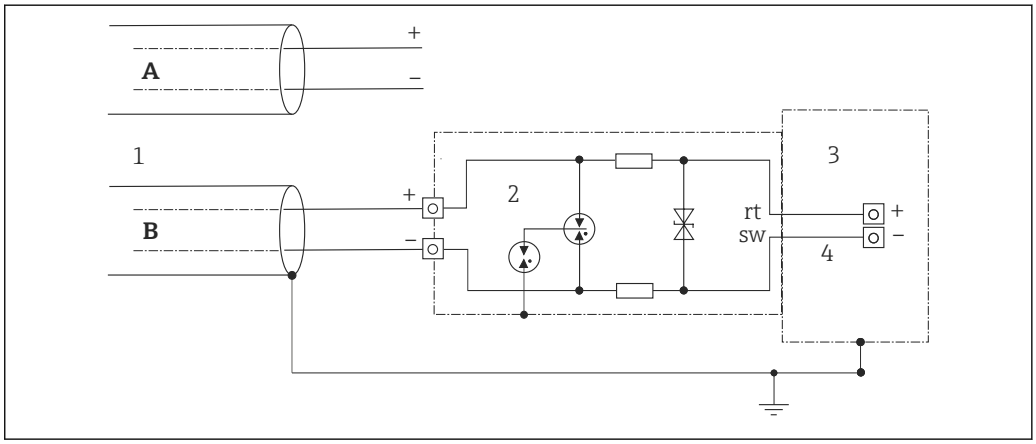

A Without direct shield grounding
B With direct shield grounding
1 Incoming connecting cable
2 HAW569-DA2B
3 Unit to be protected
4 Connecting cable

Performance characteristics

Response time

When recording step responses, it is important to bear in mind that the response times of the sensor might be added to the specified times.

HART

- Acyclic: min. 330 ms, typically 590 ms (depending on command # and number of preambles)
- Cyclic (Burst): min. 160 ms, typically 350 ms (depending on command # and number of preambles)

PROFIBUS PA

- Acyclic: approx. 23 ms to 35 ms (depending on Min. Slave Interval)
- Cyclic: approx. 8 ms to 13 ms (depending on Min. Slave Interval)

FOUNDATION Fieldbus

- Acyclic: typically 70 ms (for standard bus parameter settings)
- Cyclic: max. 20 ms (for standard bus parameter settings)

Reference operating conditions

- As per IEC 60770-1 and IEC 61298-1, Sections 5 to 7
- Ambient temperature T_A = constant, in the range of +21 to +33 °C (+70 to +91 °F)
- Humidity φ = constant, in the range of: 5 to 80 % RH ± 5 %
- Ambient pressure p_A = constant, in the range of: 860 to 1060 mbar (12.47 to 15.37 psi)
- Position of the measuring cell = constant, in the range of: ±1° horizontally and ±1° vertically
- P1 = high pressure side
- Input of "Lo Trim Sensor" and "Hi Trim Sensor" for lower range value and upper range value
- Span URV - LRV
- Membrane material 316L
- Fill fluid: silicone oil
- Side flanges material: AISI 316L
- Supply voltage: 24 V DC ±3 V DC
- Load for HART: 250 Ω

Total performance

The performance characteristics refer to the accuracy of the measuring device. The factors influencing accuracy can be divided into two groups
- Total performance of measuring device
- Installation factors

All performance characteristics are in conformance with ≥ ± 3 sigma.

The total performance of the measuring device comprises the reference accuracy and the ambient temperature effect and is calculated using the following formula:

Total performance = $\pm \sqrt{((E1)^2 + (E2)^2 + (E3)^2)}$

E1 = Reference accuracy

E2 = Ambient temperature effect

E3 = Static pressure effect

Calculation of E2:

Ambient temperature effect per ±28 °C (50 °F)

(corresponds to the range from −3 to +53 °C (+27 to +127 °F))

$E2 = E2_M + E2_E$

$E2_M$ = Main temperature error

$E2_E$ = Electronics error

- The values apply for process isolating diaphragms made of 316L (1.4435)
- The values refer to the calibrated span.

Reference accuracy [E1]

Reference accuracy comprises the non-linearity [IEC 62828-1/DIN EN 61298-2] including the hysteresis [IEC 62828-1/DIN EN 61298-2] and the non-repeatability [IEC 62828-1/DIN EN 61298-2] in accordance with the limit point method as per [IEC 62828-1/DIN EN 60770-2].

10 mbar (0.15 psi) and 30 mbar (0.45 psi) sensor
- Standard: TD 1:1 = ±0.2 %; TD > 1:1 = ±0.2 % · TD
- Platinum: -

100 mbar (1.5 psi) sensor
- Standard: TD 1:1 to TD 4:1 = ±0.1 %; TD > 4:1 = ±(0.012 % · TD + 0.052 %)
- Platinum: TD 1:1 to TD 4:1 = ±0.075 %; TD > 4:1 = ±(0.012 % · TD + 0.027 %)

500 mbar (7.5 psi), 1 bar (15 psi), 3 bar (45 psi), 16 bar (240 psi) and 40 bar (600 psi) sensor
- Standard: TD 1:1 to TD 10:1 = ±0.1 %; TD > 10:1 = ±(0.0015 % · TD + 0.085 %)
- Platinum: TD 1:1 to TD 10:1 = ±0.075 %; TD > 10:1 = ±(0.0015 % · TD + 0.060 %)

Temperature effect [E2]

$E2_M$ - Main temperature error

The output changes due to the effect of the ambient temperature [IEC 62828-1/IEC 61298-3] with respect to the reference temperature [IEC 62828-1/DIN 16086]. The values specify the maximum error due to min./max. ambient or process temperature conditions.

10 mbar (0.15 psi) and 30 mbar (0.45 psi) sensor
- Standard: ±(0.31 % · TD + 0.5 %)
- Platinum: -

100 mbar (1.5 psi) sensor
- Standard: ±(0.18 % · TD + 0.02 %)
- Platinum: ±(0.18 % · TD + 0.02 %)

500 mbar (7.5 psi), 1 bar (15 psi) and 3 bar (45 psi) sensor
- Standard: ±(0.08 % · TD + 0.05 %)
- Platinum: ±(0.08 % · TD + 0.05 %)

16 bar (240 psi) sensor
- Standard: ±(0.1 % · TD + 0.1 %)
- Platinum: ±(0.1 % · TD + 0.1 %)

40 bar (600 psi) sensor
- Standard: ±(0.08 % · TD + 0.05 %)
- Platinum: ±(0.08 % · TD + 0.05 %)

$E2_E$ - Electronics error

- Analog output (4 to 20 mA): 0.2 %
- Digital output (HART/PA/FF): 0 %

$E3_M$ - Main static pressure error

The static pressure effect refers to the effect on the output due to changes in the static pressure of the process (difference between the output at each static pressure and the output at atmospheric pressure [IEC 62828-2/IEC 61298-3] and therefore the combination of the influence of the operating pressure on the zero point and the span).

10 mbar (0.15 psi) sensor
Standard
- Influence on the zero point: ± 0.20 % · TD per 1 bar (14.5 psi)
- Influence on the span: ± 0.20 % per 1 bar (14.5 psi)

30 mbar (0.45 psi) sensor
Standard
- Influence on the zero point: ± 0.07 % · TD per 1 bar (14.5 psi)
- Influence on the span: ± 0.07 % per 1 bar (14.5 psi)

100 mbar (1.5 psi) sensor
- Standard
  - Influence on the zero point: ± 0.15 % · TD per 70 bar (1 015 psi)
  - Influence on the span: ± 0.14 % per 70 bar (1 015 psi)
- Platinum
  - Influence on the zero point: ± 0.15 % · TD per 70 bar (1 015 psi)
  - Influence on the span: ± 0.14 % per 70 bar (1 015 psi)

500 mbar (7.5 psi), 1 bar (15 psi), 3 bar (45 psi), 16 bar (240 psi) and 40 bar (600 psi) sensor
- Standard
  - Influence on the zero point: ± 0.075 % · TD per 70 bar (1 015 psi)
  - Influence on the span: ± 0.14 % per 70 bar (1 015 psi)
- Platinum
  - Influence on the zero point: ± 0.075 % · TD per 70 bar (1 015 psi)
  - Influence on the span: ± 0.14 % per 70 bar (1 015 psi)

Calculation of the total performance with the Endress+Hauser Applicator

Detailed measured errors, such as for other temperature ranges, for example, can be calculated with the Applicator "Sizing Pressure Performance".

A0038927

Resolution

- Current output: 1 µA
- Display: can be set (factory setting: presentation of the maximum accuracy of the transmitter)

Total error

The total error of the measuring device comprises the total performance and the influence of long-term stability and is calculated using the following formula:

Total error = total performance + long-term stability

Calculation of the total error with the Endress+Hauser Applicator

Detailed measured errors, such as for other temperature ranges, for example, can be calculated with the Applicator "Sizing Pressure Performance".

A0038927

Long-term stability

10 mbar (0.15 psi) and 30 mbar (0.45 psi) sensor
- 1 year: ± 0.25 %
- 5 years: ± 1.25 %
- 10 years: ± 1.50 %

100 mbar (1.5 psi) sensor
- 1 year: ± 0.18 %
- 5 years: ± 0.35 %
- 10 years: ± 0.50 %

500 mbar (7.5 psi), 1 bar (15 psi), 3 bar (45 psi), 16 bar (240 psi) and 40 bar (600 psi) sensor
- 1 year: ± 0.05 %
- 5 years: ± 0.13 %
- 10 years: ± 0.23 %

Response time T63 and T90

Dead time, time constant

Presentation of the dead time and the time constant as per DIN 16086:

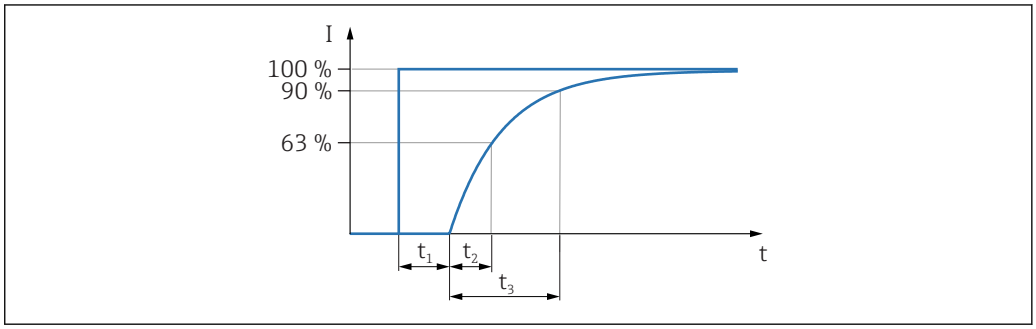

A0019786

Dynamic behavior, current output (HART electronics)

	Dead time (t_1)	Time constant T63 (= t_2)	Time constant T90 (= t_3)
Max.	60 ms	90 ms	210 ms

Dynamic behavior, digital output (HART electronics)

	Dead time (t_1)	Dead time (t_1) + Time constant T63 (= t_2)	Dead time (t_1) + Time constant T90 (= t_3)
Min.	220 ms	310 ms	370 ms
Max.	1020 ms	1110 ms	1170 ms

Reading cycle

- Acyclic: max. 3/s, typically 1/s (depends on command # and number of preambles)
- Cyclic (Burst): max. 3/s, typically 2/s

The device commands the BURST MODE function for cyclic value transmission via the HART communication protocol.

Cycle time (update time)

Cyclic (Burst): min. 300 ms

Dynamic behavior, PROFIBUS PA

	Dead time (t_1)	Dead time (t_1) + Time constant T63 (= t_2)	Dead time (t_1) + Time constant T90 (= t_3)
Min.	95 ms	185 ms	245 ms
Max.	1195 ms	1285 ms	1345 ms

Reading cycle (PLC)

- Acyclic: typically 25/s
- Cyclic: typically 30/s (depending on the number and type of function blocks used in the closed-control loop)

Cycle time (update time)

Min. 100 ms

The cycle time in a bus segment in cyclic data communication depends on the number of devices, on the segment coupler used and on the internal PLC cycle time.

Dynamic behavior, FOUNDATION Fieldbus

	Dead time (t_1)	**Dead time (t_1) + Time constant T63 (= t_2)**	**Dead time (t_1) + Time constant T90 (= t_3)**
Min.	105 ms	195 ms	255 ms
Max.	1105 ms	1195 ms	1255 ms

Reading cycle

- Acyclic: typically 5/s
- Cyclic: max. 10/s (depending on the number and type of function blocks used in a closed-control loop)

Cycle time (update time)

Cyclic: min. 100 ms

Installation factors

Influence of the installation position

The recommended maximum angle to the axis of the diaphragm is 10° and results in a measuring error of ±0.72 mbar (0.01 psi). The value is doubled for devices with inert oil.

Position-dependent zero point shift can be corrected → 26.

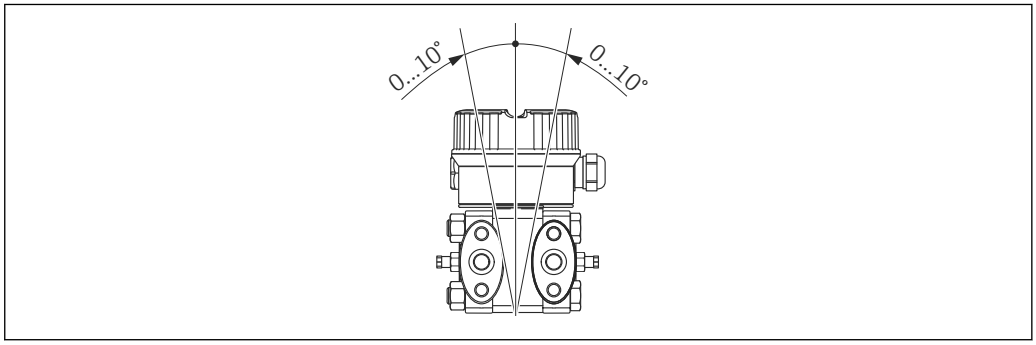

A0023099

Vibration effects

Test standard	Vibration effects
GL VI-7-2 ▪ Part 7: Guidelines for the Performance of Type Approvals ▪ Chapter 2: Test Requirements for Electrical /Electronic Equipment and Systems	Guaranteed for 5 to 25 Hz: ±1.6 mm (0.06 in); 25 to 100 Hz: 4 g in all 3 axes
IEC 61298-3 IEC 60068-2-6	≤ reference accuracy to 10 to 60 Hz: ±0.35 mm (0.01 in); 60 to 2000 Hz: 5 g in all 3 axes

Warm-up period

- 4 to 20 mA HART: ≤5 s
- PROFIBUS PA: ≤8 s
- FOUNDATION Fieldbus: ≤20 s (after a TOTAL reset ≤45 s)

Mounting

General installation instructions

The position-dependent zero point shift can be corrected:
- directly at the device via operating keys on the electronic insert
- directly at the device via operating keys on the display
- via digital communication if the cover is not open .

- Endress+Hauser offers a mounting bracket for installing the device on pipes or walls.
- When measuring in media containing solids, such as dirty liquids, installing separators and drain valves is useful for capturing and removing sediment.
- Using a three-valve or five-valve manifold allows for easy commissioning, installation and maintenance without interrupting the process.
- Lay the piping with a monotonic gradient of at least 10 %.
- When routing the piping outdoors, ensure sufficient anti-freeze protection, e.g. by using pipe heat tracing.

Measuring arrangement

Flow measurement

- Measuring arrangement for gases: Mount device above the measuring point.
- Measuring arrangement for liquids and vapours: Mount the device below the measuring point.
- For flow measurement in vapours, mount the condensate traps at the same level as the same the tapping point and at the same distance from Deltabar M.

Level measurement

Measuring arrangement level measurement in open tanks
Mount device below the lower measuring connection. The low-pressure side is open to atmosphere pressure.

Measuring arrangement level measurement in closed tanks and closed tanks with superimposed vapor
- Mount device below the lower measuring connection. Always connect the low-pressure side above the maximum level.
- In the case of level measurement in closed tanks with superimposed vapor, a condensate trap ensures pressure which remains constant on the low-pressure side.

Pressure measurement

- Measuring arrangement for gases: Mount device above the measuring point.
- Measuring arrangement for liquids and vapours: Mount the device below the measuring point.
- For differential pressure measurement in vapor, mount the condensate traps at the same level as the same the tapping point and at the same distance from Deltabar M.

Wall and pipe-mounting

Endress+Hauser offers the following mounting brackets for installing the device on pipes or walls:

Standard design	Heavy-duty version
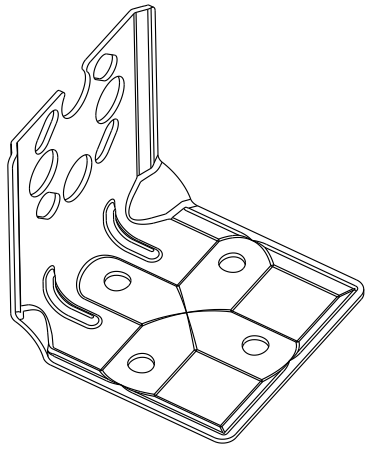 A0031326	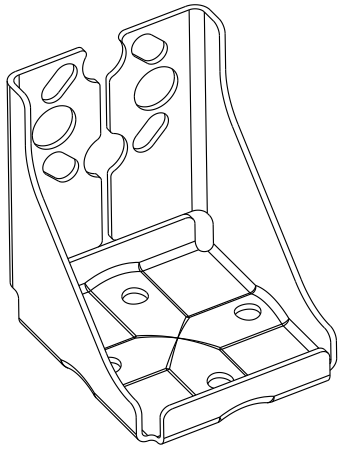 A0031327

The standard mounting bracket version is **not** suitable for use in an application subject to vibrations.

The vibration resistance of the heavy-duty version of the mounting bracket has been tested according to IEC 61298-3, see the "Vibration resistance" section → 30.

When using a valve block, the block's dimensions must be taken into account.

Bracket for wall and pipe mounting including retaining bracket for pipe mounting and two nuts.

Technical data (e.g. dimensions or order numbers for screws) see accessory document SD01553P/00/EN.

Ordering information:
- Standard design: Product Configurator "Accessory Enclosed" ordering feature, version "PD"
- Heavy-duty version: Product Configurator, order code for "Accessories enclosed" option "PB"
- The adapter plate is part of the delivery if the order option "PB" or "PD" was selected in combination with the variant V1 or H2 from the process connection.

Wall and pipe-mounting manifold (optional)

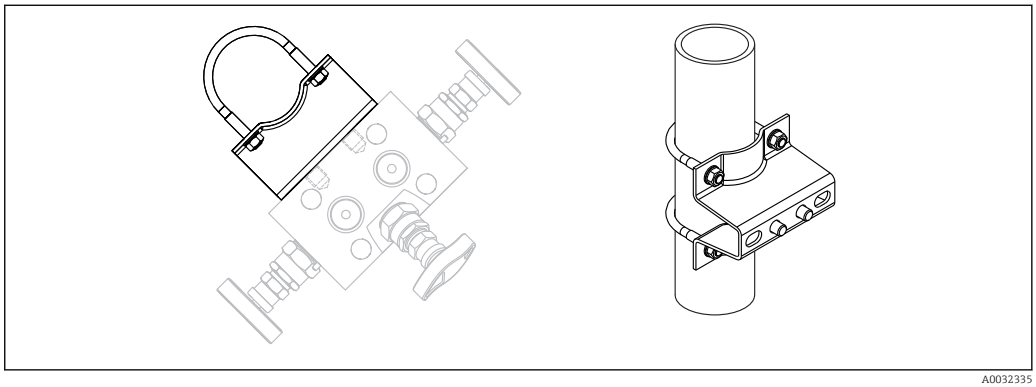

A0032335

Technical data (e.g. dimensions or order numbers for screws) see accessory document SD01553P/00/EN.

Ordering information:

Product Configurator, order code for "Accessories enclosed", option "PJ"

Typical installation arrangements

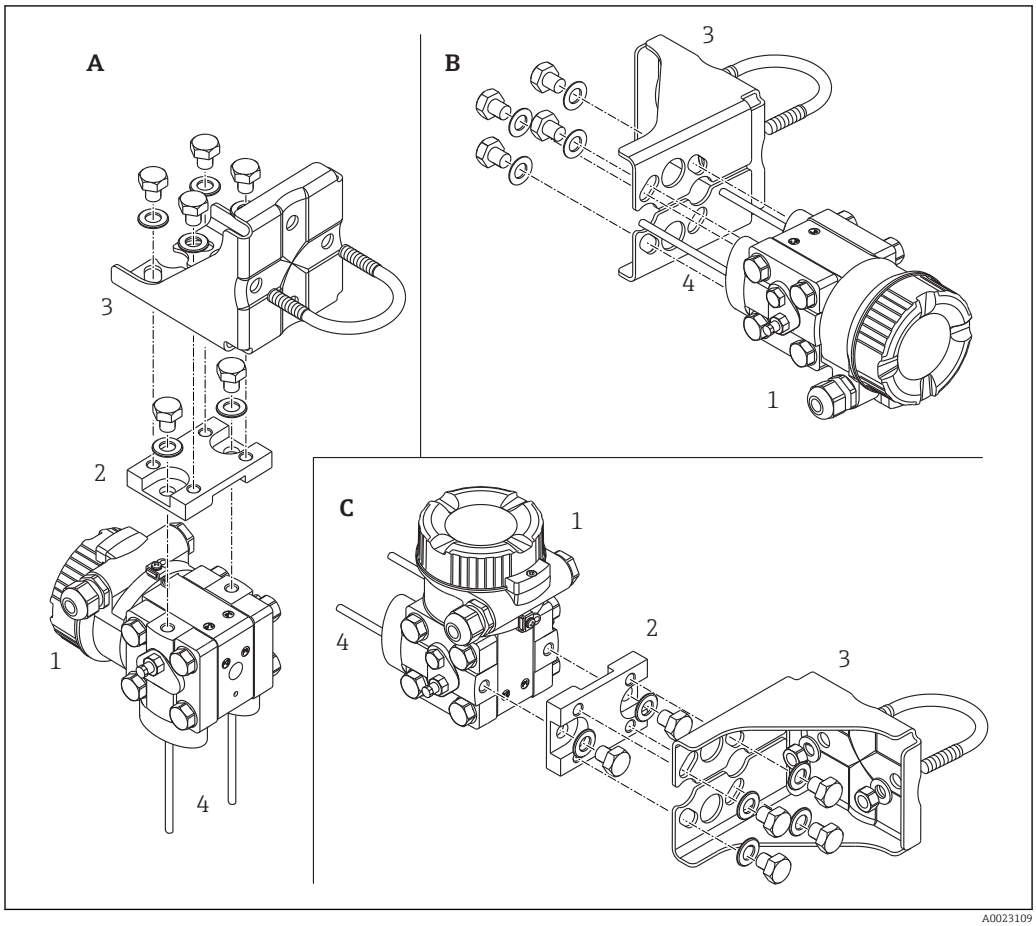

A Impulse line vertical, version V1, alignment 90°
B Impulse line horizontal, version H1, alignment 180°
C Impulse line horizontal, version H2, alignment 90°
1 Deltabar M
2 Adapter plate
3 Mounting bracket
4 Pressure line

Position	Process connection	Gland	Installation	Material	Option [1) 2)]
A	NPT1/4-18 IEC61518	UNF7/16-20	Impulse line vertical, version V1, alignment 90°	1.4408 / CF3M [3)] / AISI 316L	HAJ
	NPT1/4-18 IEC61518	UNF7/16-20	Impulse line vertical, version V1, alignment 90°	C22.8	HA4
	NPT1/4-18 IEC61518	M10	Impulse line vertical, version V1, alignment 90°	1.4408 / CF3M [3)] / AISI 316L	HBJ
	NPT1/4-18 IEC61518	M10	Impulse line vertical, version V1, alignment 90°	C22.8	HB4
B	NPT1/4-18 IEC61518	UNF7/16-20	Impulse line horizontal, version H1, alignment 180°	1.4408 / CF3M [3)] / AISI 316L	HGJ
	NPT1/4-18 IEC61518	UNF7/16-20	Impulse line horizontal, version H1, alignment 180°	C22.8	HG4
	NPT1/4-18 IEC61518	M10	Impulse line horizontal, version H1, alignment 180°	1.4408 / CF3M [3)] / AISI 316L	HHJ
	NPT1/4-18 IEC61518	M10	Impulse line horizontal, version H1, alignment 180°	C22.8	HH4
C	NPT1/4-18 IEC61518	UNF7/16-20	Impulse line horizontal, version H2, alignment 90°	1.4408 / CF3M [3)] / AISI 316L	HNJ
	NPT1/4-18 IEC61518	UNF7/16-20	Impulse line horizontal, version H2, alignment 90°	C22.8	HN4
	NPT1/4-18 IEC61518	M10	Impulse line horizontal, version H2, alignment 90°	1.4408 / CF3M [3)] / AISI 316L	HOJ
	NPT1/4-18 IEC61518	M10	Impulse line horizontal, version H2, alignment 90°	C22.8	HO4

1) Product configurator "Process connection" ordering feature
2) Additional technical data see chapter "Mechanical construuction"
3) Cast equivalent to AISI 316L

Oxygen applications

Oxygen and other gases can react explosively to oils, grease and plastics, such that, among other things, the following precautions must be taken:
- All components of the system, such as measuring devices, must be cleaned in accordance with the BAM (DIN 19247) requirements.
- Depending on the materials used, a certain maximum temperature and a maximum pressure must not be exceeded for oxygen applications.

The devices suitable for gaseous oxygen applications are listed in the following table with the specification p_{max}.

Order code for devices [1], cleaned for oxygen applications	p_{max} for oxygen applications	T_{max} for oxygen applications	Option [2]
PMD55 [3]	30 bar (450 psi)	−18 to +60 °C (0 to +140 °F)	A (FKM Viton)

1) Devices only, not accessories or enclosed accessories.
2) Product Configurator, "Seal" ordering feature
3) Product Configurator, "Service" ordering feature, option "HB

PWIS cleaning

Special cleaning of the transmitter to remove paint-wetting substances, for use in paint shops, for instance.

Ordering information:

Ordering information: Product Configurator, "Service" ordering feature, option HC

The stability of the materials used must be checked before using them in the medium.

Ultrapure gas applications

Endress+Hauser also provides devices which have been cleaned of oil and grease for special applications, such as for ultrapure gas. No special restrictions regarding the process conditions apply to these devices.

Ordering information:
Product Configurator, "Service" ordering feature, option "HA"

Environment

Ambient temperature range

Device

- Without LCD display: −40 to +85 °C (−40 to +185 °F)
- With LCD display: −20 to +70 °C (−4 to +158 °F)
  Extended temperature operation range (−40 to +85 °C (−40 to +185 °F)) with limitations in optical properties, such as display speed and contrast, for example

Included, optional accessories

M12 plug-in jack, 90° angle and 5 meter cable: −25 to +70 °C (−13 to +158 °F)

Ambient temperature range

- −40 to +85 °C (−40 to +185 °F)
- Onsite display: −20 to +70 °C (−4 to +158 °F). Enhanced temperature range with limitations concerning display speed and contrast: −40 to +85 °C (−40 to +185 °F)

For devices for use in hazardous areas, see Safety instructions, Installation or Control Drawing

Storage temperature range

- −40 to +90 °C (−40 to +185 °F)
- Onsite display: −40 to +85 °C (−40 to +185 °F)

Climate class

Class 4K4H (air temperature: −20 to +55 °C (−4 to +131 °F), relative humidity: 4 to 100%) satisfied as per DIN EN 60721-3-4 (condensation possible)

Degree of protection

Ordering information:
Product Configurator, "Electrical connection" ordering feature

Vibration resistance

Device	Test standard	Vibration resistance
PMD55	GL	Guaranteed for 5 to 25 Hz: ±1.6 mm (0.06 in); 25 to 100 Hz: 4 g in all 3 axes
	IEC 61298-3	Guaranteed for 10 to 60 Hz: ±0.35 mm (0.014 in); 60 to 2000 Hz: 5 g in all 3 axes
PMD55 with mounting bracket (heavy duty design)	IEC 61298-3	Guaranteed for 10 to 60 Hz: ±0.15 mm (0.006 in); 60 to 500 Hz: 2 g in all 3 axes

Electromagnetic compatibility

- Electromagnetic compatibility as per all the relevant requirements of the EN 61326 series and NAMUR Recommendation EMC (NE21).
- Max. deviation : < 0.5 % of the span
- Larger deviations possible with 10 mbar (0.15 psi) measuring cell.

Further details can be found in the manufacturer declaration.

Process

Process temperature limits (temperature at transmitter)

- Process connections made of 316L: −40 to +85 °C (−40 to +185 °F)
- Process connections made of C22.8: −10 to +85 °C (+14 to +185 °F)

The process temperature at the transmitter can be reduced through the use of impulse lines.

- For oxygen applications, observe → 🖹 29 ordering feature.
- Observe the process temperature range of the seal (see also the following section "Process temperature range, Seals").

Process temperature range, Seals

Seal	Process temperature range [1]	Option [2]
FKM Viton	−20 to +85 °C (−4 to +185 °F)	A
PTFE	−40 to +85 °C (−40 to +185 °F)	C
PTFE (EPDM Kern)	−40 to +85 °C (−40 to +185 °F) [3]	D
NBR	−20 to +85 °C (−4 to +185 °F)	F
EPDM	−20 to +85 °C (−4 to +185 °F)	J

1) Restricions for oxygen applications, → 🖹 29
2) Product Configurator "Seal" ordering feature
3) Only 10 mbar (0.15 psi) und 30 mbar (0.45 psi) measuring cell.

Pressure specifications

WARNING

The maximum pressure for the measuring device depends on the lowest-rated element with regard to pressure (components are: process connection, optional mounted parts or accessories).

- ▶ Only operate the measuring device within the prescribed limits of the components!
- ▶ MWP (maximum working pressure): The MWP is specified on the nameplate. This value refers to a reference temperature of +20 °C (+68 °F) and may be applied to the device for an unlimited time. Note temperature dependence of MWP. For flanges, refer to the following standards for the permitted pressure values at higher temperatures: EN 1092-1 (with regard to their stability/ temperature property, the materials 1.4435 and 1.4404 are grouped together under EN 1092-1; the chemical composition of the two materials can be identical.), ASME B 16.5a, JIS B 2220 (the latest version of the standard applies in each case). MWP data that deviate from this are provided in the relevant sections of the Technical Information.
- ▶ The test pressure corresponds to the overpressure limit (OPL) of the overall system. This value refers to a reference temperature of +20 °C (+68 °F).
- ▶ The Pressure Equipment Directive (2014/68/EU) uses the abbreviation "PS". The abbreviation "PS" corresponds to the MWP (maximum working pressure) of the measuring device.
- ▶ In the case of sensor range and process connections where the over pressure limit (OPL) of the process connection is smaller than the nominal value of the sensor, the device is set at the factory, at the very maximum, to the OPL value of the process connection. If you want to use the entire sensor range, select a process connection with a higher OPL value.
- ▶ Oxygen applications: In oxygen applications, the values for "p_{max} and T_{max} for oxygen applications may not be exceeded.

Mechanical construction

For the dimensions, see the Product Configurator: www.endress.com

Search for product → click "Configuration" to the right of the product image → after configuration click "CAD"

The following dimensions are rounded values. For this reason, they may deviate slightly from the dimensions given on www.endress.com.

Housing

Material		Weight	Option [1]
Housing [2]	Cover seal	kg (lbs)	
Aluminum, without viewing window	EPDM	1.0 (2.21)	A
Aluminum, with viewing window	EPDM	1.1 (2.43)	B

1) Degree of protection dependent on cable entry used
2) Product Configurator "Housing" ordering feature → 16

Process connection

Oval flange, connection 1/4-18 NPT IEC61518

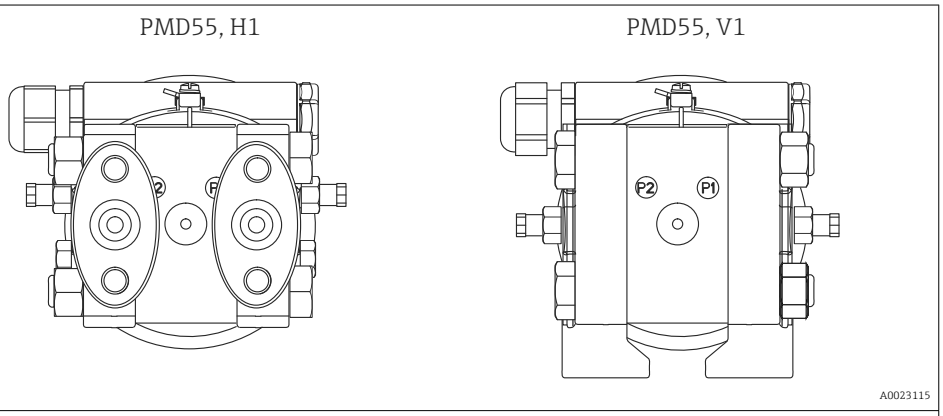

Designation of the process connections "P1" and "P2"

Ordering information

- Product Configurator "Process connection" ordering feature
- As Accessorry: Product Configurator "Accessory Enclosed" ordering feature, option "P1"

Factory setting

- P1: High pressure side (+)
- P2: Low pressure side (-)

This setting can be changed via a DIP switch in the connection department of the instrument and via the operating menu:

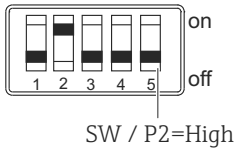

DIP switches in the connection compartment of the device. DIP switch 5 defines the high pressure side.

- DIP5 = off: The high pressure side is defined in the operating menu.
  (Menu "Setup", parameter 006: "High pressure side"; default: P1)
- DIP 5 = on: P2 is the high pressure side, independent of the setting in the operating menu.

**Dimensions V1 option;
Impulse pipe vertical;
alignment 90**

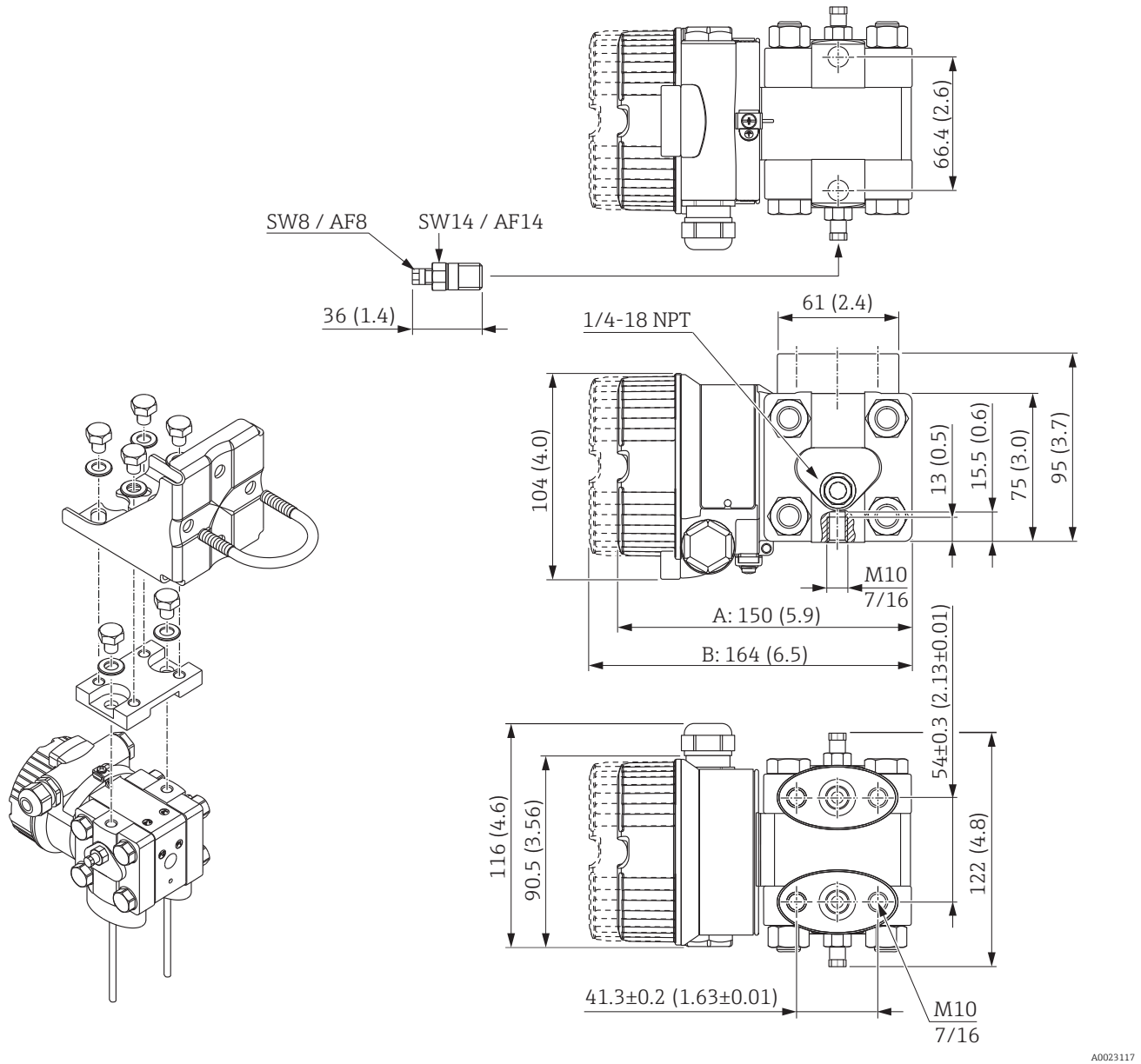

A Version cover without viewing window
B Version cover with viewing window

Engineering unit mm (in)

Designation	Material	Weight	Option [1]
		kg (lbs)	
NPT 1/4-18 IEC61518 UNF 7/16-20	1.4408 / CF3M [2] / AISI 316L	3 (6.62)	HAJ
NPT 1/4-18 IEC61518 UNF 7/16-20	C22.8		HA4
NPT 1/4-18 IEC61518 M10	1.4408 / CF3M [2] / AISI 316L		HBJ
NPT 1/4-18 IEC61518 M10	C22.8		HB4

1) Product Configuration "Process Connection" ordering feature
2) Cast equivalent to AISI 316L

Dimensions H1 option;
Impulse pipe horizontal;
alignment 180°

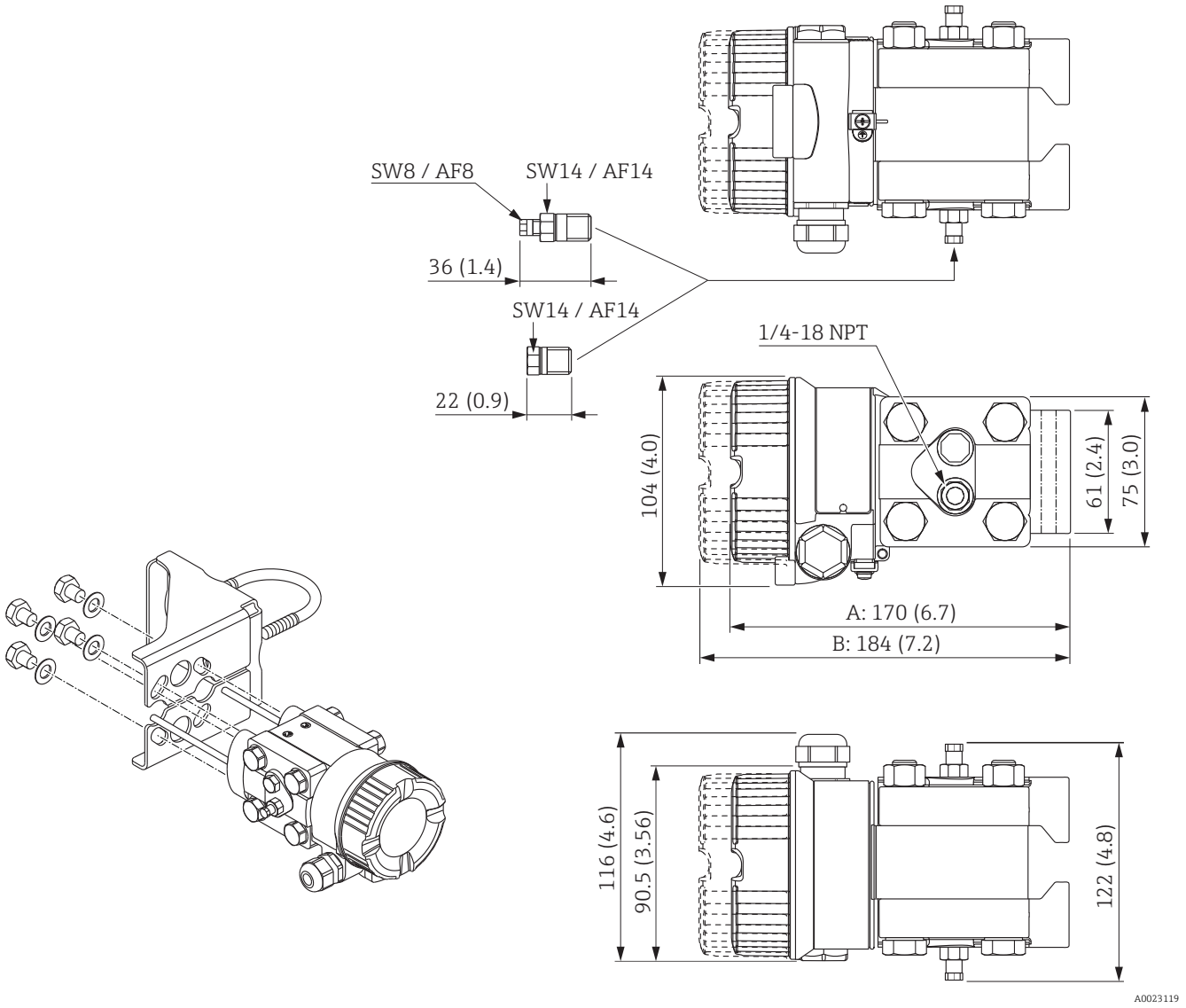

A Version cover without viewing window
B Version cover with viewing window

Engineering unit mm (in)

Designation	Material	Weight kg (lbs)	Option [1]
NPT 1/4-18 IEC61518 UNF 7/16-20	1.4408 / CF3M [2] / AISI 316L	3 (6.62)	HGJ
NPT 1/4-18 IEC61518 UNF 7/16-20	C22.8		HG4
NPT 1/4-18 IEC61518 M10	1.4408 / CF3M [2] / AISI 316L		HHJ
NPT 1/4-18 IEC61518 M10	C22.8		HH4

1) Product Configuration "Process Connection" ordering feature
2) Cast equivalent to AISI 316L

**Dimensions H2 option;
Impulse pipe horizontal;
alignment 90°**

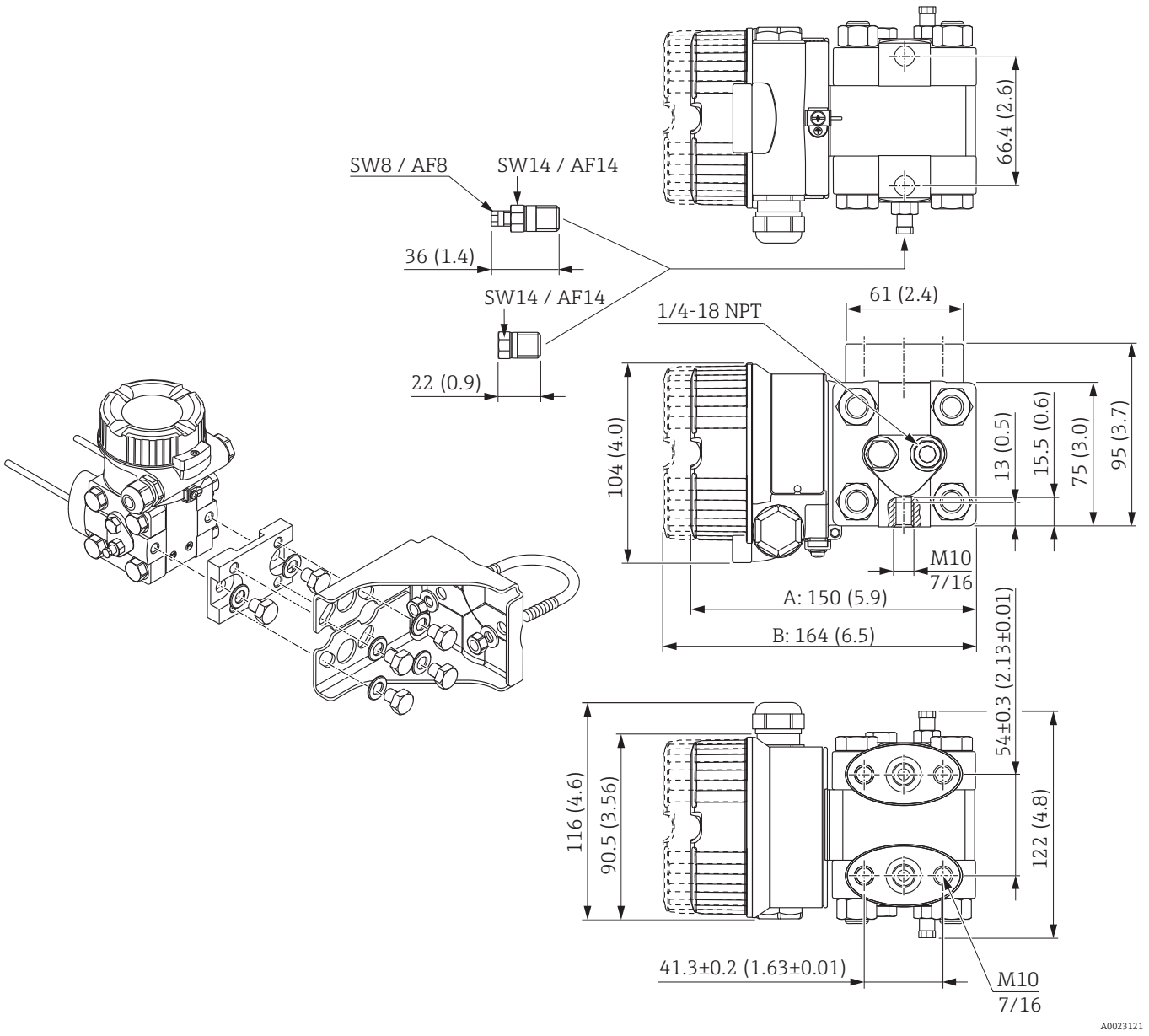

A Version cover without viewing window
B Version cover with viewing window

Engineering unit mm (in)

Designation	Material	Weight	Option [1]
		kg (lbs)	
NPT 1/4-18 IEC61518 UNF 7/16-20	1.4408 / CF3M [2] / AISI 316L	3 (6.62)	HNJ
NPT 1/4-18 IEC61518 UNF 7/16-20	C22.8		HN4
NPT 1/4-18 IEC61518 M10	1.4408 / CF3M [2] / AISI 316L		HOJ
NPT 1/4-18 IEC61518 M10	C22.8		HO4

1) Product Configuration "Process Connection" ordering feature
2) Cast equivalent to AISI 316L

DA63M- valve manifold (optional)

Endress+Hauser supplies milled valve manifolds via the transmitter's product structure in the following versions:

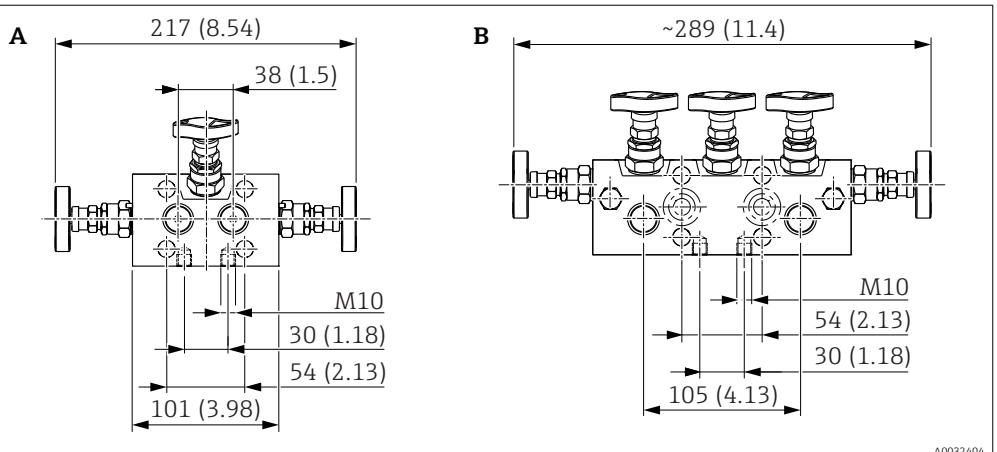

A 3-way valve manifold
B 5-way valve manifold

Engineering unit mm (in)

3-way or 5-way valve manifolds in 316L or AlloyC can be ordered
- as **enclosed** accessories (screws and seals for mounting included)
- as a **mounted** accessory (mounted valve manifolds are supplied with a documented leakage test).

Certificates ordered with the equipment (e.g., 3.1 material certificate and NACE) and tests (e.g. PMI and pressure test) apply to the transmitter and the valve manifold.

For other details (order option, dimension, weight, materials), see SD01553P/00/EN "Mechanical accessories for pressure measuring devices".

During the operating life of the valves, it may be necessary to re-tighten the packing.

Mounting on valve manifold

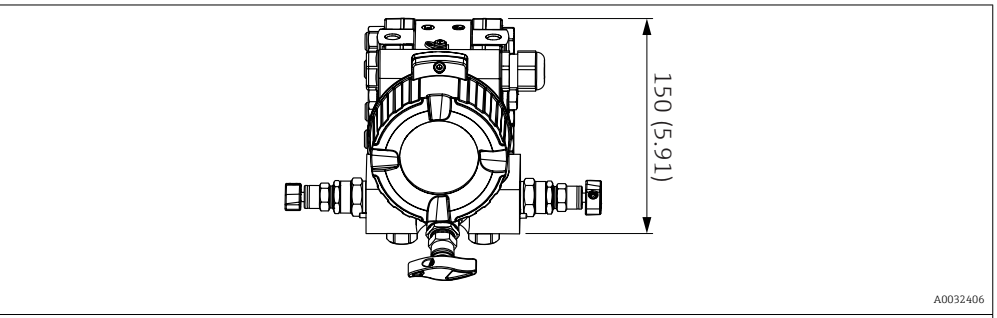

Engineering unit mm (in)

Ordering information:

Product Configurator, "Mounted accessories" ordering feature

Materials not in contact with process

Housing

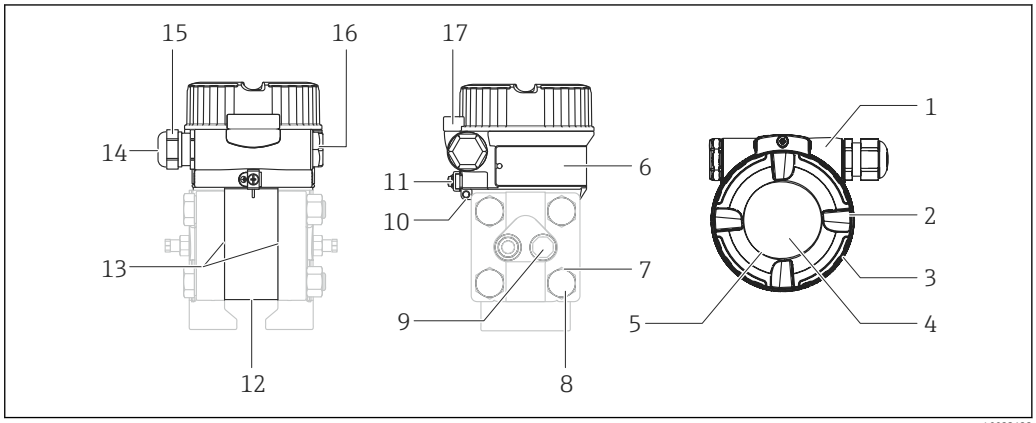

A0023122

Item number	Component	Material
1	F30 housing, RAL 5012 (blue)	Die-cast aluminum with protective powder-coating on polyester base
2	Cover, RAL 7035 (gray)	Die-cast aluminum with protective powder-coating on polyester base
3	Cover seal	HNBR
4	Sight glass	Mineral glass
5	Sight glass seal	Silicone (VMQ)
6	Nameplates	Plastic film
7	Washers	A4
8	Screws	AISI 316 L (1.4404)
9	Screw	AISI 316 L (1.4404)
10	External ground terminal	AISI 304 (1.4301)
11	Fastening for wired-on tag plate	AISI 304 (1.4301)/ AISI 316 (1.4401)
12	Pressure compensation filter	Silicone
13	Sealing ring	EPDM
14	Seal of cable gland and plug	EPDM/NBR
15	Cable gland	Polyamide (PA) or CuZn nickel-plated
16	Plug	PBT-GF30 FR
		for dust ignition-proof, Ex d, FM XP and CSA XP: AISI 316L (1.4435)
17	Cover clamp	Clamp AISI 316L (1.4435), screw A4

Fill fluid

Oil	Option [1]
Silicone oil	1
Inert oil	2

1) Product Configurator, order code for "Fill fluid"

Connecting parts

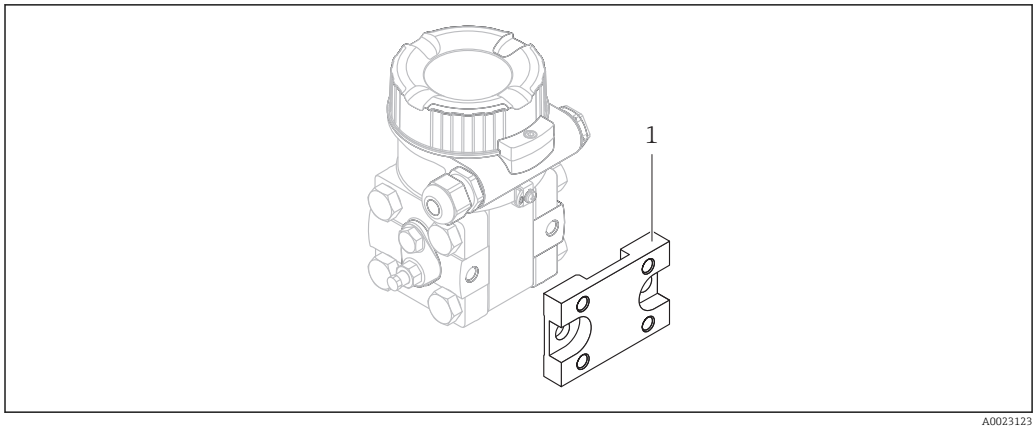

A0023123

Item number	Component	Material
1	Adapter plate for mounting bracket	AISI 316L

Materials in contact with process

NOTICE

- Device components in contact with the process are listed in the "Mechanical construction" → 32 and "Ordering information" → 47 sections.

TSE Certificate of Suitability (Transmissible Spongiform Encephalopathy)

The following applies to all device components in contact with the process:

- They do not contain any materials derived from animals.
- No additives or operating materials derived from animals are used in production or processing.

Side flanges

Endress+Hauser supplies side flanges in stainless steel AISI 316L as per material numbers 1.4404 or 1.4408, or side flanges made from C22.8 (Zn 5-8/1.0460 + Zn 5-8) with zinc plating. The zinc-plated carbon steel side flange is not recommended for water applications due to hydrogen diffusion. Endress+Hauser therefore recommends the use of side flanges made of 316L.

Process membrane

Material	Option [1)]
316L	A
Alloy C	C

1) Product Configurator, "Material of the process membrane" ordering feature

Oval flange adapters

AISI 316L (1.4404)

Vent valves

AISI 316L (1.4404)

Operability

Operating concept

Operator-oriented menu structure for user-specific tasks

- Commissioning
- Operation
- Diagnosis
- Expert level

Quick and safe commissioning

Guided menus for applications

Reliable operation

- Local operation possible in several languages
- Standardized operation at the device and in the operating tools
- Parameters can be locked/unlocked using the device's write protection switch , using the device software or via remote control

Efficient diagnostic behavior increases measurement availability

- Remedial measures are integrated in plain text
- Diverse simulation options

Local operation

Local display (optional)

A 4-line liquid crystal display (LCD) is used for display and operation. The local display shows measured values, dialog texts as well as fault and notice messages in plain text, thereby supporting the user at every stage of operation. The liquid crystal display of the device can be turned in 90° stages. Depending on the orientation of the device, this makes it easy to operate the device and read the measured values.

Functions:

- 8-digit measured value display, including algebraic sign and decimal point, in relation to the set pressure range.
  - Bar graph for 4 to 20 mA HART as current display
  - Bar graph for PROFIBUS PA as graphic display of the standardized value of the AI Block
  - Bar graph for FOUNDATION Fieldbus as graphic display of the transducer output
- Simple and complete menu guidance as parameters are divided into several levels and groups
- Each parameter is assigned a 3-digit ID number for easy navigation
- Possibility of configuring the display to suit individual requirements and preferences, e.g. language, alternating display, display of other measured values such as sensor temperature, contrast setting
- Comprehensive diagnostic functions (fault and warning message, maximum/minimum indicators, etc.)

Overview

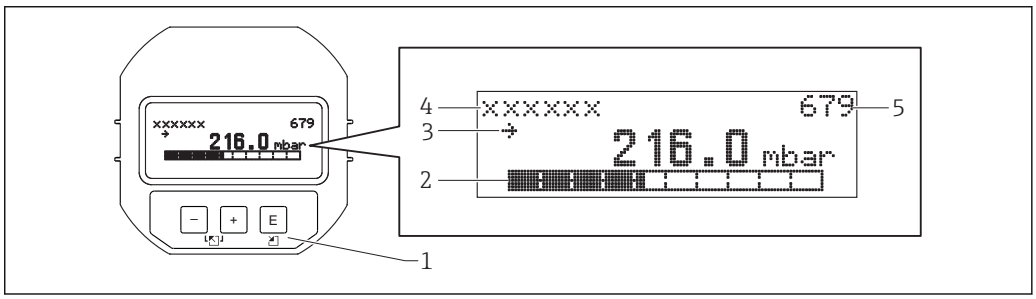

A0016498

1 Operating keys
2 Bar graph
3 Symbol
4 Header
5 Parameter ID number

Ordering information: Product Configurator, order code for "Output, operation"

Function	Operation via display		
	HART	PROFIBUS PA	FOUNDATION Fieldbus
Position adjustment (zero point correction)	✔	✔	✔
Setting lower range value and upper range value - reference pressure present at the device	✔	✔	✔
Device reset	✔	✔	✔
Locking and unlocking parameters relevant to the measured value	✔	✔	✔
Switching damping on and off	✔	✔	✔

Operating keys and elements located inside on the electronic insert

Function	Operation with operating keys and elements on the electronic insert		
	HART	PROFIBUS PA	FOUNDATION Fieldbus
Position adjustment (zero point correction)	✔	✔	✔
Setting lower range value and upper range value - reference pressure present at the device	✔	–	–
Device reset	✔	✔	✔
Locking and unlocking parameters relevant to the measured value	✔	✔	✔
Value acceptance indicated by the green LED	✔	✔	✔
Switching damping on and off	✔	✔	✔

Ordering information:

Product Configurator, "Output, Operation" ordering feature

HART

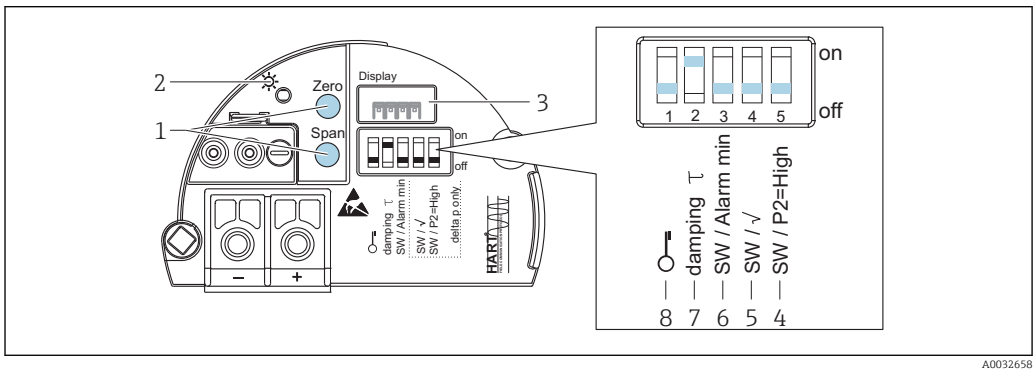

A0032658

1 Operating keys for lower range value (zero) and upper range value (span)
2 Green LED to indicate successful operation
3 Slot for optional local display
4 "SW/P2-High"; used to determine the high-pressure side
5 "SW/Square root"; used to control the output characteristics
6 DIP switch for alarm current SW / Alarm Min (3.6 mA)
7 DIP switch for switching damping on/off
8 DIP switch for locking/unlocking parameters relevant to the measured value

PROFIBUS PA

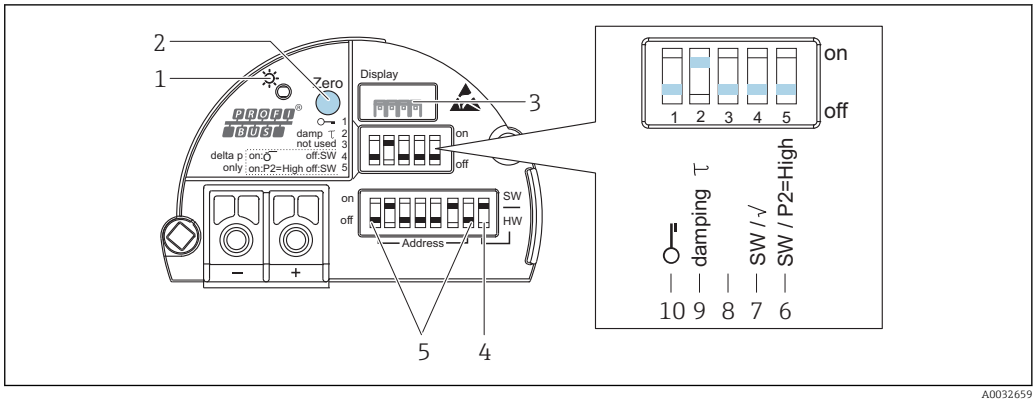

A0032659

1 Green LED to indicate successful operation
2 Operating key for position zero adjustment (Zero) or reset
3 Slot for optional local display
4 DIP-switch for bus address SW / HW
5 DIP-switch for hardware address
6 DIP switch used to determine the high-pressure side
7 DIP switch used to control the output characteristics and measuring mode
8 Not used
9 DIP switch for switching damping on/off
10 DIP switch for locking/unlocking parameters relevant to the measured value

FOUNDATION Fieldbus

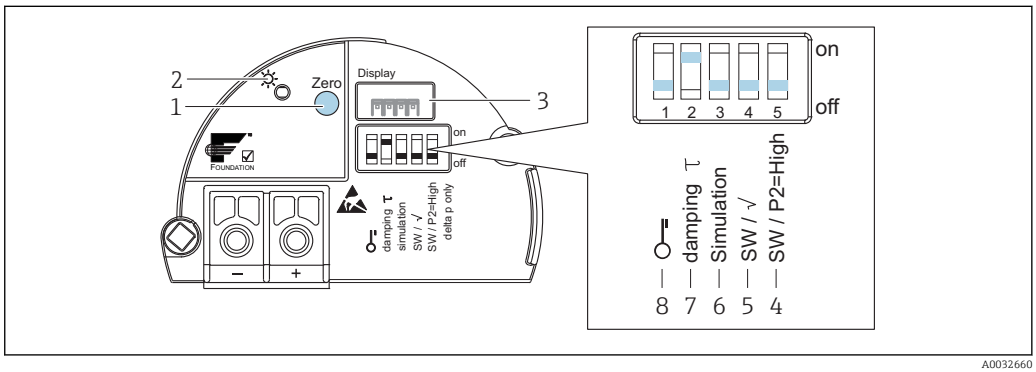

A0032660

1 Operating key for position zero adjustment (Zero) or reset
2 Green LED to indicate successful operation
3 Slot for optional local display
4 DIP switch used to determine the high-pressure side
5 DIP switch used to control the output characteristics and measuring mode
6 DIP-switch for simulation mode
7 DIP switch for switching damping on/off
8 DIP switch for locking/unlocking parameters relevant to the measured value

Operating languages

You can also choose another language in addition to the standard language "English":

Designation	Option [1)]
English	AA
German	AB
French	AC
Spanish	AD
Italian	AE
Dutch	AF

Designation	Option [1]
Chinese	AK
Japanese	AL

1) Product Configurator "Additional Operation Language" ordering feature

Remote operation

All software parameters are accessible depending on the position of the write protection switch on the device.

Hardware and software for remote operation	HART	PROFIBUS PA	FOUNDATION Fieldbus
FieldCare → 🖹 42	✔ [1]	✔ [2]	✔
FieldXpert SFX100 → 🖹 42	✔	–	✔
NI-FBUS Configurator → 🖹 43	–	–	✔
Field Xpert SMT70, SMT77 → 🖹 42	✔	–	✔

1) Commubox FXA195 required
2) Profiboard or Proficard required

FieldCare

FieldCare is an Endress+Hauser asset management tool based on FDT technology. With FieldCare, you can configure all Endress+Hauser devices as well as devices from other manufacturers that support the FDT standard.

FieldCare supports the following functions:
- Configuration of transmitters in offline and online mode
- Loading and saving device data (upload/download)
- Documentation of the measuring point

Connection options:
- HART via Commubox FXA195 and the USB port on a computer
- PROFIBUS PA via segment coupler and PROFIBUS interface card

For further information please contact your local Endress+Hauser sales organization.

Field Xpert SFX100

Field Xpert is an industrial PDA with integrated 3.5" touchscreen from Endress+Hauser based on Windows Mobile. It offers wireless communication via the optional VIATOR Bluetooth modem from Endress+Hauser. Field Xpert also works as a stand-alone device for asset management applications. For details, please refer to BA00060S/04/EN.

Field Xpert SMT70, SMT77

The Field Xpert SMT70 tablet PC for device configuration enables mobile plant asset management in hazardous (Ex Zone 2) and non-hazardous areas. It is suitable for commissioning and maintenance staff. It manages Endress+Hauser and third-party field instruments with a digital communication interface and documents the progress of the work. The SMT70 is designed as a complete solution. It comes with a pre-installed driver library and is an easy-to-use, touch-enabled tool for managing field devices throughout their entire life cycle.

The Field Xpert SMT77 for device configuration enables mobile plant asset management in areas categorized as Ex Zone 1. It is suitable for commissioning and maintenance staff for easy management of field instruments with a digital communication interface. The touch-enabled tablet PC is designed as a complete solution. It comes with comprehensive pre-installed driver libraries and offers users a modern software user interface to manage field instruments throughout the entire life cycle.

Commubox FXA195

For intrinsically safe HART communication with FieldCare via the USB interface. For details refer to TI00404F/00/EN.

Profiboard

For connecting a PC to PROFIBUS.

Proficard

For connecting a laptop to PROFIBUS.

FF configuration program

FF configuration program, such as NI-FBUS Configurator, to
- integrate devices with a "FOUNDATION Fieldbus signal" into an FF network
- set FF-specific parameters

Remote operation via NI-FBUS Configurator:

The NI-FBUS Configurator is an easy-to-use graphical environment for creating linkages, loops, and a schedule based on the FOUNDATION Fieldbus concept.

You can use the NI-FBUS Configurator to configure a fieldbus network as follows:
- Set block and device tags
- Set device addresses
- Create and edit function block control strategies (function block applications)
- Configure vendor-defined function and transducer blocks
- Create and edit schedules
- Read and write data from control and regulation systems
- Invoke methods specified in the manufacturer-specific DD (e.g. basic device settings)
- Display DD menus (e.g. tab for calibration data)
- Download a configuration
- Verify a configuration and compare it to a saved configuration
- Monitor a downloaded configuration
- Replace a virtual device with a real device
- Save and print a configuration

System integration

The device can be given a tag name (max. 8 alphanumeric characters).

Designation	Option [1]
Measuring point (TAG), see additional spec.	Z1
Bus address, see additional spec.	Z2

1) Product Configurator, "Identification" ordering feature

Certificates and approvals

CE mark

The device meets the legal requirements of the relevant EC directives. Endress+Hauser confirms that the device has been successfully tested by applying the CE mark.

RoHS

The measuring system complies with the substance restrictions of the Restriction on Hazardous Substances Directive 2011/65/EU (RoHS 2).

RCM marking

The supplied product or measuring system meets the ACMA (Australian Communications and Media Authority) requirements for network integrity, interoperability, performance characteristics as well as health and safety regulations. Here, especially the regulatory arrangements for electromagnetic compatibility are met. The products bear the RCM marking on the nameplate.



A0029561

Ex approvals

- ATEX
- IECEx
- FM
- CSA
- NEPSI
- Combinations of different approvals also

All explosion protection data are given in separate documentation which is available upon request. The Ex documentation is supplied as standard with all Ex devices .

EAC conformity

The measuring system meets the legal requirements of the applicable EAC guidelines. These are listed in the corresponding EAC Declaration of Conformity together with the standards applied.

The manufacturer confirms successful testing of the device by affixing to it the EAC mark.

Suitable for hygiene applications

For information on installation and approvals, see documentation SD02503F "Hygiene approvals".

For information on 3-A and EHEDG-tested adapters, see documentation TI00426F "Weld-in adapter, process adapter and flanges".

Certificate of current Good Manufacturing Practices (cGMP)

Product Configurator, order code for "Test, Certificate" option "JG"

- The certificate is only available in English
- Materials of construction of product wetted parts
- TSE compliance
- Polishing and surface finish
- Material/ compound compliance table (USP Class VI, FDA conformity)

Functional safety SIL

The Deltabar M with 4 to 20 mA output signal has been developed to assessed and certified by TÜV NORD CERT as per IEC 61508 Edition 2.0 and IEC 61511. These devices can be used to monitor the process level and pressure up to SIL 2. For a detailed description of the safety functions with Deltabar M, settings and functional safety data, see the "Functional safety manual - Deltabar M" SD00347P.

Ordering information:

Product Configurator, "Additional approval" ordering feature, option "LA"

Other standards and guidelines

The applicable European guidelines and standards can be found in the relevant EU Declarations of Conformity. The following standards were also applied:

IEC 62828-1 and IEC 62828-2:

Transmitters for use in industrial-process control systems. Part 1: Methods for performance evaluation

DIN 16086:

Electrical pressure measuring instruments, pressure sensors, pressure transmitters, pressure measuring instruments, concepts, specifications in data sheets

EN 61326 series:

EMC product family standard for electrical equipment for measurement, control, regulation and laboratory procedures.

EN 60529:

Degrees of protection provided by enclosures (IP code)

AD2000

The pressure retaining material 316L (1.4435/1.4404) corresponds to AD2000 - W2/W10.

Pressure Equipment Directive 2014/68/EU (PED)

Pressure equipment with allowable pressure ≤ 200 bar (2 900 psi)

Pressure equipment (with a maximum allowable pressure PS ≤ 200 bar (2 900 psi)) can be classified as pressure accessories in accordance with Pressure Equipment Directive 2014/68/EU. If the maximum allowable pressure is ≤ 200 bar (2 900 psi) and the pressurized volume of the pressure equipment is ≤ 0.1 l, the pressure equipment is subject to the Pressure Equipment Directive (cf. Pressure Equipment Directive 2014/68/EU, Article 4, point 3). The Pressure Equipment Directive only requires that the pressure equipment shall be designed and manufactured in accordance with the "sound engineering practice of a Member State".

Reasons:

- Pressure Equipment Directive (PED) 2014/68/EU Article 4, point 3
- Pressure equipment directive 2014/68/EU, Commission´s Working Group "Pressure", Guideline A-05 + A-06

Note:

A partial examination shall be performed for pressure instruments that are part of safety equipment for the protection of a pipe or vessel from exceeding allowable limits (safety accessory in accordance with Pressure Equipment Directive 2014/68/EU, Article 2, point 4).

Manufacturer declaration

Depending on the desired configuration, the following documents can be ordered additionally with the device:

- TSE-free, materials free from animal origin
- Regulation (EC) No. 2023/2006 (GMP)
- Regulation (EC) No. 1935/2004 on materials and articles intended to come into contact with food

Downloading the Declaration of Conformity

www.endress.com → Download

Drinking water approval

NSF 61

Ordering information:

Product Configurator, "Additional approval" ordering feature, option "LR"

Classification of process sealing between electrical systems and (flammable or combustible) process fluids in accordance with ANSI/ ISA 12.27.01

Endress+Hauser instruments are designed according to ANSI/ISA 12.27.01 either as single seal or dual seal devices with annunciation, allowing the user to waive the use and save the cost of installing external secondary process seals in the conduit as required by the process sealing sections of ANSI/ NFPA 70 (NEC) and CSA 22.1 (CEC). These instruments comply with the North-American installation practice and provide a very safe and cost-saving installation for pressurized applications with hazardous fluids.

Further information can be found in the control drawings of the relevant devices.

Inspection certificate

Designation	Option [1]
EN10204-3.1 material wetted parts, inspection certificate	JA [2]
NACE MR0175 wetted parts	JB [2]
EN10204-3.1 AD2000 material wetted parts, expecting process membrane, inspection certificate	JF

Designation	Option [1]
EN10204-3.1 Helium leak test, inspection certificate	KD
EN10204-3.1 pressure test, inspection certificate	KE

1) Product Configurator "Test, Certificate" ordering feature
2) The selection of this feature for coated process isolating diaphragm / process connections refers to the metallic base material.

Calibration; unit

Designation	Option [1]
Nominal value; mbar/bar	B
Nominal value; kPa/MPa	C
Nominal value; mm/mH2O	D
Nominal value; inH2O/ftH2O	E
Nominal value; psi	F
Customized pressure; see additional specification	J
Customized level; see additional spec.	K
Customized flow; see additional spec.	L

1) Product Configurator, "Calibration; unit" ordering feature

Calibration

Designation	Option [1]
Factory calib. certificate 5-point	F1
DKD/DAkkS calib. certificate 10-point [2]	F2

1) Product Configurator "Calibration" ordering feature
2)

Service

Designation	Option [1]
Cleaned from oil+grease [2]	HA
Cleaned for oxygen service [2]	HB
Cleaned from PWIS (PWIS = paint wetting impairment substances) [2]	HC
Adjusted min alarm current	IA
Adjusted HART Burst Mode PV	IB

1) Product Configurator "Service" ordering feature
2) Only device, not accessory or enclosed accessory

Ordering information

Detailed ordering information is available as follows:
- In the Product Configurator on the Endress+Hauser website:www.endress.com → Click "Corporate" → Select your country → Click "Products" → Select the product using the filters and search field → Open product page → The "Configure" button to the right of the product image opens the Product Configurator.
- From your Endress+Hauser Sales Center:www.addresses.endress.com

Product Configurator - the tool for individual product configuration
- Up-to-the-minute configuration data
- Depending on the device: direct input of information specific to the measuring point, such as measuring range or operating language
- Automatic verification of exclusion criteria
- Automatic generation of the order code with its breakdown in PDF or Excel output format
- Ability to order directly in the Endress+Hauser Online Shop

Special device versions

Endress+Hauser offers special device versions as **T**echnical **S**pecial **P**roducts (TSP).

For further information please contact your local Endress+Hauser Sales Center.

Scope of delivery

- Device
- Optional accessories
- Brief Operating Instruction
- Calibration certificates
- Optional certificates

Measuring point (TAG)

Order code for	895: Marking
Option	Z1: Tagging (TAG), see additional spec.
Location of measuring point identification	To be selected in the additional specification: ▪ Tie-on label, stainless steel ▪ Adhesive paper label ▪ Label provided ▪ RFID TAG ▪ RFID TAG + tie-on label, stainless steel ▪ RFID TAG + adhesive paper label ▪ RFID TAG + label provided
Definition of measuring point identification	To be specified in additional specification: 3 lines each with a maximum of 18 characters The measuring point designation appears on the selected label and/or the RFID TAG.
Identification on electronic nameplate (ENP)	32 characters
Identification on display module	10 characters

Configuration datasheet

Pressure

If the option "J" was selected for the order code for "Calibration; Unit" in the Product Configurator, the following configuration data sheet must be completed and included with the order.

Pressure unit

❑ mbar	❑ mmH_2O	❑ mmHg	❑ Pa
❑ bar	❑ mH_2O	❑ kgf/cm^2	❑ kPa
❑ psi	❑ ftH_2O		❑ MPa
	❑ inH_2O		

Calibration Range / Output

Low range value (LRV):	_____	[Pressure engineering unit]
Upper range value (URV):	_____	[Pressure engineering unit]

Display

1st Value Display [1]	2nd Value Display [1]
❑ Main Value	❑ None (Default)
	❑ Main Value [%]
	❑ Pressure
	❑ Current [mA] (HART only)
	❑ Temperature

1) Depending on sensor and communication version

Damping

Damping: _____ sec (Default 2 sec)

Lowest calibratable span (preset at factory) → 🖹 10

Level

If the option "K" was selected for the order code for "Calibration; Unit" in the Product Configurator, the following configuration data sheet must be completed and included with the order.

Pressure unit

❑ mbar ❑ bar ❑ psi
❑ mmH_2O ❑ mH_2O ❑ ftH_2O ❑ inH_2O
❑ mmHg ❑ kgf/cm^2
❑ Pa ❑ kPa ❑ MPa

Output unit (scaled unit)

Mass	Lengths	Volume	Volume	Percent
❑ kg	❑ m	❑ l	❑ gal	❑ %
❑ t	❑ dm	❑ hl	❑ Igal	
❑ lb	❑ cm	❑ m^3		
	❑ mm	❑ ft^3		
	❑ ft	❑ in^3		
	❑ inch			

Empty pressure [a]: Low pressure value (empty) _____ [Pressure engineering unit]

Empty calibration [a]: Low level value (empty) _____ [Scaled unit]

Full pressure [b]: High pressure value (full) _____ [Pressure engineering unit]

Full calibration [b]: High level value (full) _____ [Scaled unit]

Example

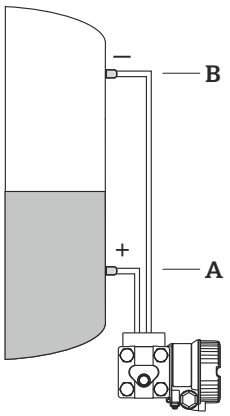

A 50 mbar (1 psi) / 3 m^3/(106 ft^3)
B 500 mbar (7.25 psi) / 100 m^3(3532 ft^3)

Display

1st Value Display [1)]
❑ Main Value

2nd Value Display
❑ None (Default)
❑ Main Value [%]
❑ Pressure
❑ Current [mA] (HART only)
❑ Temperature

1) Depending on sensor and communication version

Damping

Damping: _____ sec (Default 2 sec)

Flow

If the option "G" or the option "J" was selected in the "Calibration; Unit" ordering feature of the Product Configurator, the following configuration data sheet must be completed and included with the order.

Pressure Engineering Unit

❑ mbar	❑ mmH_2O	❑ mmHg	❑ Pa
❑ bar	❑ mH_2O	❑ kgf/cm^2	❑ kPa
❑ psi	❑ ftH_2O		❑ MPa
	❑ inH_2O		

Flow Unit / Measured Value (PV)

Mass	Volume Operation Condition	Volume Norm Condition	Volume Standard Condition	Percent
❑ kg/s	❑ m^3/s	❑ Nm^3/s	❑ Sm^3/s	❑ %
❑ kg/min	❑ m^3/min	❑ Nm^3/m	❑ Sm^3/min	
❑ kg/h	❑ m^3/h	❑ in	❑ Sm^3/h	
❑ t/s	❑ l/s	❑ Nm^3/h	❑ Sm^3/d	
❑ t/min	❑ l/min	❑ Nm^3/d	❑ SCFS	
❑ t/h	❑ l/h		❑ SCFM	
❑ oz/s	❑ US Gal/s		❑ SCF3	
❑ oz/min	❑ US Gal/min		❑ SCFD	
❑ lb/s	❑ US Gal/h			
❑ lb/min	❑ ACFS			
❑ lb/h	❑ ACFM			
	❑ ACFH			

Output Characteristic

❑ linear (HART only)
Operation Point

Max Pressure _____ [Pressure engineering unit]

Max Flow _____ [flow unit]

LRV _____ [Pressure engineering unit]

(Lower Range Value (HART only))

❑ square root (HART only)
Operation Point

Max Pressure _____ [Pressure engineering unit]

Max Flow _____ [flow unit]

LRV _____ [flow unit]

(Lower Range Value (HART only))

Low flow cut off

Value: _____ [%] (default = 5%)

Display Information

1st Value Display [1)]

❑ Main Value

2nd Value Display

❑ none (Default)
❑ Main Value [%]
❑ Pressure
❑ Current [mA] (HART only)
❑ Temperature
❑ Totalizer 1
❑ Totalizer 2

1) Depending on sensor and comunication variant

Damping

Damping: _____ sec (Default 2 sec)

Supplementary documentation

For an overview of the scope of the associated Technical Documentation, refer to the following:
- *Device Viewer* (www.endress.com/deviceviewer): Enter the serial number from the nameplate
- *Endress+Hauser Operations App*: Enter the serial number from the nameplate or scan the 2D matrix code (QR code) on the nameplate

Standard documentation

- Technical Information: planning guide
  The document contains all the technical data on the device and provides an overview of the accessories and other products that can be ordered for the device
- Brief Operating Instructions: takes you quickly to the 1st measured value
  The Brief Operating Instructions contain all the essential information from incoming acceptance to initial commissioning
- Operating Instructions: reference manual
  The Operating Instructions contain all the information that is required in the various phases of the life cycle of the device: from product identification, incoming acceptance and storage, to mounting, connection, operation and commissioning through to troubleshooting, maintenance and disposal

Supplementary device-dependent documentation

Additional documents are supplied depending on the device version ordered: Always comply strictly with the instructions in the supplementary documentation. The supplementary documentation is an integral part of the device documentation.

Field of Activities

Pressure measurement, powerful instruments for process pressure, differential pressure, level and flow:

FA00004P/00/EN

Safety instructions

See Download area of the website.

Special Documentation

Document SD01553P

Mechanical accessories for pressure measuring devices

The documentation provides an overview of available manifolds, oval flange adapters, pressure gauge valves, shutoff valves, siphons, condensate pots, cable shortening kits, test adapters, flushing rings, block-and-bleed valves and protective roofs.

Accessories

Manifolds

→ 36

For details see SD01553P/00/EN "Mechanical accessories for pressure measuring devices".

Additional mechanical accessories

Oval flange adapters, pressure gauge valves, shutoff valves, siphons, condensate pots, cable shortening kits, adapter test, flushing rings, block&bleed valves, protective roofs.

For details see SD01553P/00/EN "Mechanical accessories for pressure measuring devices".

Mounting bracket for wall and pipe mounting

→ 27

M12 connector

→ 17

Service-specific accessories

Accessories	Description
DeviceCare SFE100	Configuration tool for HART, PROFIBUS and FOUNDATION Fieldbus field devices Technical Information TI01134S DeviceCare is available for download at www.software-products.endress.com. You need to register in the Endress+Hauser software portal to download the application.
FieldCare SFE500	FDT-based plant asset management tool FieldCare can configure all smart field units in your plant and helps you manage them. By using the status information, FieldCare is also a simple but effective way of checking the status and condition of the field devices. Technical Information TI00028S
Field Xpert SMT70, SMT77	The Field Xpert SMT70 tablet PC for device configuration enables mobile plant asset management in hazardous (Ex Zone 2) and non-hazardous areas. It is suitable for commissioning and maintenance staff. It manages Endress+Hauser and third-party field instruments with a digital communication interface and documents the progress of the work. The SMT70 is designed as a complete solution. It comes with a pre-installed driver library and is an easy-to-use, touch-enabled tool for managing field devices throughout their entire life cycle. The Field Xpert SMT77 for device configuration enables mobile plant asset management in areas categorized as Ex Zone 1. It is suitable for commissioning and maintenance staff for easy management of field instruments with a digital communication interface. The touch-enabled tablet PC is designed as a complete solution. It comes with comprehensive pre-installed driver libraries and offers users a modern software user interface to manage field instruments throughout the entire life cycle.

Registered trademarks

- HART®
  Registered trademark of the FieldComm Group, Austin, USA
- PROFIBUS PA®
  Trademark of the PROFIBUS User Organization, Karlsruhe, Germany
- FOUNDATION™ Fieldbus
  Registered trademark of the FieldComm Group, Austin, USA



www.addresses.endress.com

Endress+Hauser

People for Process Automation