MFH204

Pressure-resistant position sensor for hydraulic cylinders

MFB3002BAPKG/B/AM/500/US

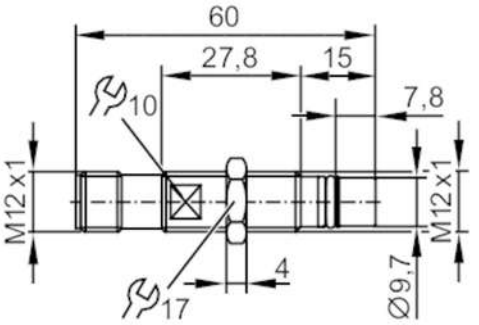

Product characteristics		
Electrical design		PNP
Output function		normally closed
Sensing range	[mm]	1.8
Housing		threaded type
Dimensions	[mm]	M12 x 1 / L = 60
Application		
Special feature		Full-metal housing
Application		hydraulic cylinders
Media		detects ferrous metals
Min. bursting pressure	[bar]	2000
Pressure rating	[bar]	500
Electrical data		
Operating voltage	[V]	10...36 DC
Current consumption	[mA]	< 23
Protection class		III
Reverse polarity protection		yes
Outputs		
Electrical design		PNP
Output function		normally closed
Max. voltage drop switching output DC	[V]	1.6
Max. leakage current	[mA]	0.1
Permanent current rating of switching output DC	[mA]	200
Switching frequency DC	[Hz]	1000
Short-circuit protection		yes
Type of short-circuit protection		pulsed
Overload protection		yes
Detection zone		
Sensing range	[mm]	1.8

MFH204

Pressure-resistant position sensor for hydraulic cylinders

MFB3002BAPKG/B/AM/500/US

Accuracy / deviations			
Hysteresis	[% of Sr]	< 15	
Switch point drift	[% of Sr]	10	
Repeatability	[% of Sr]	10	
Operating conditions			
Pressure peak	[bar]	1000	
Ambient temperature	[°C]	-25...120	
Protection		IP 65; IP 68; IP 69K	
Tests / approvals			
EMC		EN 61000-4-2 ESD	4 kV CD / 8 kV AD
		EN 61000-4-3 HF radiated	10 V/m
		EN 61000-4-4 Burst	2 kV
		EN 61000-4-6 HF conducted	10 V
		EN 55011	class B
		DIN ISO 11452-5	100 V/m
Vibration resistance		EN 60068-2-6 Fc	20 g 50 sweep cycles, 1 octave per minute, in 3 axes / 10...3000 Hz -20...50 °C
Shock resistance		EN 60068-2-27 Ea	100 g 11 ms half-sine; 3 shocks each in every direction of the 3 coordinate axes / -40...85 °C
Continuous shock resistance		EN 60068-2-27 Ea	40 g 6 ms; 4000 shocks each in every direction of the 3 coordinate axes / -20...50 °C
MTTF	[years]	658	
UL approval		UL Approval no.	C005
Mechanical data			
Weight	[g]	31.1	
Housing		threaded type	
Mounting		flush mountable	
Dimensions	[mm]	M12 x 1 / L = 60	
Thread designation		M12 x 1	
Materials		housing: stainless steel; O-ring: FKM; supporting ring: PTFE	
Tightening torque	[Nm]	< 15	
Full-metal housing		yes	
Accessories			
Items supplied		lock nuts: 1	
Remarks			
Pack quantity		1 pcs.	

MFH204

Pressure-resistant position sensor for hydraulic cylinders

MFB3002BAPKG/B/AM/500/US

Electrical connection - plug

Connector: 1 x M12; coding: A; Moulded body: PEI

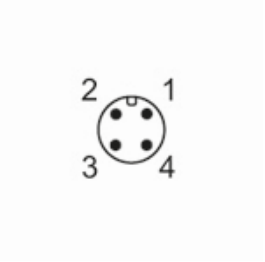

Connection

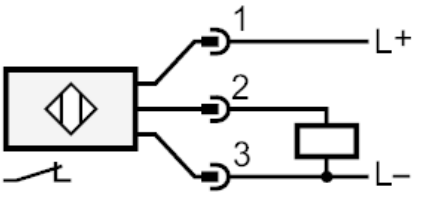

Diagrams and graphs

Installation

