Digital RGBD IP20 Kit - Cables

MC-5500



Mechanical Diagram

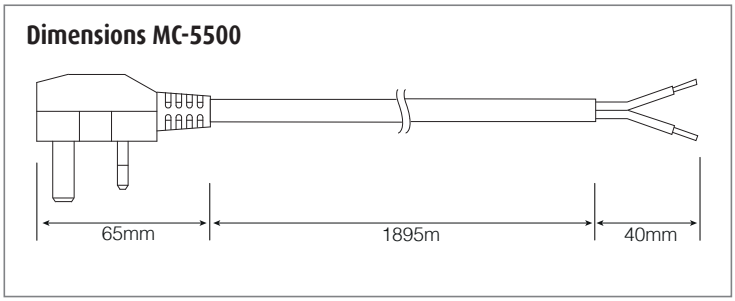

DM-2510



Mechanical Diagram

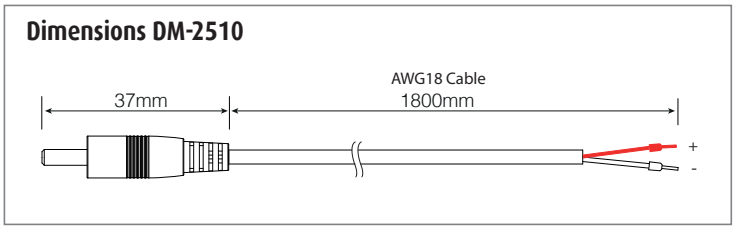

RGBD-POW-CAB

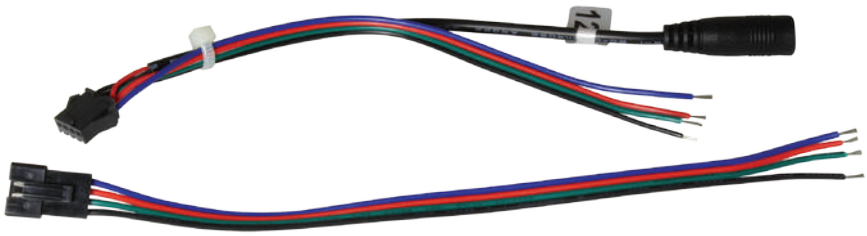

Each 5M LED tape comes with power connection cables.

Where the LED is cut to smaller lengths additional cables can be ordered.

Mechanical Diagram

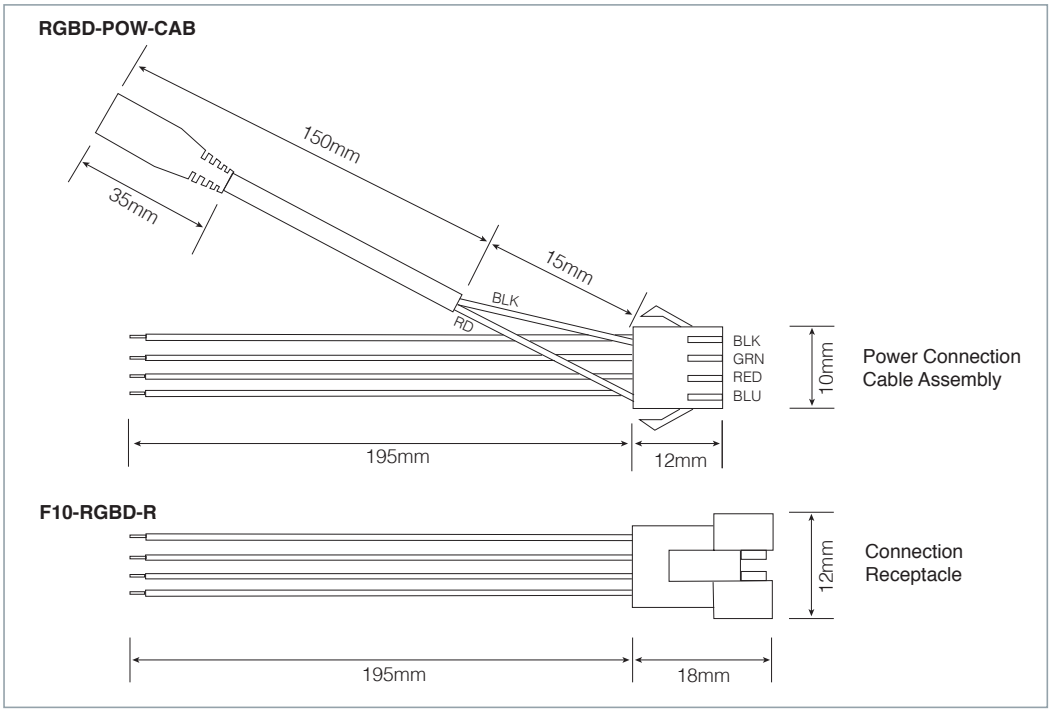

PowerLed (UK) Ltd, Orion House, Calleva Park, Aldermaston, Berkshire RG7 8SN.
Tel: +44 (0)118 970 3856 E-mail: sales@powerled.uk.com Web: www.powerled.uk.com