efectorsoo

PG2457

PG-001-REB12-MFRKG/US/ /P

Pressure sensors

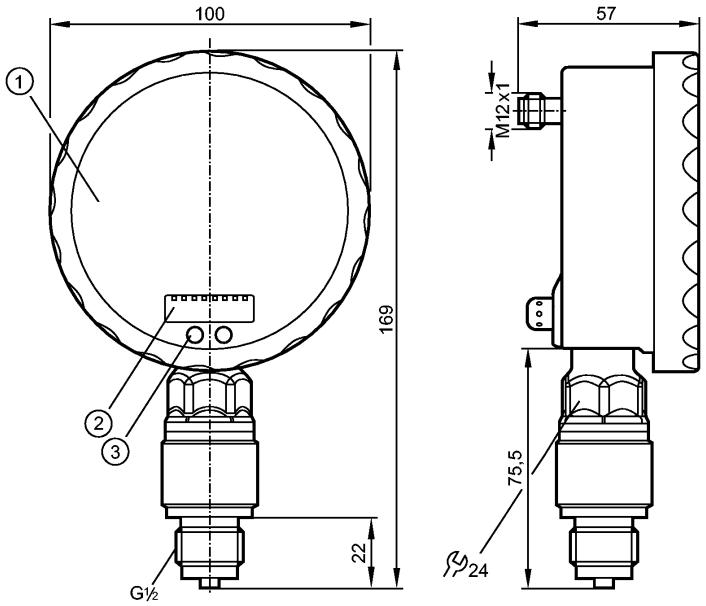

1: Analogue display
2: 4-digit alphanumeric display
3: Touch button (programming button)

Made in Germany

CE cULus LISTED

Product characteristics

Electronic pressure sensor with analogue display
Connector
Analogue display 0...350° rotatable
Resolution 0.25%
Pointer not visible when unit disconnected
Process connection: G ½
2 outputs OUT1 = switching output OUT2 = analogue output
analogue display, 4-digit alphanumeric display
Measuring range: -0.05...1 bar / -0.72...14.5 psi

Application

Application		Type of pressure: relative pressure Liquids and gases	
Pressure rating		10 bar	145 psi
Bursting pressure min.		30 bar	435 psi
Medium temperature	[°C]	-25...80	

Electrical data

Electrical design		DC PNP/NPN
Operating voltage	[V]	18...32 DC
Current consumption	[mA]	70; (24 V)
Insulation resistance	[MΩ]	> 100 (500 V DC)
Protection class		III
Reverse polarity protection		yes

Outputs

efectorsoo

PG2457

PG-001-REB12-MFRKG/US/ /P

Pressure sensors

Output		2 outputs OUT1 = switching output OUT2 = analogue output	
Output function		1 x normally open / closed programmable + 1 x analogue (4...20 / 20...4 mA, scalable)	
Current rating	[mA]	250	
Voltage drop	[V]	< 2	
Short-circuit protection		pulsed	
Overload protection		yes	
Switching frequency	[Hz]	75	
Analogue output		I: 4...20 mA (Ineg: 20...4 mA)	
Max. load	[Ω]	I / Ineg: max. (Ub - 10 V) x 50	
Measuring / setting range			
Measuring range		-0.05...1 bar	-0.72...14.5 psi
Setting range			
Set point, SP		-0.046...1.600 bar	-0.66...23.20 psi
Reset point, rP		-0.050...1.596 bar	-0.72...23.14 psi
Analogue start point, ASP		-0.050...1.340 bar	-0.72...19.58 psi
Analogue end point, AEP		0.200...1.600 bar	2.90...23.20 psi
in steps of		0.002 bar	0.02 psi
Accuracy / deviations			
Accuracy / deviations (in % of the span) Turn down 1:1			
Switch point accuracy		< ± 0.5	
Characteristics deviation *)		< ± 0.25 (BFSL) / < ± 0.5 (LS)	
Hysteresis		< ± 0.25	
Repeatability **)		< ± 0.1	
Long-term stability ***)		< ± 0.1	
Temperature coefficients (TEMPCO) in the temperature range 0...70° C (in % of the span per 10 K)			
Greatest TEMPCO of the zero point		< ± 0.2	
Greatest TEMPCO of the span		< ± 0.2	
Reaction times			
Power-on delay time	[s]	6	
Min. response time switching output	[ms]	9	
Damping for the switching output (dAP)	[s]	0.01...30	
Damping for the analogue output (dAA)	[s]	0.01...30	
Step response time analogue output	[ms]	28	
Integrated watchdog		yes	
Environment			
Ambient temperature	[°C]	-20...80	
Storage temperature	[°C]	-40...100	
Protection		IP 67 / IP 69K	
Tests / approvals			
EMC		EN 61000-4-2 ESD: EN 61000-4-3 HF radiated:	4 kV CD / 8 kV AD 10 V/m

	EN 61000-4-4 Burst: EN 61000-4-5 Surge: EN 61000-4-6 HF conducted:	2 kV 0.5/1 kV 10 V
Shock resistance	DIN IEC 68-2-27:	50 g (11 ms)
Vibration resistance	DIN IEC 68-2-6:	20 g (10...2000 Hz)
MTTF [Years]	103	

Mechanical data

Process connection	G ½
Materials (wetted parts)	ceramics (Al2 O3); FPM; stainless steel 316L / 1.4404
Housing materials	stainless steel 316L / 1.4404; PA; FPM (Viton); PTFE; viewing glass: laminated safety glass 4 mm
Switching cycles min.	100 million
Weight [kg]	0.608

Displays / operating elements

Display	Display unit Switching status Switch points Function display Measured values	2 x LED green LED yellow LED ring 4-digit alphanumeric display analogue display, 4-digit alphanumeric display
Extended display range (max.)	1.6 bar	23.2 psi

Electrical connection

Connection	M12 connector; Gold-plated contacts

Wiring

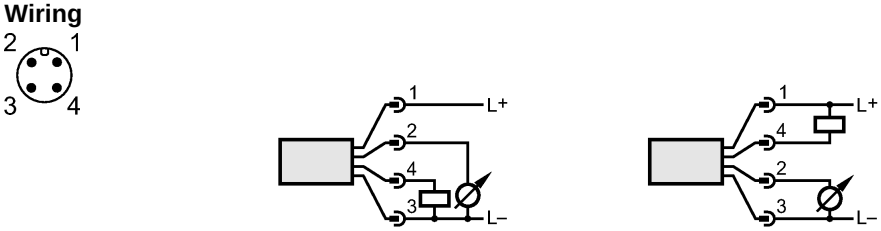

Remarks

Remarks	*) BFSL = Best Fit Straight Line switch point accuracy in the extended display range: 1.5 % of the span **) with temperature fluctuations < 10 K ***) in% of the span / 6 months
Pack quantity [piece]	1