NH Fuse Bases and Accessories

160 - 1600A, 690Vac, Sizes 1 to 4

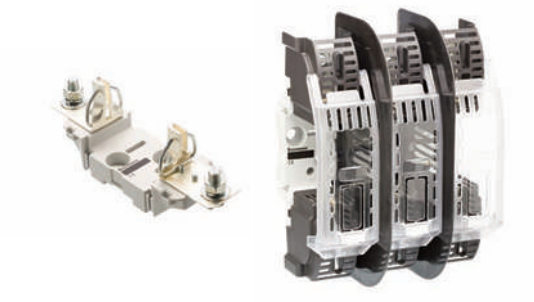

Catalogue Symbol:
SD(size)-D, SD(size)-S: 1-pole
TD(size)-D, TD(size)-DI: 3-pole

Standards/Approvals: IEC 60269-1 and 2, VDE 0636-1 and 2

Description: NH fuse bases with thermoplastic bodies, DIN rail and/or screw mounting (size 4 screw mounting only). Range of accessories including phase barriers, IP20 finger-safe protection kits and neutral links available. Microswitch also available for remote signaling of fuse link operation.

Packaging: 1-pole: 3, SD4 and 3-pole: 1
Packaging 100% recyclable

Technical Data:
Rated Voltage: 690Vac
Rated Current: 160 - 1600A
Rated for Fuse Links with Breaking Capacity: 120kA

Features

- Complies with IEC 60269-1 and 2 fuse system A (NH base), manufacturers type test certificates of compliance available.
- 3-pole integral NH00 base available with reduced width.
- Clip-in phase barriers, terminal shrouds and fuse covers available.
- Vibration tested to IEC 60068-2-6 for marine use

Fuse Base Part Numbers

Size	Poles	Current (Amps)	Part Numbers		Unit Packing	Compatible Fuse Links Size
			DIN Rail and Screw Mounting	Screw Mounting Only		
00	1-pole	160	SD00-D	SD00-S	3	400/500/690V NH gG and aM fuse links
	3-pole	160	TD00-D	N/A	1	
		160	TD00-DI*	N/A	1	
1	1-pole	250	SD1-D	SD1-S	3	
	3-pole	250	TD1-D	N/A	1	
2	1-pole	400	SD2-D	SD2-S	3	
		400	SD2-DD**	N/A	3	
	3-pole	400	TD2-D	N/A	1	
		400	TD2-DD**	N/A	1	
3	1-pole	400	SD3-D**	SD3-S	3	
	3-pole	630	TD3-D**	N/A	1	
4	1-pole	1250	N/A	SD4-S	1	
		1600	N/A	SD4-S1600	1	

* 3-pole integral base moulding.
** Double fuse contact clips.

NH Fuse Bases and Accessories

160 - 1600A, 690Vac, Sizes 1 to 4

Neutral Link Part Numbers

Size	Current (Amps)	Part Number	Unit Packing
NH00	160	SDL-00	3
NH1	250	SDL-1	3
NH2	400	SDL-2	3
NH3	630	SDL-3	3

Technical Data

Fuse Base Part Numbers		SD00-D TD00-D TD00-DI	SD1-D TD1-D	SD2-D TD2-D	SD3-D TD3-D	SD4-S	SD4-S1600
Base		Glass filled PBT					
Contacts		Silver plated copper					
Screw, Nuts and Washers		Zinc clear plated steel					
Derating Temperature Factors For Maximum Current	≤ 35ºC	1	1	1	1	1	1
	40ºC	0.95	0.95	0.95	0.95	0.95	0.95
	50ºC	0.85	0.85	0.85	0.85	0.85	0.85
Maximum Power Acceptance		12W	32W	45W	60W	110W	145W
Degree of Protection with Covers Fitted		IP20	IP20	IP20	IP20	-	-
Terminal Screw		M8	M10	M10	M12	M16	M16
Maximum Tightening Torque Terminal Screw		10N•m	32N•m	32N•m	32N•m	56N•m	56N•m
Fixing	Rail Din	✓	✓	✓	✓	x	x
	Screw	✓	✓	✓	✓	✓	✓
With Microswitch 16A/250V	Presence-Fusion	✓	✓	✓	✓	x	x
Operating Temperature Range		-20 to 70ºC					
Storage Temperature Range		-40 to 80ºC					

NH Fuse Bases and Accessories

160 - 1600A, 690Vac, Sizes 1 to 4

Dimensions (mm) 1-Pole, Size 00

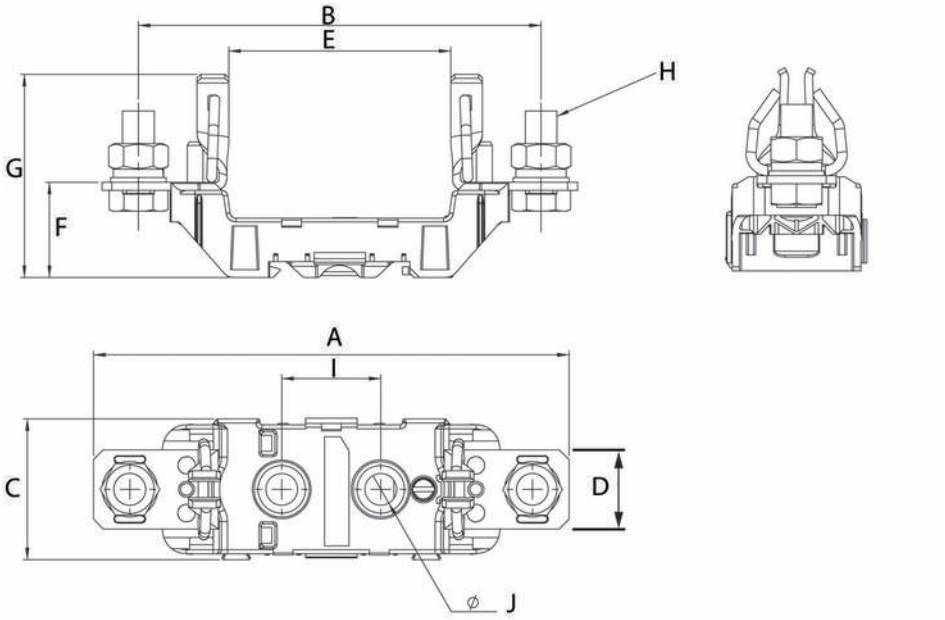

Size	Pole	A	B	C	D	E	F	G	H	I	J
NH00	1-pole	120	102	35.5	20	56	24	51	M8x20	25	8

Dimensions (mm) 1-Pole, Sizes 1, 2 and 3

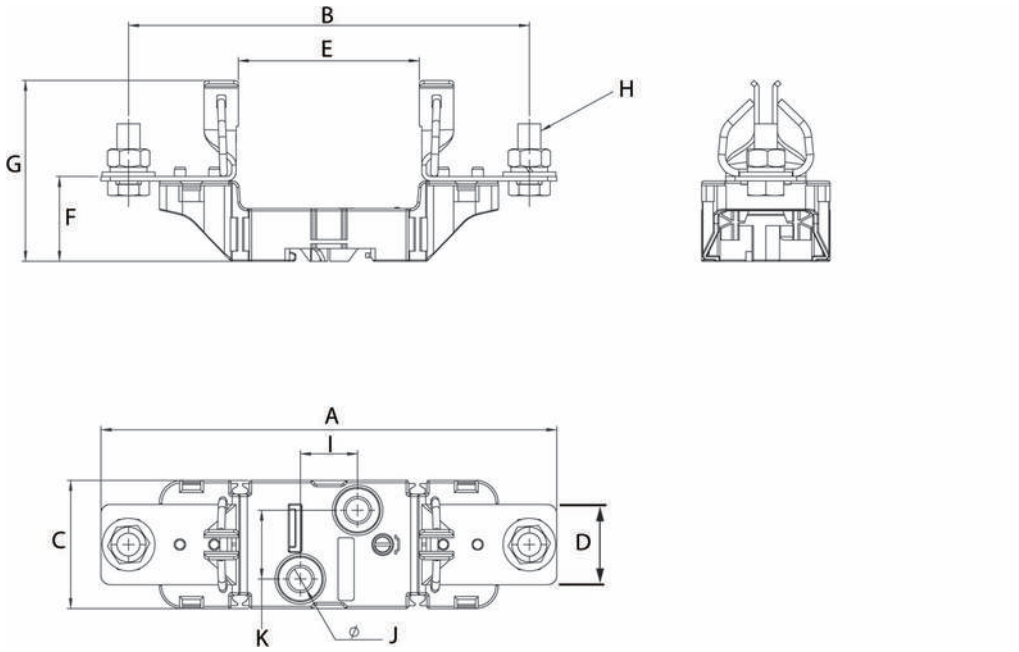

Size	Poles/Type	A	B	C	D	E	F	G	H	I	J	K
NH1	1-pole	199	175	56	35	79	37	78	M10x25	25	10	30
NH2	1 pole	224	199	56	35	79	37.5	86	M10x25	25	10	30
	1-pole double clip	223	199	56	35	82	37	79	M10x25	25	10	30
NH3	1-pole	239	209	56	36	82	37.5	88	M12x30	25	10	30

NH Fuse Bases and Accessories

160 - 1600A, 690Vac, Sizes 1 to 4

Dimensions (mm) 1-Pole, Size 4

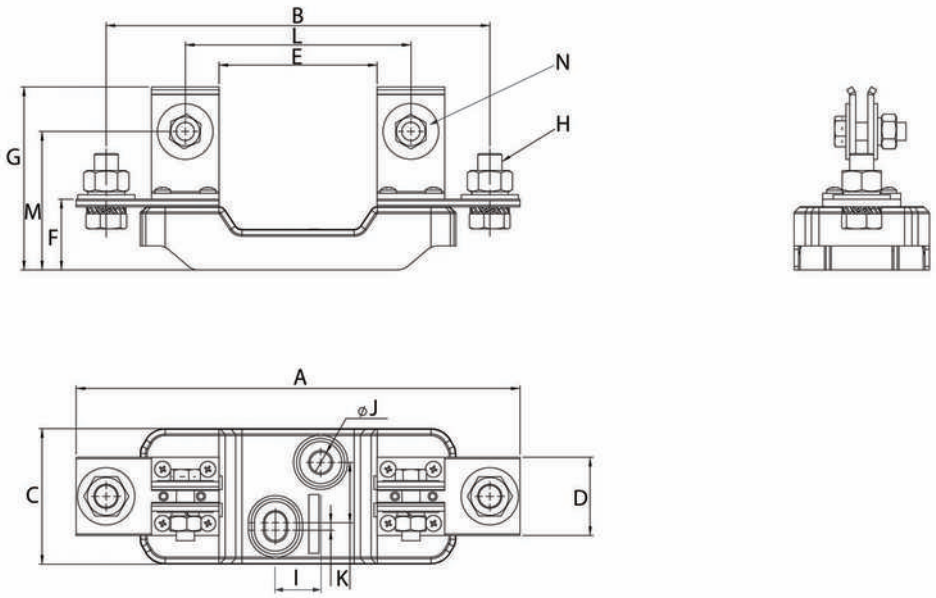

Size	Poles/Type	A	B	C	D	E	F	G	H	I	J	K	L	M	N
NH4	1-pole 1250A	295	255	90	52	105	47	122	M16x40	30	14	40	150	92	M12x40
	1-pole 1600A	295	255	90	60	105	50	125	M16x40	30	14	40	150	92	M12x40

NH Fuse Bases and Accessories

160 - 1600A, 690Vac, Sizes 1 to 4

Dimensions (mm) 3-Pole, Size 00

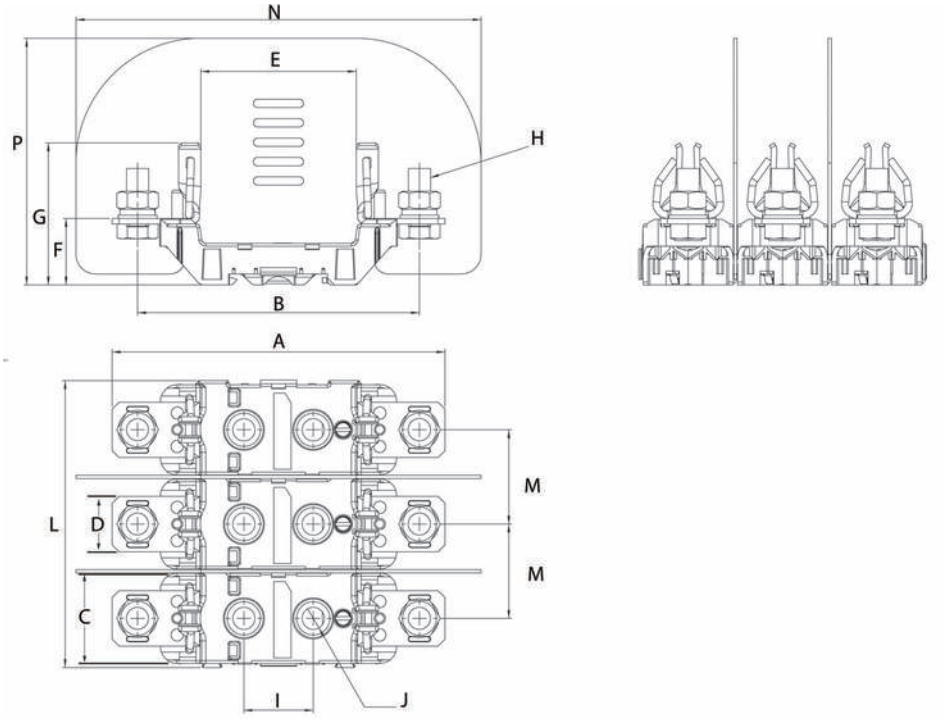

Size	Poles/Type	A	B	C	D	E	F	G	H	I	J	K	L	M	N	P
NH00	3-pole	120	102	35.5	20	56	24	51	M8x20	25	8	-	103.5	34	146	89

Dimensions (mm) Integral 3-Pole, Size 00

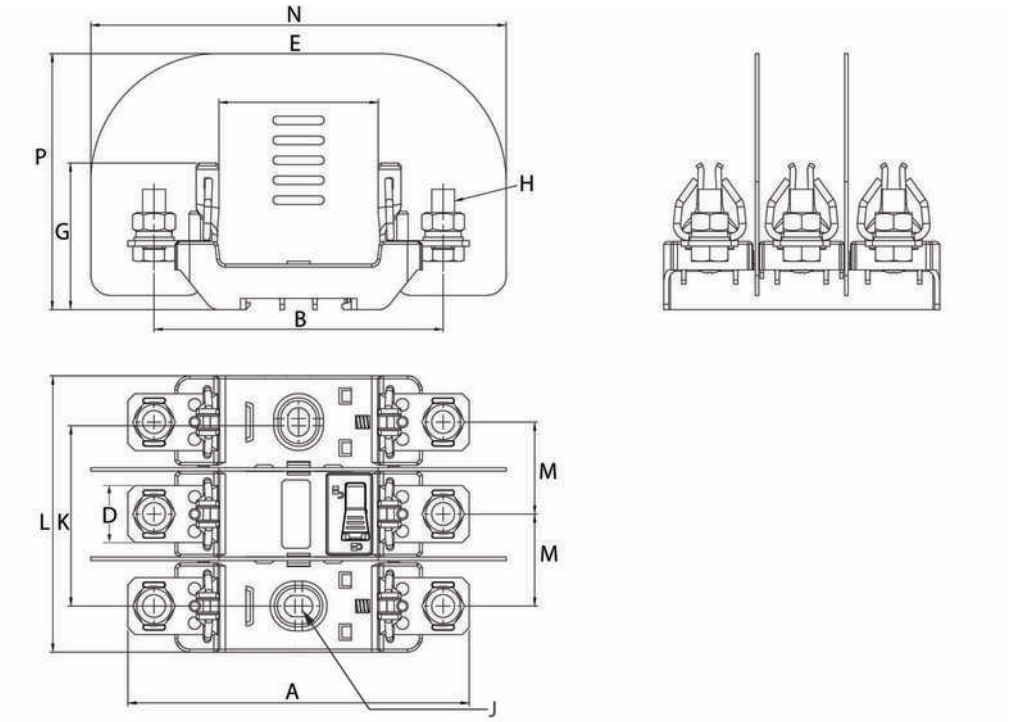

Size	Poles/Type	A	B	C	D	E	F	G	H	I	J	K	L	M	N	P
NH00	3-pole Integral	120	102	-	20	56	24	51	M8x20	-	7.5x10	63.5	97	32.3	146	90

NH Fuse Bases and Accessories

160 - 1600A, 690Vac, Sizes 1 to 4

Dimensions (mm) 3-Pole, Sizes 1, 2 and 3

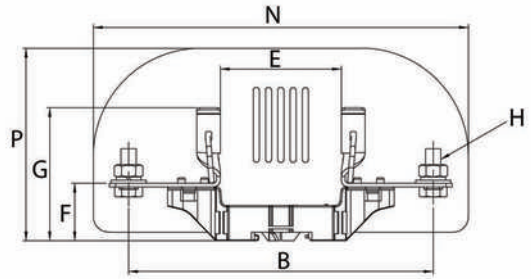

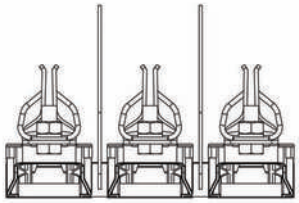

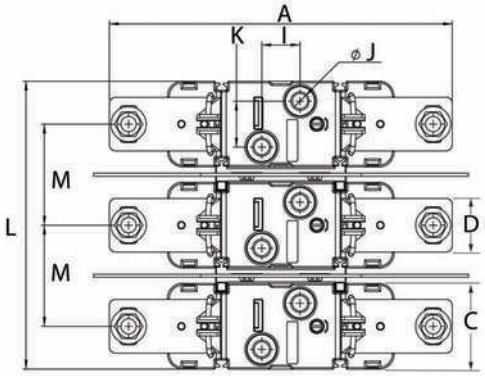

Size	Poles/Type	A	B	C	D	E	F	G	H	I	J	K	L	M	N	P
NH1	3-pole	199	175	56	35	79	37	78	M10x25	25	10	30	188	66	245	125.5
NH2	3-pole	224	199	56	35	79	37.5	86	M10x25	25	10	30	188	66	245	125.5
	3-pole double clip	223	199	56	35	82	37	79	M10x25	25	10	30	188	66	245	125.5
NH3	3-pole	239	209	56	36	82	37.5	88	M12x30	25	10	30	221	82.5	260	137.5

Cross-Reference

Old Part Number	New Part Number
SB00-S	SD00-S
TB00-S	TD00-D
SB00-D	SD00-D
TB00-D	TD00-D
SB0-S	Obsolete, use SD00-S
TB0-S	Obsolete, use TD00-D, TD00-DI
SB0-D	Obsolete, use SD00-D
TB0-D	Obsolete, use TD00-D, TD00-DI
SB1-S	SD1-S
TB1-S	TD1-D
SB1-D	SD1-D
TB1-D	TD1-D

Old Part Number	New Part Number
SB2-S	SD2-S
TB2-S	TD2-D
SB2-D	SD2-D / SD2-DD
TB2-D	TD2-D
SB3-S	SD3-S
TB3-S	TD3-D
SB3-D	SD3-D
TB3-D	TD3-D
SB4-S	SD4-S
TB00-D-IP20	Integral baseTD00-DI and TD00-IP20IC
FPK0-3P	Obsolete
FPK1-3P	TD1-IP20
FPK2-3P	TD2-IP20
FPK3-3P	TD3-IP20

NH Fuse Bases and Accessories

160 - 1600A, 690Vac, Sizes 1 to 4

Accessories

Fuse Extraction Handle

Size	Current (Amps)	Part Number	Unit Packing
NH00-3	160 - 630	FEH	1



Protection Accessories

Size	Current (Amps)	Phase Barrier Kit*		Description
		Part Number	Unit Packing	
NH00	160	SD00-PB	1	2-Phase barriers
NH1	250	SD12-PB	1	2-Phase barriers and 2 ganging links
NH2	400	SD12-PB	1	
NH3	630	SD3-PB	1	



Phase barrier



Ganging link

* Kit includes 2-phase barriers and also ganging links where required.

IP Protection Kits

Size	Current (Amps)	Part Number	Description
NH00	160	TD00-IP20	Triple pole protection kit with terminal shrouds, fuse cover and phase barriers
		TD00-IP20I	Integral triple pole protection kit for TD00-DTI and TD00-TI
		TD00-IP20IC	Integral triple pole protection kit with fuse covers for TD00-DTI and TD00-TI
NH1	250	TD1-IP20	Triple pole protection kit with terminal shrouds, fuse cover phase barriers and ganging links
NH2	400	TD2-IP20	Triple pole protection kit with terminal shrouds, fuse cover phase barriers and ganging links
NH3	630	TD3-IP20	Triple pole protection kit with terminal shrouds, fuse cover phase barriers and ganging links

Microswitch

Part Number	Unit Packing
BVL50	1

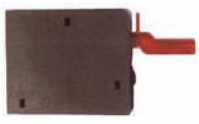

Microswitch suitable for the following NH fuse links:
- 400 Volts gG/gL
- 500 Volts gG/gL and aM
- 690 Volts gG/gL and aM

The only controlled copy of this Data Sheet is the electronic read-only version located on the Cooper Bussmann Network Drive. All other copies of this document are by definition uncontrolled. This bulletin is intended to clearly present comprehensive product data and provide technical information that will help the end user with design applications. Cooper Bussmann reserves the right, without notice, to change design or construction of any products and to discontinue or limit distribution of any products. Cooper Bussmann also reserves the right to change or update, without notice, any technical information contained in this bulletin. Once a product has been selected, it should be tested by the user in all possible applications.