Technical data sheet
Throughbeam photoelectric sensor transmitter
Part no.: 50148358
LS3CL1/X-M8.3



For Illustration purposes only

Contents

- Technical data
- Dimensioned drawings
- Electrical connection
- Diagrams
- Operation and display
- Suitable receivers
- Part number code
- Notes
- Further information
- Accessories

Technical data

Basic data

Series	3C
Operating principle	Throughbeam principle
Device type	Transmitter

Optical data

Operating range	0 ... 5 m (guaranteed operating range)
Operating range limit	0 ... 10 m (typical operating range)
Beam path	Collimated
Light source	Laser, Red
Wavelength	650 nm
Laser class	1, in accordance with IEC 60825-1:2014 (EN 60825-1:2014)
Transmitted-signal shape	Pulsed
Light spot size [at sensor distance]	2.5 mm x 2 mm [1,000 mm]
Type of light spot geometry	elliptic

Electrical data

Protective circuit	Polarity reversal protection
	Short circuit protected

Performance data

Supply voltage U_B	10 ... 30 V, DC, Incl. residual ripple
Residual ripple	0 ... 15 %, From U_B
Open-circuit current	0 ... 20 mA

Time behavior

Readiness delay	300 ms

Connection

Number of connections	1 Piece(s)

Connection 1

Function	Voltage supply
Type of connection	Connector
Thread size	M8
Type	Male
Material	Metal
No. of pins	3 -pin

Mechanical data

Dimension (W x H x L)	11.4 mm x 34.2 mm x 18.3 mm
Housing material	Plastic
Plastic housing	PC-ABS
Lens cover material	Plastic / PMMA
Net weight	10 g
Housing color	Red
Type of fastening	Through-hole mounting
	Via optional mounting device
Recommended tightening torque for M3 fastening	0.9 N·m
Compatibility of materials	ECOLAB

Operation and display

Type of display	LED
Number of LEDs	2 Piece(s)

Environmental data

Ambient temperature, operation	-40 ... 55 °C
Ambient temperature, storage	-40 ... 70 °C

Certifications

Degree of protection	IP 67
	IP 69K
Protection class	III
Approvals	c UL US
Standards applied	IEC 60947-5-2

Classification

Customs tariff number	85365019
ECLASS 5.1.4	27270901
ECLASS 8.0	27270901
ECLASS 9.0	27270901
ECLASS 10.0	27270901
ECLASS 11.0	27270901
ECLASS 12.0	27270901
ECLASS 13.0	27270901
ECLASS 14.0	27270901
ECLASS 15.0	27270901
ETIM 5.0	EC002716
ETIM 6.0	EC002716
ETIM 7.0	EC002716
ETIM 8.0	EC002716
ETIM 9.0	EC002716
ETIM 10.0	EC002716

Dimensioned drawings

All dimensions in millimeters

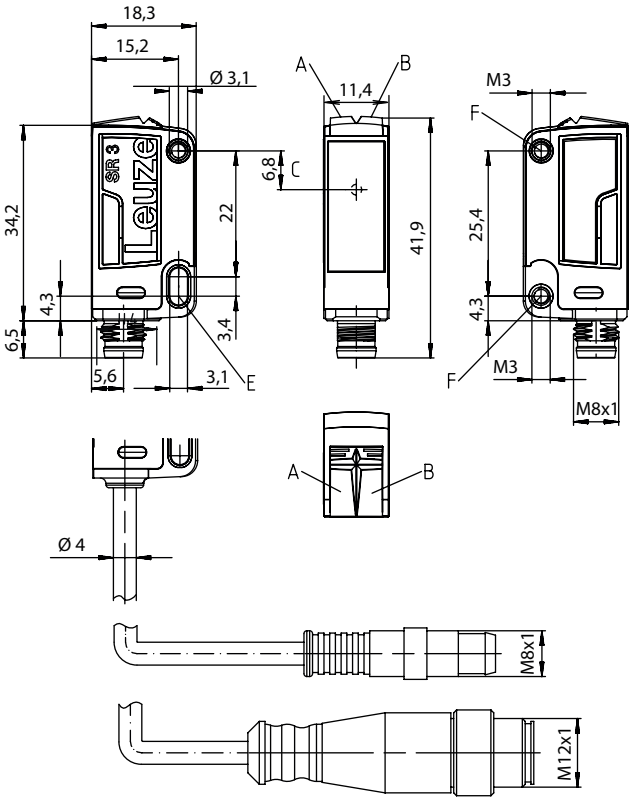

A Green LED
B Yellow LED
C Optical axis
E Mounting sleeve (standard)
F Threaded sleeve (3C.B series)

Electrical connection

Connection 1

Function	Voltage supply
Type of connection	Connector
Thread size	M8
Type	Male
Material	Metal
No. of pins	3 -pin

Pin	Pin assignment
1	V+
3	GND
4	n.c.

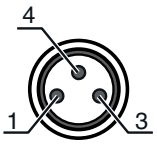

Diagrams

Typ. light spot size

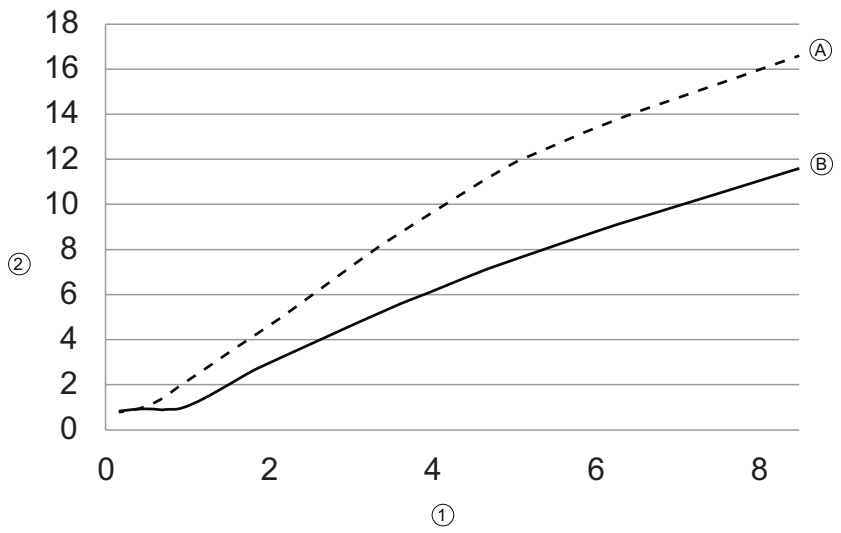

x Distance [m]
y Diameter [mm]

1 Distance [m]
2 Diameter [mm]

A Vertical
B Horizontal

Operation and display

LED	Display	Meaning
1	Green, continuous light	Operational readiness
2	Yellow, continuous light	Transmitted beam active

Suitable receivers

	Part no.	Designation	Operating range Operating range limit	Description
	50148357	LE3CL1.1/G-M8.3	0 ... 5 m 0 ... 10 m	Supply voltage: DC Digital switching outputs: 1 Piece(s) Switching output 1: Transistor, Push-pull, Dark switching (PNP)/light switching (NPN) Switching frequency: 3,000 Hz Connection: Connector, M8, Metal, 3 -pin Operational controls: 270° potentiometer

Part number code

Part designation: **AAA 3C d EE-f.GG H/i J-K**

AAA3C	**Operating principle / construction** HT3C: Diffuse reflection sensor with background suppression LS3C: Throughbeam photoelectric sensor transmitter LE3C: Throughbeam photoelectric sensor receiver PRK3C: Retro-reflective photoelectric sensor with polarization filter ODT3C: Distance diffuse sensor with background suppression
d	**Light type** n/a: red light I: infrared light
EE	**Light source** n/a: LED L1: laser class 1 L2: laser class 2 PP: Power PinPoint® LED
f	**Preset range (optional)** n/a: operating range acc. to data sheet xxxF: Preset range [mm] 2M: operating range of 2 meters
GG	**Equipment** n/a: standard A: Autocollimation principle (single lens) for positioning tasks B: Housing model with two M3 threaded sleeves, brass F: Permanently set range L: Long light spot S: small light spot T: autocollimation principle (single lens) for highly transparent bottles without tracking TT: autocollimation principle (single lens) for highly transparent bottles with tracking V: V-optics XL: Extra long light spot X: extended model HF: Suppression of HF illumination (LED)
H	**Operating range adjustment** n/a with HT: range adjustable via 8-turn potentiometer n/a with retro-reflective photoelectric sensors (PRK): operating range not adjustable 1: 270° potentiometer 3: teach-in via button 6: auto-teach
i	**Switching output/function OUT 1/IN: Pin 4 or black conductor** 2: NPN transistor output, light switching N: NPN transistor output, dark switching 4: PNP transistor output, light switching P: PNP transistor output, dark switching 6: push-pull switching output, PNP light switching, NPN dark switching G: Push-pull switching output, PNP dark switching, NPN light switching L: IO-Link interface (SIO mode: PNP light switching, NPN dark switching) 8: activation input (activation with high signal) X: pin not used 1: IO-Link / light switching (NPN) / dark switching (PNP)
J	**Switching output / function OUT 2/IN: pin 2 or white conductor** 2: NPN transistor output, light switching N: NPN transistor output, dark switching 4: PNP transistor output, light switching P: PNP transistor output, dark switching 6: push-pull switching output, PNP light switching, NPN dark switching G: Push-pull switching output, PNP dark switching, NPN light switching W: warning output X: pin not used 8: activation input (activation with high signal) 9: deactivation input (deactivation with high signal) T: teach-in via cable

Part number code

K	**Electrical connection** n/a: cable, standard length 2000 mm, 4-wire 5000: cable, standard length 5000 mm, 4-wire M8: M8 connector, 4-pin (plug) M8.3: M8 connector, 3-pin (plug) 200-M8: cable, length 200 mm with M8 connector, 4-pin, axial (plug) 200-M8.3: cable, length 200 mm with M8 connector, 3-pin, axial (plug) 200-M12: cable, length 200 mm with M12 connector, 4-pin, axial (plug)

Note

- A list with all available device types can be found on the Leuze website at www.leuze.com.

Notes

Observe intended use!

- This product is not a safety sensor and is not intended as personnel protection.
- The product may only be put into operation by competent persons.
- Only use the product in accordance with its intended use.

For UL applications:

- For UL applications, use is only permitted in Class 2 circuits in accordance with the NEC (National Electric Code).
- These proximity switches shall be used with UL Listed Cable assemblies rated 30V, 0.5A min, in the field installation, or equivalent (categories: CYJV/CYJV7 or PVVA/PVVA7)

WARNING! LASER RADIATION – CLASS 1 LASER PRODUCT

The device satisfies the requirements of IEC/EN 60825-1:2014 safety regulations for a product of **laser class 1** and complies with 21 CFR 1040.10 except for conformance with IEC 60825-1 Ed. 3., as described in Laser Notice No. 56, dated May 8, 2019.

- Observe the applicable statutory and local laser protection regulations.
- The device must not be tampered with and must not be changed in any way.
  There are no user-serviceable parts inside the device.
  Repairs must only be performed by Leuze electronic GmbH + Co. KG.

Further information

- Light source: Average life expectancy 50,000 h at an ambient temperature of 25 °C

Accessories

Connection technology - Connection cables

	Part no.	Designation	Article	Description
	50130832	KD U-M8-3A-V1-050	Connection cable	Connection 1: Connector, M8, Axial, Female, 3 -pin Connector, LED: No Connection 2: Open end Shielded: No Cable length: 5.000 mm Sheathing material: PVC
	50130862	KD U-M8-3W-V1-050	Connection cable	Connection 1: Connector, M8, Angled, Female, 3 -pin Connector, LED: No Connection 2: Open end Shielded: No Cable length: 5.000 mm Sheathing material: PVC

Mounting technology - Mounting brackets

	Part no.	Designation	Article	Description
	50060511	BT 3	Mounting device	Design of mounting device: Angle, L-shape Fastening, at system: Through-hole mounting Mounting bracket, at device: Screw type Type of mounting device: Rigid Material: Metal

Mounting technology - Rod mounts

	Part no.	Designation	Article	Description
	50117829	BTP 200M-D12	Mounting system	Design of mounting device: Protection hood Fastening, at system: For 12 mm rod Mounting bracket, at device: Screw type Type of mounting device: Clampable, Adjustable, Turning, 360° Material: Metal
	50117255	BTU 200M-D12	Mounting system	Design of mounting device: Mounting system Fastening, at system: For 12 mm rod, Sheet-metal mounting Mounting bracket, at device: Screw type, Suited for M3 screws Type of mounting device: Clampable, Adjustable, Turning, 360° Material: Metal

Note

↳ A list with all available accessories can be found on the Leuze website in the Download tab of the article detailed page.