E23008

Sound deflector

BEAM DEFLECTOR UI RANGE 3.5M

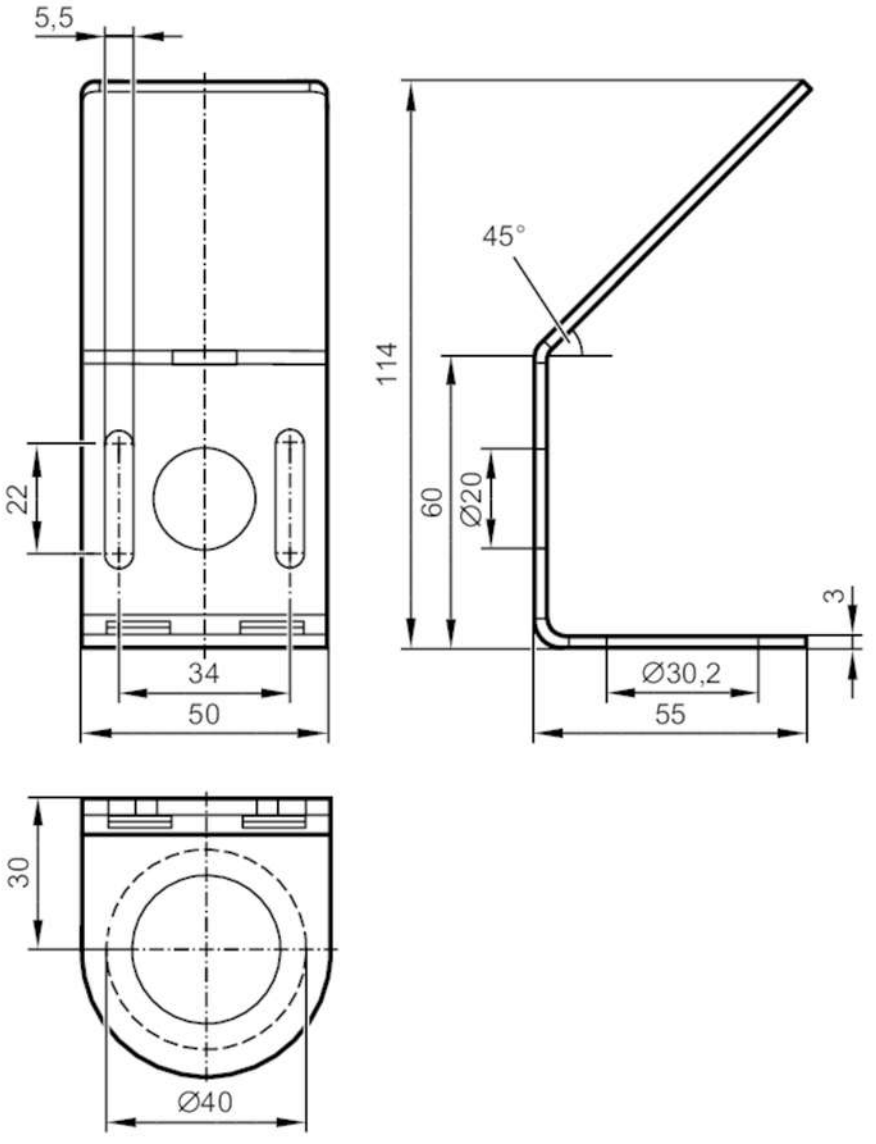

Application		
Design		for all ifm ultrasonic sensors with M30 thread and maximum range of 3.5 m
Mechanical data		
Weight	[g]	173.4
Materials		stainless steel (1.4301 / 304)
Remarks		
Pack quantity		1 pcs.