E11599

Connecting cable with plug

ASTGH050MSA0005C02

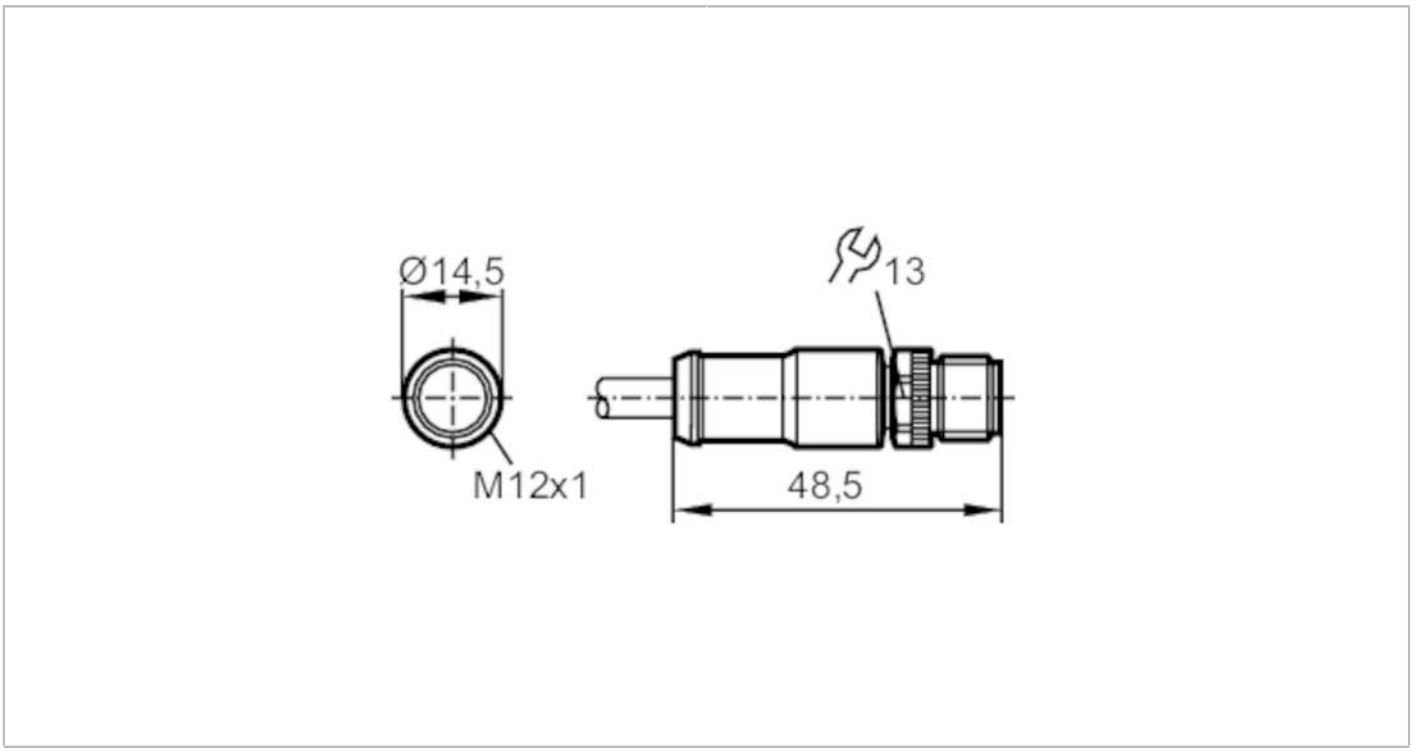

Application			
Special feature		Halogen-free; Gold-plated contacts; Screened cable; Drag chain suitability	
Application		CAN bus	
Electrical data			
Operating voltage	[V]	< 30 AC / < 36 DC	
Max. current load total	[A]	4	
Operating conditions			
Ambient temperature	[°C]	-25...85	
Storage temperature	[°C]	-40...80	
Protection		IP 68	
Mechanical data			
Weight	[g]	350	
Dimensions	[mm]	14.5 x 14.5 x 48.5	
Materials		PUR	
Moulded-body material		PUR	
Material nut		brass, nickel-plated	
Drag chain suitability		yes	
Drag chain suitability		bending radius for flexible use	min. 10 x cable diameter
		bending radius for fixed installation	min. 5 x cable diameter
		travel speed	max. 3.3 m/s for a horizontal travel length of 5 m and max. acceleration of 5 m/s²
		bending cycles	> 1 Mio.
Remarks			
Pack quantity		1 pcs.	

E11599

Connecting cable with plug

ASTGH050MSA0005C02

Electrical connection

Cable: 5 m, PUR, Halogen-free, lilac, Ø 6.8 mm, shielded; 2 x 0.25 mm² (19 x Ø 0.13 mm) + 2 x 0.34 mm² (19 x Ø 0.16 mm) + 1 x 0.34 mm² (19 x Ø 0.16 mm)

Electrical connection - plug

Connector: 1 x M12, straight; coding: A; Moulded body: PUR; Locking: brass, nickel-plated; Contacts: gold-plated; Tightening torque: 0.5 Nm

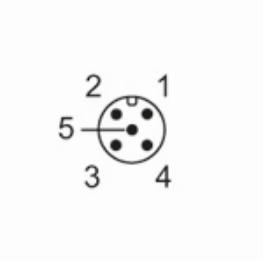

Connection

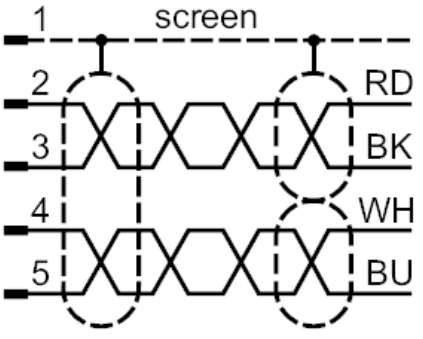

	Core colours :
BK =	black
BU =	blue
RD =	red
WH =	white
screen =	screen