

EAO/SECME 1K2
SLIDE PCB JUMPER SWITCH

- Replace circuit board jumpers, shunts, and interconnects
- Choice of regular or heavy gold-plated contacts
- Standard and high visibility extended slide actuators
- Straight and right angle PCB mounting pins
- Sealed base and washing feet for wave soldering
- Positive actuation and visible indication of slide position
- Over 10,000 operations

Specifications

Contacts:	gold plated, 12 V/500 mA nom, 10 mV/1 mA min, 24 V max
Switch positions:	1-pole, 2-position
Insulation resistance:	>10,000 Mohms, 100 VDC
Terminals:	gold on nickel
Operating life:	10,000 operations
Operating travel:	1.6 mm
Operating temperature:	-40 to 85 degrees C
Sealing:	Straight mounting pin terminals sealed for wave soldering (Right angle mounting pin units cannot be wave soldered)

Description	Mounting	Standard Gold Contacts	Heavy Gold Contacts
Standard red actuator	straight pins	09 03201 02	19 03201 01
	right angle pins	09 10201 02	--
Extended black actuator	straight pins	09 03290 01	--
	right angle pins	09 10290 01	--

Dimensions

Standard actuator slide

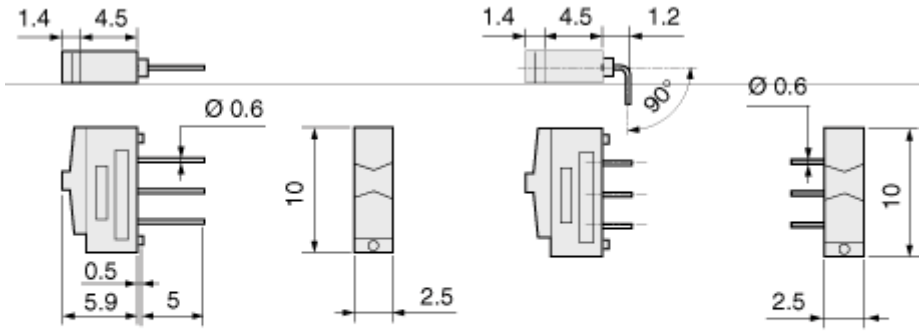

Straight mounting pins

Right angle mounting pins

Extended actuator slide

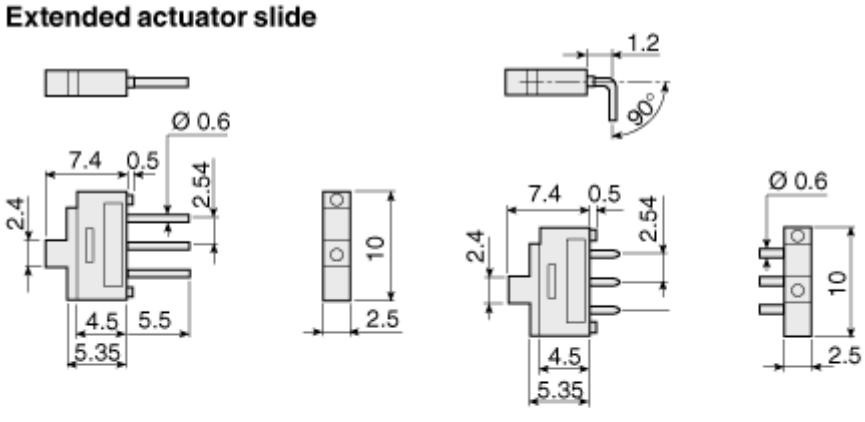

Straight mounting pins

Right angle mounting pins

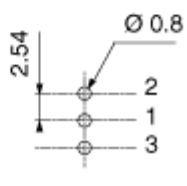

PCB mounting holes
and terminal markings