DATASHEET - M22-PV/KC11/IY



Housing, Controlled stop pushbuttons/emergency-stop buttons, Mushroom-shaped, 38 mm, Non-illuminated, Pull-to-release function, 1 NC, 1 N/O, Screw connection, Red, Yellow

Powering Business Worldwide

Part no.	**M22-PV/KC11/IY**
Catalog No.	**216525**
Alternate Catalog No.	**M22-PV-KC11-IYQ**
EL-Nummer (Norway)	**4355298**

Delivery program

Product range			RMQ-Titan
Basic function			Housing Controlled stop pushbuttons/emergency-stop buttons
Single unit/Complete unit			Complete unit
Design			Mushroom-shaped
Diameter	∅	mm	38
Illumination			Non-illuminated
Approval			DGUV Test ET 16107 Sicherheit geprüft tested safety
			Pull-to-release function
Connection type			Screw connection
Description			Tamper-proof according to ISO 13850/EN 418
Colour			
Mushroom head			Red
			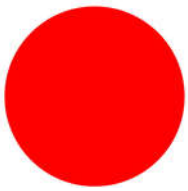
Enclosure covers			Yellow
Degree of Protection			IP66, IP69
Connection to SmartWire-DT			no
Contacts			
N/C = Normally closed			1 NC
N/O = Normally open			1 N/O
Notes			= safety function, by positive opening to IEC/EN 60947-5-1
Actuator travel and actuation force as per DIN EN 60947-5-1, K.5.4.1			
	mm		4.8
Maximum travel	mm		5.7
Minimum force for positive opening	N		20

Contact sequence			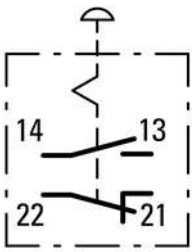
Front dimensions			35

Technical data

General

Standards			IEC/EN 60947 VDE 0660
Lifespan, mechanical	Operations	x 10^6	> 0.1
Operating frequency	Operations/h		≦ 600
Actuating force		n	≦ 50
Climatic proofing			Damp heat, constant, to IEC 60068-2-78 Damp heat, cyclic, to IEC 60068-2-30
Degree of Protection			IP66, IP69
Ambient temperature			
Open		°C	-25 - +70
Mounting position			As required
Mechanical shock resistance		g	50 Shock duration 11 ms Sinusoidal according to IEC 60068-2-27
shipping classification			DNV GL LR
			

Contacts

Rated conditional short-circuit current	I_q	kA	1

Design verification as per IEC/EN 61439

Technical data for design verification			
Rated operational current for specified heat dissipation	I_n	A	6
Heat dissipation per pole, current-dependent	P_{vid}	W	0.11
Equipment heat dissipation, current-dependent	P_{vid}	W	0
Static heat dissipation, non-current-dependent	P_{vs}	W	0
Heat dissipation capacity	P_{diss}	W	0
Operating ambient temperature min.		°C	-25
Operating ambient temperature max.		°C	70
IEC/EN 61439 design verification			
10.2 Strength of materials and parts			
10.2.2 Corrosion resistance			Meets the product standard's requirements.
10.2.3.1 Verification of thermal stability of enclosures			Meets the product standard's requirements.
10.2.3.2 Verification of resistance of insulating materials to normal heat			Meets the product standard's requirements.
10.2.3.3 Verification of resistance of insulating materials to abnormal heat and fire due to internal electric effects			Meets the product standard's requirements.
10.2.4 Resistance to ultra-violet (UV) radiation			Please enquire
10.2.5 Lifting			Does not apply, since the entire switchgear needs to be evaluated.

10.2.6 Mechanical impact		Does not apply, since the entire switchgear needs to be evaluated.
10.2.7 Inscriptions		Meets the product standard's requirements.
10.3 Degree of protection of ASSEMBLIES		Does not apply, since the entire switchgear needs to be evaluated.
10.4 Clearances and creepage distances		Meets the product standard's requirements.
10.5 Protection against electric shock		Does not apply, since the entire switchgear needs to be evaluated.
10.6 Incorporation of switching devices and components		Does not apply, since the entire switchgear needs to be evaluated.
10.7 Internal electrical circuits and connections		Is the panel builder's responsibility.
10.8 Connections for external conductors		Is the panel builder's responsibility.
10.9 Insulation properties		
10.9.2 Power-frequency electric strength		Is the panel builder's responsibility.
10.9.3 Impulse withstand voltage		Is the panel builder's responsibility.
10.9.4 Testing of enclosures made of insulating material		Is the panel builder's responsibility.
10.10 Temperature rise		The panel builder is responsible for the temperature rise calculation. Eaton will provide heat dissipation data for the devices.
10.11 Short-circuit rating		Is the panel builder's responsibility. The specifications for the switchgear must be observed.
10.12 Electromagnetic compatibility		Is the panel builder's responsibility. The specifications for the switchgear must be observed.
10.13 Mechanical function		The device meets the requirements, provided the information in the instruction leaflet (IL) is observed.

Technical data ETIM 7.0

Low-voltage industrial components (EG000017) / Control circuit devices combination in enclosure (EC000225)

Electric engineering, automation, process control engineering / Low-voltage switch technology / Command and alarm device / Command and alarm device combination in housing (ecl@ss10.0.1-27-37-12-16 [AKF034014])

Number of command positions		1
Number of push buttons		1
Number of indicator lights		0
Number of key switches		0
Number of selector switches		0
Number of mushroom-shaped push-buttons		0
Suitable for emergency stop		Yes
Rated control supply voltage Us at AC 50HZ	V	115 - 500
Rated control supply voltage Us at AC 60HZ	V	115 - 500
Rated control supply voltage Us at DC	V	24 - 220
Colour housing cover		Yellow
Material housing		Plastic
Number of contacts as normally open contact		1
Number of contacts as normally closed contact		1
Number of contacts as change-over contact		0
Degree of protection (IP)		IP66
Degree of protection (NEMA)		4X

Approvals

Product Standards		IEC/EN 60947-5; UL 508; CSA-C22.2 No. 14-05; CSA-C22.2 No. 94-91; CE marking
UL File No.		E29184
UL Category Control No.		NKCR
CSA File No.		012528
CSA Class No.		3211-03
North America Certification		UL listed, CSA certified
Degree of Protection		UL/CSA Type 3R, 4X, 12, 13

Dimensions

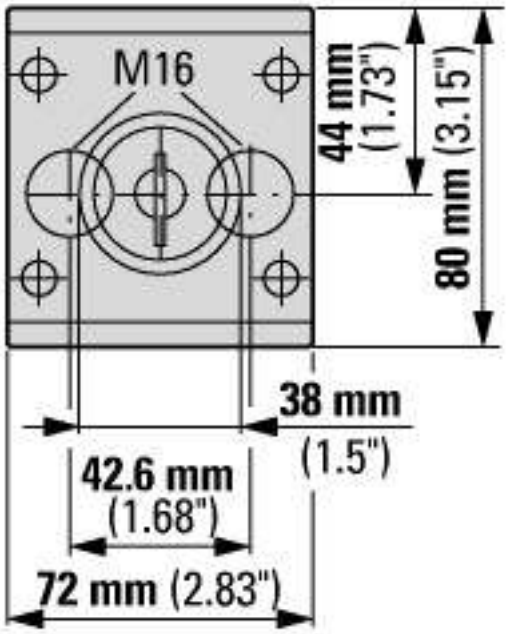
M16
44 mm (1.73")
80 mm (3.15")
38 mm (1.5")
42.6 mm (1.68")
72 mm (2.83")

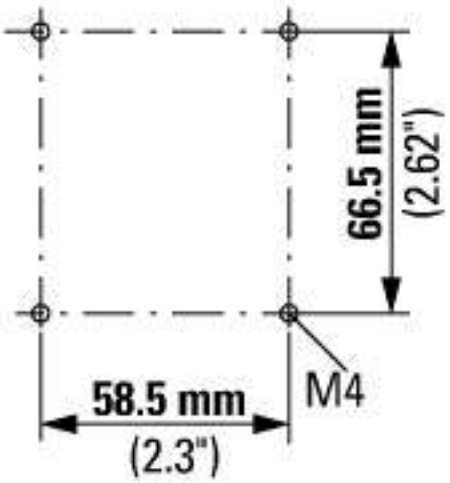
66.5 mm (2.62")
58.5 mm (2.3")
M4

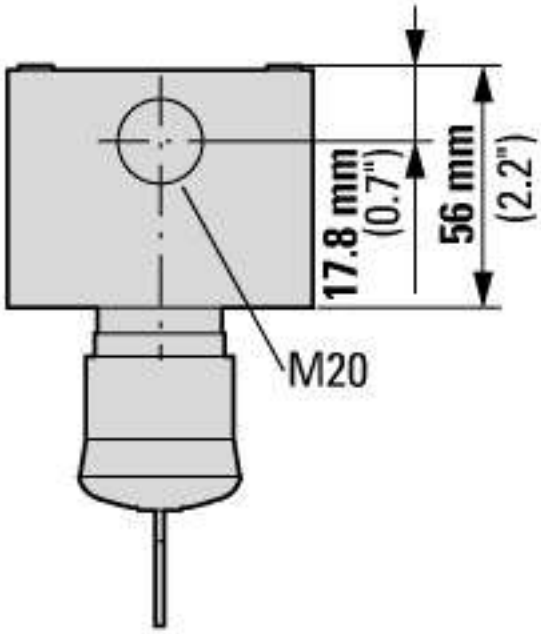
17.8 mm (0.7")
56 mm (2.2")
M20

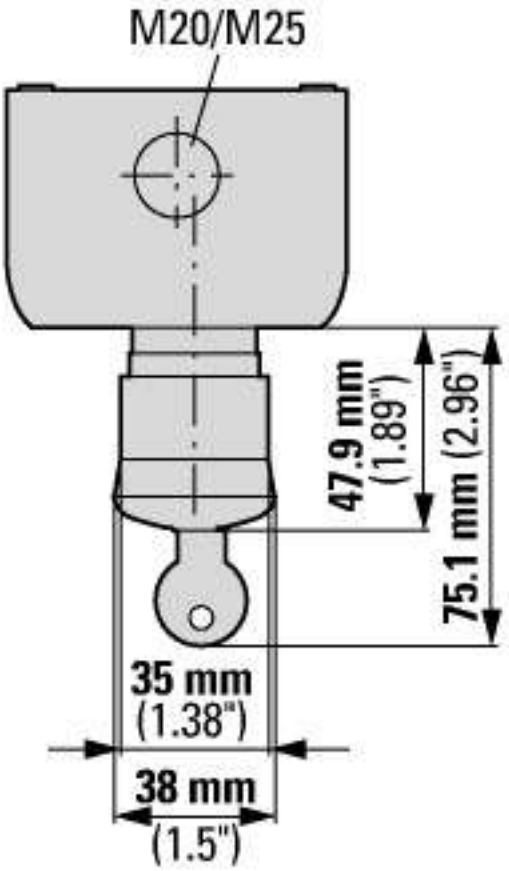
M20/M25
47.9 mm (1.89")
75.1 mm (2.96")
35 mm (1.38")
38 mm (1.5")

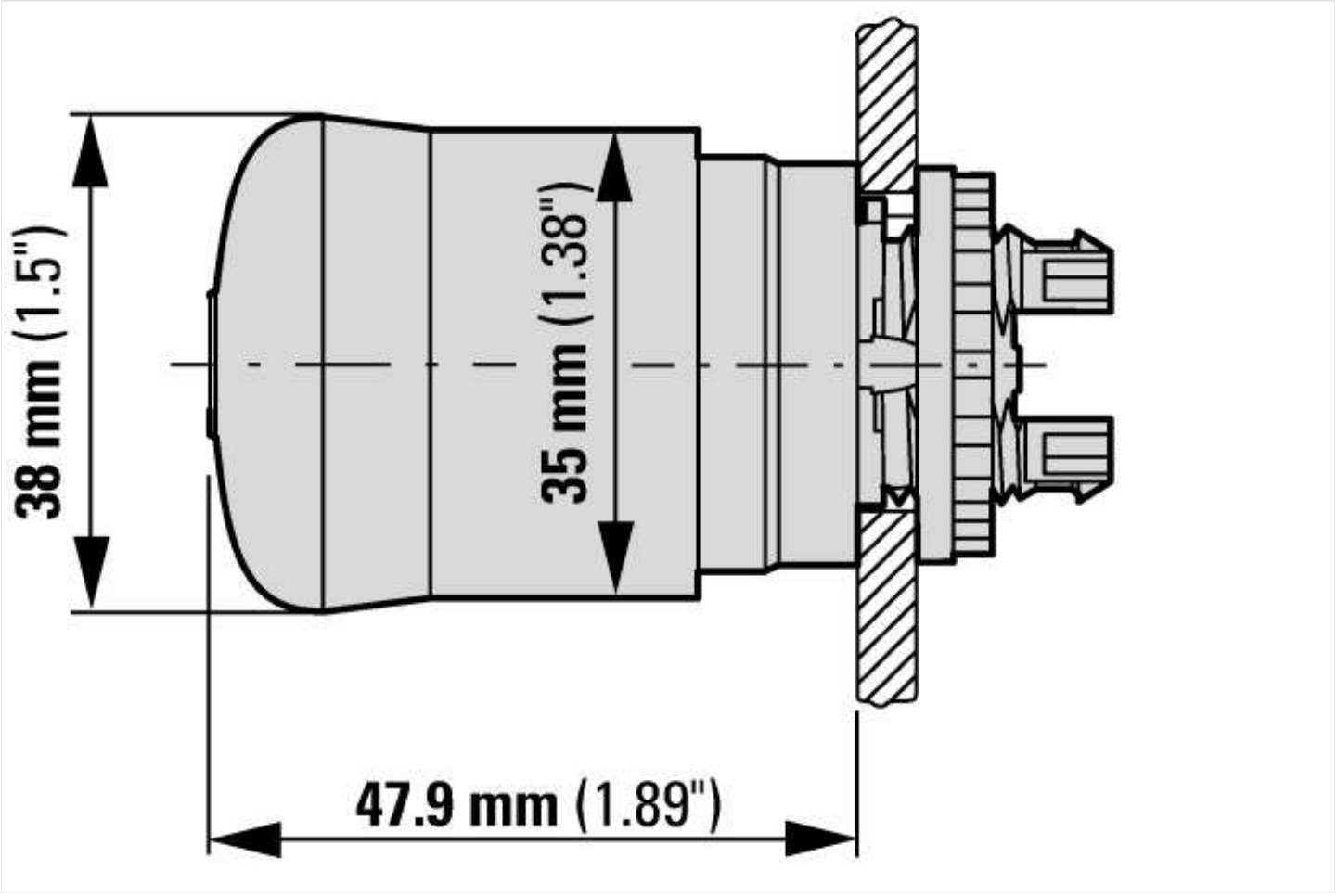

Assets (links)

Declaration of CE Conformity

00003256

Instruction Leaflets

IL04716005Z2018_07

Additional product information (links)

IL04716005 RMQ-Titan: Emergency-stop buttons, emergency-stop buttons	
IL04716005 RMQ-Titan: Emergency-stop buttons, emergency-stop buttons	ftp://ftp.moeller.net/DOCUMENTATION/AWA_INSTRUCTIONS/IL04716005Z2019_05.pdf
IL04716003Z (AWA1160-1746, AWA116-662, IL04716003E) RMQ-Titan system	
IL04716003Z (AWA1160-1746, AWA116-662, IL04716003E) RMQ-Titan system	ftp://ftp.moeller.net/DOCUMENTATION/AWA_INSTRUCTIONS/IL04716003Z2018_06.pdf
DGUV Test Mark Customer Information	http://www.dguv.de/medien/dguv-test-medien/_pdf_zip_doc_ppt/agb-und-pzo/dguv_test_zeichen_infoblatt_kunden.pdf

© 09/2019 by Eaton Industries GmbH