**JUMO GmbH & Co. KG**
Delivery address: Mackenrodtstraße 14,
36039 Fulda, Germany
Postal address: 36035 Fulda, Germany
Phone: +49 661 6003-0
Fax: +49 661 6003-607
E-mail: mail@jumo.net
Internet: www.jumo.net

**JUMO Instrument Co. Ltd.**
JUMO House
Temple Bank, Riverway
Harlow - Essex CM20 2DY, UK
Phone: +44 1279 63 55 33
Fax: +44 1279 63 52 62
E-mail: sales@jumo.co.uk
Internet: www.jumo.co.uk

**JUMO Process Control, Inc.**
8 Technology Boulevard
Canastota, NY 13032, USA
Phone: 315-697-JUMO
1-800-554-JUMO
Fax: 315-697-5867
E-mail: info@jumo.us
Internet: www.jumo.us



# JUMO ecoTRANS Lf 01/02

## Microprocessor Transmitter/Switching Device for Conductivity

**Housing for DIN rail mounting (35 mm × 7.5 mm to EN 60715 A.1)**

## Brief description

The JUMO ecoTRANS Lf 01/02 conductivity transmitter is used to measure the conductivity of liquids in conjunction with electrolytic conductivity sensors.
The instruments are designed for application in general water engineering.

The JUMO ecoTRANS Lf 01 features a freely configurable analog measurement value output. The instrument can, for example, be used as an economically priced universal transmitter.

The JUMO ecoTRANS Lf 02 is equipped with a changeover relay.

And, using the teach-in connector, the JUMO ecoTRANS Lf 02 can also automatically define the switching point of the integrated relay.
Typical areas of application are freshwater monitoring and water treatment, reverse osmosis plant, ion exchanger plant, condensate monitoring, and cooling water checks.

The instrument is programmed via the setup connection (notebook/PC), using the setup program:

- calibration of the cell constant
- calibration of the temperature coefficient
- configuration of the parameters: range, reference temperature, cell constant, temperature, switching point, analog output, and others.




## Block structure

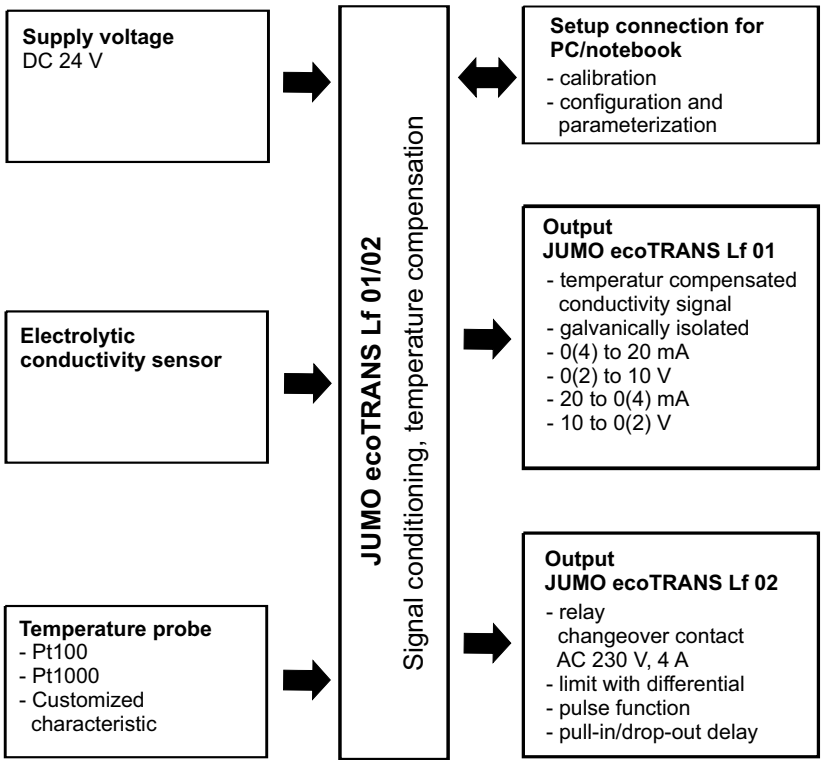


## Key features

- 3-way isolation (voltage supply is galvanically isolated from input and from output)
- DIN rail mounting
- 1 analog output, galvanically isolated from input
  0(4) to 20 mA/0(2) to 10 V
  (Type JUMO ecoTRANS Lf 01)
- 1 relay (Type JUMO ecoTRANS Lf 02)
- Teach-in function (definition of switching point through the teach-in connector) on the JUMO ecoTRANS Lf 02.
- 1 LED, two colors (red/green), for signaling operating states
- Calibration timer
- Customized characteristic for temperature probe can be implemented (e.g. NTC, PTC)
- Reference temperature is settable

**JUMO GmbH & Co. KG**
Delivery address: Mackenrodtstraße 14, 36039 Fulda, Germany
Postal address: 36035 Fulda, Germany
Phone: +49 661 6003-0
Fax: +49 661 6003-607
E-mail: mail@jumo.net
Internet: www.jumo.net

**JUMO Instrument Co. Ltd.**
JUMO House
Temple Bank, Riverway
Harlow - Essex CM20 2DY, UK
Phone: +44 1279 63 55 33
Fax: +44 1279 63 52 62
E-mail: sales@jumo.co.uk
Internet: www.jumo.co.uk

**JUMO Process Control, Inc.**
8 Technology Boulevard
Canastota, NY 13032, USA
Phone: 315-697-JUMO
1-800-554-JUMO
Fax: 315-697-5867
E-mail: info@jumo.us
Internet: www.jumo.us



## Operation

The JUMO ecoTRANS Lf 01 is operated exclusively through the setup program using a PC. The switching point of the JUMO ecoTRANS Lf 02 can be set both through the setup program and the teach-in connector (teach-in function).

## Calibration options

- Calibration of the cell constant

Subject to manufacturing tolerances, the cell constant of a conductivity sensor may deviate slightly from its nominal (printed) value. In addition, the cell constant may change during operation (due to deposits or wear, for example). This results in a change of the output signal from the cell. The JUMO ecoTRANS Lf 01/02 offers the user the possibility of compensating any deviation from the nominal value of the cell constant through **manual entry** (range 20 to 500 %) or **automatic calibration** of the relative cell constant $K_{rel}$.

- Calibration of the temperature coefficient $\alpha$

The conductivity of almost all solutions depends on the temperature. To ensure correct measurement, it is therefore necessary to know both the temperature and temperature coefficient $\alpha$ [% per °C] of the solution. The temperature can either be measured automatically with a temperature probe (Pt100/Pt1000/NTC/PTC) or set manually by the user.
The JUMO ecoTRANS Lf 01/02 can determine the temperature coefficient automatically, or the user can enter it manually within the range 0 to 5.5 % per °C.

## Calibration timer

If required, the integrated calibration timer will draw your attention to an intended calibration (cell constant/temperature coefficient).

## Functions of the JUMO ecoTRANS Lf 01 output

- The instrument features an analog output for presenting the actual conductivity value.
- The response of the measurement output to over/underrange and active measuring circuit monitoring is programmable.

On underrange or overrange, the analog output can, if required, adopt the "Low" or "High" operational state. These operational states can be recognized as “irregular” by a connected PLC.
Depending on the range,
“Low” is: 0 mA/0 V/ ≤ 3.4 mA/≤ 1.4 V.
Depending on the range,
“High” is: 22 mA/10.7 V

- Simulation of the measurement output

The measurement output (0/2 to 10 V or 0/4 to 20 mA, depending on the setting) can be freely selected in the manual mode.
Application: “Dry-run” commissioning of the plant (without measuring cell; fault search; servicing).

## Functions of the JUMO ecoTRANS Lf 02 output

- The instrument has a relay output (changeover contact).
- Limit monitoring with differential. Switching function can be reversed.
  MAX/MIN limit comparator (limit monitor).
- Teach-in function:
  As soon as the teach-in connector is plugged in, the instrument determines the optimum range for the cell constant that was set and defines the switching point for the integrated relay in accordance with the actual measured value.

Limit or pulse functions can be assigned to the relay output of the JUMO ecoTRANS Lf 02.
For each one, the direction of switching (energized on going above, or going below a threshold), pull-in and/or drop-out delay, pulse function and a hysteresis can all be defined.

The response of the relay output to over/underrange and active measuring circuit monitoring is programmable (active or inactive).

# Technical data

## Inputs

**Analog input 1 (conductivity)**
Electrolytic conductivity cells with the cell constants 0.01; 0.1; 1.0; 10.0 $^1/_{cm}$
(2-electrode principle).
The cell constants can be adjusted over a range 20 to 500 %.

**Lead compensation, analog input 1**
With measuring ranges above 20 mS/cm, the effect of long cables can be compensated by entering the lead resistance, within the range 0.00 to 99.99 Ω.

**Zero-point calibration, analog input 1**
Zero-point errors arising from the system can be compensated.

**Analog input 2 (temperature)**
Resistance thermometer Pt100 or Pt 1000, in 2- or 3-wire circuit, -10 to +250 °C.
NTC/PTC as customized characteristic, maximum resistance 4500 Ω

The setup program can be used to enter a customized characteristic for the temperature probe. This means that any temperature probe (NTC or similar) that may already be present can continue to be used.

Measurement display (in setup program) in °C/°F

**Lead compensation, analog input 2**
The lead resistance can be compensated in software in the range 0.00 to 99.99 Ω.

This is not required if the resistance thermometer is connected in a 3-wire circuit.

The offset can be used to correct the measured value within the range -20 to +20 °C.

**Measuring range**
0 to 5 µS to 0 to 200 mS, depending on the cell constant. Intermediate values are programmable.

| Cell constant K | Measuring range |
|---|---|
| 0.01/cm | 0 to 5 µS/cm |
| 0.01/cm | 0 to 20 µS/cm |
| 0.1/cm | 0 to 200 µS/cm |
| 0.1/cm | 0 to 1000 µS/cm |
| 1/cm | 0 to 2 mS/cm |
| 1/cm | 0 to 20 mS/cm |
| 10/cm | 0 to 100 mS/cm |
| 10/cm | 0 to 200 mS/cm |

**Deviation from characteristic, conductivity**
on ranges 0 to 5 µS/cm and 0 to 20 µS/cm:
≤ 1.0 % of range

All other ranges:
≤ 2.0 % of range

**Reference temperature (for temperature compensation)**
settable from 10 to 40 °C
(factory setting: 25 °C)

**Temperature range**
-10 to +250 °C (also in °F)

**Deviation from characteristic, temperature**
with Pt100/Pt1000: ≤ 0.6 % of range
with customized characteristic: ≤ 5 Ω.

## Outputs

**JUMO ecoTRANS Lf 01 (analog output):**
freely configurable:
0(2) to 10 V $R_{load} \geq 2$ kΩ or
10 to (2)0 V $R_{load} \geq 2$ kΩ or
0(4) to 20 mA $R_{load} \leq 400$ Ω or
20 to (4)0 mA $R_{load} \leq 400$ Ω
electrically isolated from the inputs:
ΔU ≤ 30 V AC or
ΔU ≤ 50 V DC
minimum scaling span:
10 % of measuring range span.

**Deviation of the output signal**
±0,015 mA or ±5 mV ±50 ppm/K

**JUMO ecoTRANS Lf 02 (relay output):**

**changeover contact**
contact rating: 4 A, 250 V AC
4 A, 24 V DC with resistive load
contact life:
> 100, 000 operations at rated load

**JUMO GmbH & Co. KG**
Delivery address: Mackenrodtstraße 14, 36039 Fulda, Germany
Postal address: 36035 Fulda, Germany
Phone: +49 661 6003-0
Fax: +49 661 6003-607
E-mail: mail@jumo.net
Internet: www.jumo.net

**JUMO Instrument Co. Ltd.**
JUMO House
Temple Bank, Riverway
Harlow - Essex CM20 2DY, UK
Phone: +44 1279 63 55 33
Fax: +44 1279 63 52 62
E-mail: sales@jumo.co.uk
Internet: www.jumo.co.uk

**JUMO Process Control, Inc.**
8 Technology Boulevard
Canastota, NY 13032, USA
Phone: 315-697-JUMO
1-800-554-JUMO
Fax: 315-697-5867
E-mail: info@jumo.us
Internet: www.jumo.us



## General characteristics

**A/D converter**
resolution 14 bit

**Sampling time**
500 msec = 2 measurements per second

**Ambient temperature drift**
≤ 0.5 % per 10 °C

**Measuring circuit monitoring**
input 1(conductivity):
out-of-range
input 2 (temperature):
out-of-range, probe short-circuit, probe break
In fault condition, the outputs adopt a defined (configurable) state.

**Data backup**
EEPROM

**Supply**
20 to 30 V DC, ripple < 5 %
power consumption ≤ 2 W,
with reverse-polarity protection.
For operation with SELV or PELV circuits.

**Electrical connection**
screw terminals up to 2.5 $mm^2$

**Permissible ambient temperature**
-10 to +60 °C

**Permissible storage temperature**
-20 to +75 °C

**Climatic conditions**
rel. humidity ≤ 93 %, no condensation

**Enclosure protection** (to EN 60529)
IP20

**Electrical safety**
to EN 61010
clearance and creepage distances for
- overvoltage category II
- pollution degree 2

**Electromagnetic compatibility**
to EN 61326
interference immunity:
to industrial requirements
interference emission:
Class B

**Housing**
housing for DIN rail mounting: PC (polycarbonate)

**Mounting**
on 35 mm × 7.5 mm DIN rail to EN 50022

**Operating position**
unrestricted

**Weight**
approx. 110 g

# Operation via the setup interface

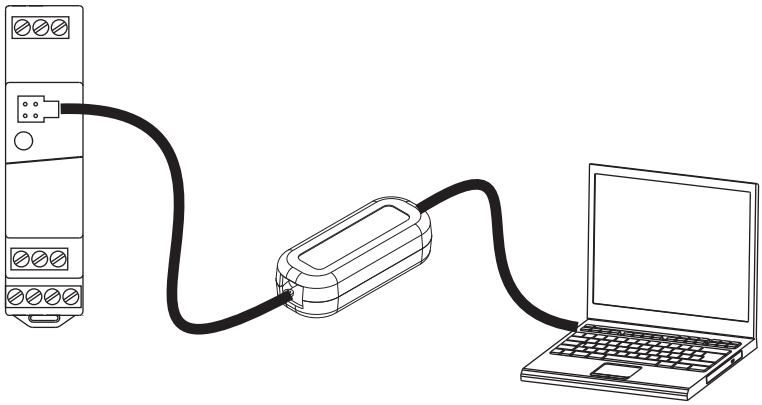

# Dimensions

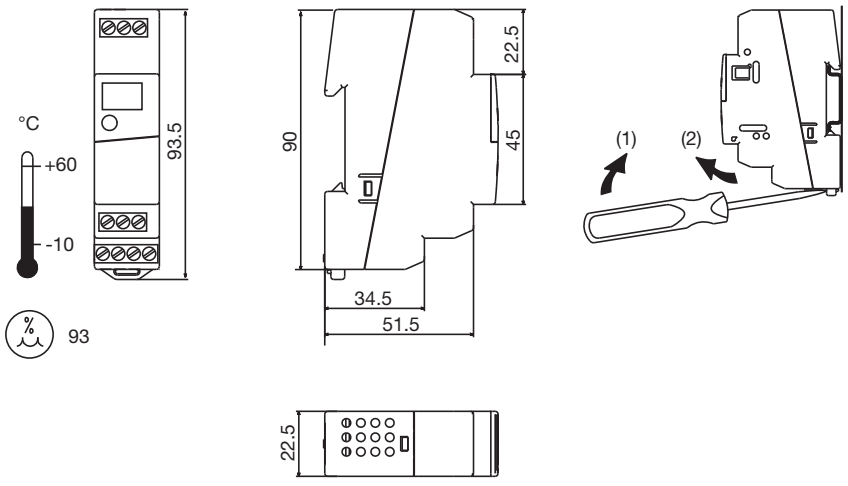

**JUMO GmbH & Co. KG**
Delivery address: Mackenrodtstraße 14,
36039 Fulda, Germany
Postal address: 36035 Fulda, Germany
Phone: +49 661 6003-0
Fax: +49 661 6003-607
E-mail: mail@jumo.net
Internet: www.jumo.net

**JUMO Instrument Co. Ltd.**
JUMO House
Temple Bank, Riverway
Harlow - Essex CM20 2DY, UK
Phone: +44 1279 63 55 33
Fax: +44 1279 63 52 62
E-mail: sales@jumo.co.uk
Internet: www.jumo.co.uk

**JUMO Process Control, Inc.**
8 Technology Boulevard
Canastota, NY 13032, USA
Phone: 315-697-JUMO
1-800-554-JUMO
Fax: 315-697-5867
E-mail: info@jumo.us
Internet: www.jumo.us



## Connection diagram

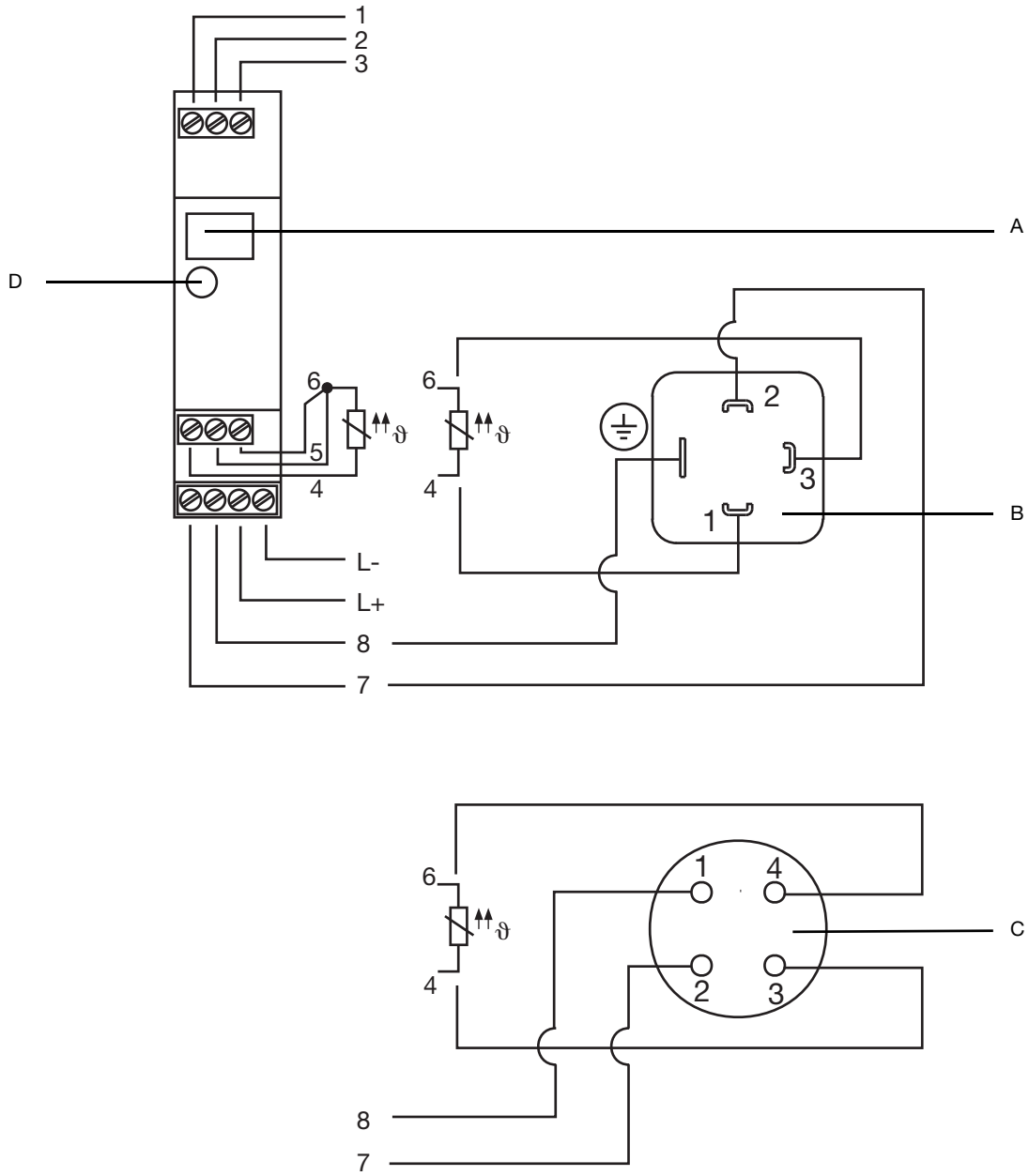


A Setup connection and connection for teach-in connector (on the JUMO ecoTRANS Lf 02)

B Head of a conductivity sensor with Hirschmann connector

C Head of a conductivity sensor with M12 connector

D LED for the indication of operating states

**JUMO GmbH & Co. KG**
Delivery address: Mackenrodtstraße 14,
36039 Fulda, Germany
Postal address: 36035 Fulda, Germany
Phone: +49 661 6003-0
Fax: +49 661 6003-607
E-mail: mail@jumo.net
Internet: www.jumo.net

**JUMO Instrument Co. Ltd.**
JUMO House
Temple Bank, Riverway
Harlow - Essex CM20 2DY, UK
Phone: +44 1279 63 55 33
Fax: +44 1279 63 52 62
E-mail: sales@jumo.co.uk
Internet: www.jumo.co.uk

**JUMO Process Control, Inc.**
8 Technology Boulevard
Canastota, NY 13032, USA
Phone: 315-697-JUMO
1-800-554-JUMO
Fax: 315-697-5867
E-mail: info@jumo.us
Internet: www.jumo.us



## Connection for conductivity sensors

| | Conductivity sensor (JUMO types) | | | JUMO ecoTRANS Lf 01/02 |
|---|---|---|---|---|
| | Plug-in head to DIN 43650 (Hirschmann connector) | Fixed cable | M12 connector | |
| Outer electrode | ⏚ | white | 1 | 8 |
| Inner electrode | 2 | brown | 2 | 7 |
| Temperature compensation | 1<br>3 | yellow<br>green | 3<br>4 | 4[a]<br>6[a] |

[a] Type of connection: 2-wire

| **Outputs** | **Terminal assignments** | | **Symbol** |
|---|---|---|---|
| Analog measurement output (electrically isolated)<br><br>on the JUMO ecoTRANS Lf 01 only | 1<br>3 | +<br>- | 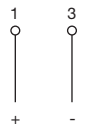 |
| Relay<br><br><br>on the JUMO ecoTRANS Lf 02 only | 1<br>2<br>3 | n.c. (break)<br>common<br>n.o. (make) | 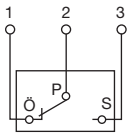 |
| **Measurement inputs** | | | |
| Conductivity sensor | 8<br>7 | outer electrode, on coaxial cells<br>inner electrode, on coaxial cells | 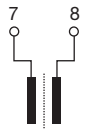 |
| Resistance thermometers in 3-wire circuit | 4<br>5<br>6 | | 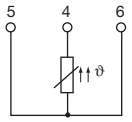 |
| Resistance thermometers in 2-wire circuit | 4<br>6 | | 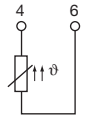 |
| **Supply** | | | |
| Supply | L-<br>L + | | 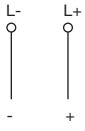 |

**JUMO GmbH & Co. KG**
Delivery address: Mackenrodtstraße 14,
36039 Fulda, Germany
Postal address: 36035 Fulda, Germany
Phone: +49 661 6003-0
Fax: +49 661 6003-607
E-mail: mail@jumo.net
Internet: www.jumo.net

**JUMO Instrument Co. Ltd.**
JUMO House
Temple Bank, Riverway
Harlow - Essex CM20 2DY, UK
Phone: +44 1279 63 55 33
Fax: +44 1279 63 52 62
E-mail: sales@jumo.co.uk
Internet: www.jumo.co.uk

**JUMO Process Control, Inc.**
8 Technology Boulevard
Canastota, NY 13032, USA
Phone: 315-697-JUMO
1-800-554-JUMO
Fax: 315-697-5867
E-mail: info@jumo.us
Internet: www.jumo.us



# Order details

| | | |
|---|---|---|
| | **(1)** | **Basic type** |
| 202731 | | JUMO ecoTRANS Lf 01/02 - Microprocessor Transmitter/Switching Device for Conductivity |
| | **(2)** | **Output** |
| 01 | | with analog output |
| 02 | | with relay output |
| | **(3)** | **Measuring range**[a] |
| 015 | | 0 to 2 mS/cm/K = 1,0 $^{1}/_{cm}$[b] |
| 016 | | 0 to 20 mS/cm/K = 1,0 $^{1}/_{cm}$[c] |
| | **(4)** | **Options** |
| 000 | | without |
| 024 | | including PC setup software |

[a] Possible measuring ranges see "Technical data", setting by using the setup software
[b] The standard measuring range, set in the factory, for type 202731/01
[c] The standard measuring range, set in the factory, for type 202731/02

| | (1) | | (2) | | (3) | | (4) |
|---|---|---|---|---|---|---|---|
| **Order code** | | / | | - | | / | |
| **Order example** | 202731 | / | 01 | - | 015 | / | 000 |

**JUMO GmbH & Co. KG**
Delivery address: Mackenrodtstraße 14,
36039 Fulda, Germany
Postal address: 36035 Fulda, Germany
Phone: +49 661 6003-0
Fax: +49 661 6003-607
E-mail: mail@jumo.net
Internet: www.jumo.net

**JUMO Instrument Co. Ltd.**
JUMO House
Temple Bank, Riverway
Harlow - Essex CM20 2DY, UK
Phone: +44 1279 63 55 33
Fax: +44 1279 63 52 62
E-mail: sales@jumo.co.uk
Internet: www.jumo.co.uk

**JUMO Process Control, Inc.**
8 Technology Boulevard
Canastota, NY 13032, USA
Phone: 315-697-JUMO
1-800-554-JUMO
Fax: 315-697-5867
E-mail: info@jumo.us
Internet: www.jumo.us



# Stock versions

(shipment: 3 working days after receipt of order)

| Article | Part no. |
|---|---|
| 202731/01-015/000 | 00421026 |
| 202731/01-015/024 | 00421035 |
| 202731/02-016/000 | 00421032 |

# Accessories

(available from stock)

| Article | Part no. |
|---|---|
| Conductivity simulator (Data sheet 201090) | 00300478 |
| Process connection for conductivity simulator (DIN connection/bare cable ends) | 00082901 |
| Switching mode power supply, type PS5R-A-24 for DIN rail mouting, input voltage 100 to 240 V AC | 00374661 |
| PC interface (USB/TTL), 2 adapter setup cable | 00456352 |
| Simulators and calibration adapters for pH/Redox and conductivity measurement (202711) | - |
| JUMO BlackLine CR-GT/-EC/-GS - conductive 2-electrode conductivity sensors (202922) | - |
| JUMO ecoLine CR-PVC - conductive 2-electrode conductivity sensors (202923) | - |
| JUMO tecLine CR-VA/-VASL/-PK/-PL - conductive 2-electrode conductivity sensors (202924) | - |
| JUMO tecLine CR-GT - conductive 2-electrode conductivity sensors (202925) | - |
| Cable and plugs (202990) | - |

# Software

| Article | Part no. |
|---|---|
| Setup JUMO ecoTRANS Lf 01/02 (PG 202599) | 00432577 |

**Note:**

All stock items can be freely programmed through the PC setup program. The only differences between them are varying presettings with regard to the measurement range and cell constant.
The following presettings are common to all stock versions: automatic temperature compensation with Pt100 (ATC), 4 to20 mA output (JUMO ecoTRANS Lf 01) or switching point set to max. range (JUMO ecoTRANS Lf 02), temperature coefficient alpha = 2.2 %/°C.
It is **not** possible to switch over from type JUMO ecoTRANS Lf 01 to type JUMO ecoTRANS Lf 02 or vice versa.