JUMO GmbH & Co. KG
Delivery address: Mackenrodtstraße 14
36039 Fulda, Germany
Postal address: 36035 Fulda, Germany
Phone: +49 661 6003-0
Fax: +49 661 6003-607
E-mail: mail@jumo.net
Internet: www.jumo.net

JUMO Instrument Co. Ltd.
JUMO House
Temple Bank, Riverway
Harlow, Essex CM20 2DY, UK
Phone: +44 1279 635533
Fax: +44 1279 635262
E-mail: sales@jumo.co.uk
Internet: www.jumo.co.uk

JUMO Process Control, Inc.
8 Technology Boulevard
Canastota, NY 13032, USA
Phone: 315-697-5866
1-800-554-JUMO
Fax: 315-697-5867
E-mail: info@jumo.us
Internet: www.jumo.us

JUMO di 308

Digital Indicator, microprocessor-controlled, with max. 2 inputs, wide range of expansion options, panel-mounting DIN housing, bezel 96mm x 48mm



JUMO di 308
Type 701550/...

Brief description

The JUMO di 308 indicator shows temperatures in °C or °F, and standard signals in plain text. Even the basic instrument is provided with one analog input, two binary inputs, two relay outputs, two logic outputs, and a supply voltage for a 2-wire transmitter. Three expansion slots can be filled with additional inputs, outputs and interfaces.
The high-contrast, multicolor LCD for showing measurements and for operator prompting consists of a 5-digit 7-segment display (for the measurement or for setting parameters), an 8-character 16-segment display with color changeover (for the value, parameter name, channel name, process/alarm text as a running text of max. 24 characters, or a pseudo bar graph), and 4 switch status indicators for the binary outputs.
Four keys are provided on the instrument for operation and configuration, and a setup program for PC use is available as an option (e.g. for configuring the math and logic functions, and the input of display texts).
Linearizations for the usual transducers are stored, a customer-specific linearization table can be programmed through 10 interpolation points or by entering the coefficients of the polynomial.
An RS422/485 or a PROFIBUS-DP interface can be used to integrate the instrument into a data network. The electrical connection is made at the back, via screw terminals.
The possible input and output configurations are shown in the following block diagram.

Block structure

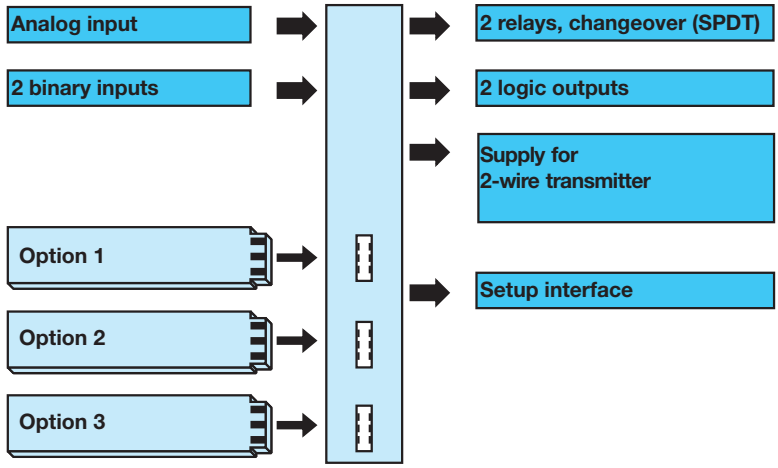

Option boards:
– Analog input
– 2 binary inputs
– 1 relay 230V/8A, changeover (SPDT)
– 2 relays 230V/3A, make (SPST-NO), with common pole
– 1 solid-state relay
– Analog output (voltage/current)
– RS422/485 interface
– PROFIBUS-DP interface

Key features

- Configurable process display text (max. 24-character running text)
- Alarm signal text with color changeover green-red (also as running text)
- Up to two configurable analog inputs
- Three option slots
- Math and logic module (option)
- 4 limit comparators
- Fast and convenient configuration through setup program
- RS422/485 interface (option)
- PROFIBUS-DP interface (option)

Approvals/marks of conformity (see Technical data)

2012-05-30/00485042

Technical data

Thermocouple input

Designation		Measuring range	Meas. accuracy[1] (incl. cold junction)	Ambient temperature error
Fe-Con L		-200 to +900°C	≤ 0.25%	100ppm/°C
Fe-Con J	EN 60584	-200 to +1200°C	≤ 0.25%	100ppm/°C
Cu-Con U		-200 to +600°C	≤ 0.25%	100ppm/°C
Cu-Con T	EN 60584	-200 to +400°C	≤ 0.25%	100ppm/°C
NiCr-Ni K	EN 60584	-200 to +1372°C	≤ 0.25%	100ppm/°C
NiCr-Con E	EN 60584	-200 to +1000°C	≤ 0.25%	100ppm/°C
NiCrSi-NiSi N	EN 60584	-100 to +1300°C	≤ 0.25%	100ppm/°C
Pt10Rh-Pt S	EN 60584	-50 to +1768°C	≤ 0.25% (from 0°C)	100ppm/°C
Pt13Rh-Pt R	EN 60584	-50 to +1768°C	≤ 0.25% (from 0°C)	100ppm/°C
Pt30Rh-Pt6Rh B	EN 60584	0 to +1820°C	≤ 0.25% (from 300°C)	100ppm/°C
W5Re-W26Re C		0 to +2320°C	≤ 0.25%	100ppm/°C
W3Re-W25Re D		0 to +2495°C	≤ 0.25%	100ppm/°C
W3Re-W26Re		0 to +2400°C	≤ 0.25%	100ppm/°C
Chromel-copel	GOST 8.585-2001	-200 to +800°C	≤ 0.25%	100ppm/°C
Cold junction		Pt100, internal		

RTD input

Designation		Connection circuit	Measuring range	Meas. accuracy[1]		Ambient temperature error
				3-/4-wire	2-wire	
Pt100	EN 60751	2-wire / 3-wire / 4-wire	-200 to +850°C	≤ 0.05%	≤ 0.4%	50ppm/°C
Pt500	EN 60751	2-wire / 3-wire / 4-wire	-200 to +850°C	≤ 0.2%	≤ 0.4%	100ppm/°C
Pt1000	EN 60751	2-wire / 3-wire / 4-wire	-200 to +850°C	≤ 0.1%	≤ 0.2%	50ppm/°C
Pt50	GOST 6651-94	2-wire / 3-wire / 4-wire	-200 to +850°C	≤ 0.1%	≤ 0.8%	50ppm/°C
Pt100	GOST 6651-94	2-wire / 3-wire / 4-wire	-200 to +850°C	≤ 0.05%	≤ 0.4%	50ppm/°C
Cu50	GOST 6651-94	2-wire / 3-wire / 4-wire	-50 to +200°C	≤ 0.2%	≤ 1.6%	50ppm/°C
Cu100	GOST 6651-94	2-wire / 3-wire / 4-wire	-50 to +200°C	≤ 0.1%	≤ 0.8%	50ppm/°C
KTY11-6		2-wire	-50 to +150°C	–	≤ 2.0%	50ppm/°C
Sensor lead resistance		30Ω max. per lead for 3-wire/4-wire circuit				
Measuring current		approx. 250µA				
Lead compensation		Not required for 3-wire or 4-wire circuit. With a 2-wire circuit, the lead resistance can be compensated in software by a correction of the process value.				

Input for standard signals

Designation	Measuring range	Meas. accuracy[1]	Ambient temperature error
Voltage	0(2)—10V 0—1V Input resistance R_{IN} > 100kΩ	≤ 0.05% ≤ 0.05%	100ppm/°C 100ppm/°C
Current	0(4)—20mA, voltage drop ≤ 1.5V	≤ 0.05%	100ppm/°C
Resistance transmitter	min. 100Ω, max. 4kΩ	±4Ω	100ppm/°C

Binary inputs

Floating contacts	open = not active; short-circuit to GND = active

Measuring circuit monitoring

Transducer		Detection of overrange/underrange	Detection of probe/lead short-circuit	Detection of probe/lead break
Thermocouple		yes	no	yes
RTD		yes	yes	yes
Voltage	2 — 10V	yes	yes	yes
	0 — 10V	yes	no	no
	0 — 1V	yes	no	no
Current	4 — 20mA	yes	yes	yes
	0 — 20mA	yes	no	no
Resistance transmitter		no	no	yes
In the event of a fault, the outputs move to a defined (configurable) status.				

[1] The accuracy refers to the max. measurement range span. The linearization accuracy is reduced with short spans.

Outputs

Relay, changeover (SPDT) - contact rating - contact life	 5A at 230V AC resistive load 350 000 operations at rated load / 750 000 operations at 1A
Logic outputs	0/12V / 25mA max. (sum of all output currents 30mA max.)
Supply voltage for 2-wire transmitter	electrically isolated, not stabilized 15.8 — 15.2V / 30 — 50mA
Relay, changeover (SPDT), option - contact rating - contact life	 8A at 230VAC resistive load 100 000 operations at rated load / 350 000 operations at 3A
Relay, make (SPST-NO), option - contact rating - contact life	 3A at 230VAC resistive load 350 000 operations at rated load / 900 000 operations at 1A
Solid-state relay (option) - contact rating - protection circuitry	 1A at 230V varistor
Voltage (option) - output signals - load resistance - accuracy	 0 — 10V / 2 — 10V $R_{load} \geq 500\Omega$ ≤ 0.5%
Current (option) - output signals - load resistance - accuracy	 0 — 20mA / 4 — 20mA $R_{load} \leq 500\Omega$ ≤ 0.5%

A/D converter

Resolution	dynamic up to 16 Bit
Sampling cycle time	50ms, 90ms, 150ms, 250ms (configurable)

Display

Type	LCD with background lighting
Display 1	7-segment display, 18mm high, 5 digits, color: red
Function of display 1	measurement display and parameter setting
Display 2	16-segment display, 7mm high, 8 digits, color: red/green (switchable)
Function of display 2	24-character running text display (alarms), display of measurements or parameter names
Display 3	4 switching status indicators (K1 to K4), 3mm high

Electrical data

Supply voltage (switch-mode PSU)	110 — 240V AC -15/+10%, 48 — 63Hz or 20 — 30V AC/DC, 48 — 63Hz
Electrical safety	to EN 61010, Part 1 overvoltage category III, pollution degree 2
Power consumption	13VA max.
Data backup	EEPROM
Electrical connection	at the back, via screw terminals, conductor cross-section up to 2.5mm² (see table on page 5)
Electromagnetic compatibility (EMC) - interference emission - interference immunity	EN 61326-1 Class B to industrial requirements

Housing

Housing type	plastic housing for panel mounting to IEC 61554
Depth behind panel	90 mm
Ambient/storage temperature range	0 to 55°C / -30 to +70°C
Climatic conditions	rel. humidity ≤ 90% annual mean, no condensation
Operating position	horizontal
Enclosure protection	to EN 60529, front IP65 / back IP20
Weight (fully fitted)	approx. 380g

Interface

Modbus

Interface type	RS422/RS485
Protocol	Modbus, Modbus Integer
Baud rate	9600, 19200, 38400
Device address	0 — 255
Max. number of nodes	32

PROFIBUS-DP

Device address	0 — 255

Approvals/approval marks

Approval mark	Testing agency	Certificate/ certification number	Test basis	valid for
c UL us	Underwriters Laboratories	E 201387	UL 61010-1 CAN/CSA-C22.2 No. 61010-1	JUMO di 308 Type 701550/...

Customized linearization

In addition to the linearizations for the usual transducers, a customer-specific linearization can be created. The programming is carried out in the setup program, in the form of a table of values (10 value pairs) or a formula (coefficient entry of polynomial).

User data

Parameters which frequently have to be changed by the user can be combined at the user level, under “User data” (only through the setup program).

Math and logic module (extra code)

The math module makes it possible to integrate measurements from the analog inputs into a mathematical formula, so that the calculated process variable is displayed.
The logic module can be used, for instance, to make a logical combination of binary inputs and limit comparator states.
Up to two math or logic formulae can be entered through the setup program, and the results of the calculations can be presented at the outputs or via the display.

Binary functions

- key/level inhibit
- display off
- text display
- color changeover
- resetting MIN/MAX values
- “hold” function
- acknowledge limit comparators
- taring function
- resetting the taring function
- jump to next scroll parameter

The logic functions can be combined with one another (only through the setup program).

Functions of the outputs

- analog input variables
- math
- limit comparators
- binary inputs
- logic formula

Setup program for PC (accessory)

The PC setup program for configuring the instrument is available in English, French, German and other languages. It can be used to create and edit data sets, transfer them to the instrument or read them out from it. The data can be saved and printed.
The program includes a startup function for recording and visualizing measurement data.

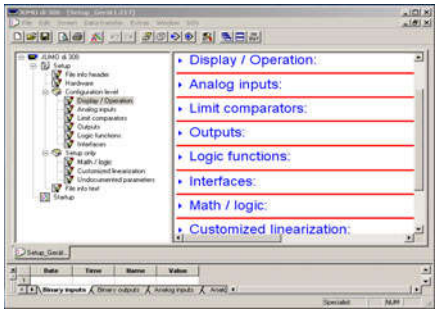

Interfaces

Setup interface

The setup interface is integrated as standard in the indicator. It can be used to configure the instrument, in conjunction with the setup program (accessory) and setup interface (accessory).

RS422/RS485 interface

The serial interface serves for communication with supervisory systems, using the Modbus protocol.

PROFIBUS-DP

The indicator can be integrated into a field bus system according to the PROFIBUS-DP standard via the PROFIBUS-DP interface. This PROFIBUS version is especially designed for communication between automation systems and decentralized peripheral devices at the field level, and optimized for speed.
Data transmission is made serially, using the RS485 standard.
GSD generator, the project-planning tool that is supplied with the package (GSD = Gerätestammdaten, i.e. device data), is used to make a selection of device characteristics for the indicator, to create a standardized GSD file that is used to integrate the indicator into the field bus system.

Displays and controls



(1)	**7-segment display** (measurement display) 5-digit, red; configurable decimal place (automatic adjustment on display overflow)
(2)	**16-segment display** (24-character running text, parameter name, level symbols) 8-character, green or red; configurable decimal place
(3)	**Indication** yellow; for four switching states of max. four outputs (indicator lit up = on)
(4)	**Keys**

Dimensions

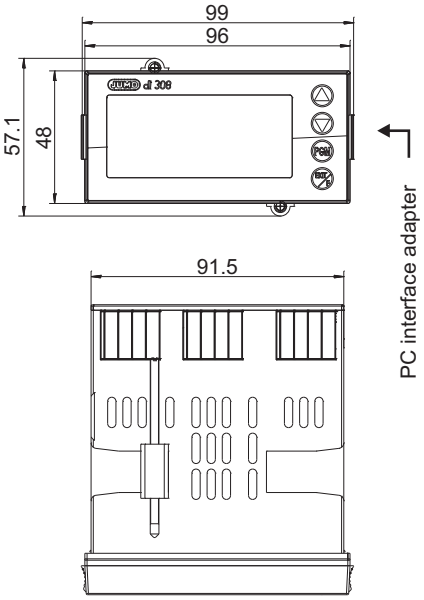

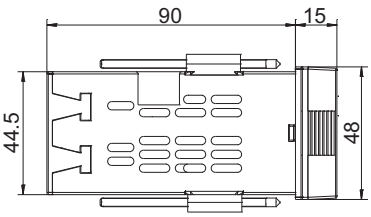

Panel cut-out

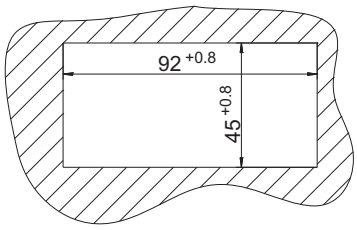

Side-by-side mounting

Minimum spacing of panel cut-outs		
	horizontal	vertical
without setup plug:	30mm	11mm
with setup plug (see arrow):	65mm	11mm

Connection diagram

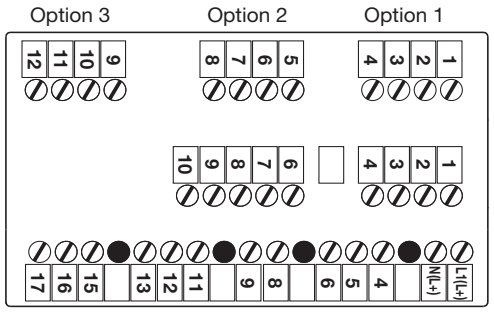

Conductor cross-sections and core-end ferrules for installation

Core-end ferrule	Conductor cross-section		Min. length of core-end ferrule or stripped
	min.	max.	
without ferrule	0.34mm²	2.5mm²	10mm (stripped)
without lip	0.25mm	2.5mm²	10mm
with lip up to 1.5mm²	0.25mm²	1.5mm²	10mm
with lip from 1.5mm²	1.5mm²	2.5mm²	12mm
twin, with lip	0.25mm²	1.5mm²	12mm

Terminal strip 3

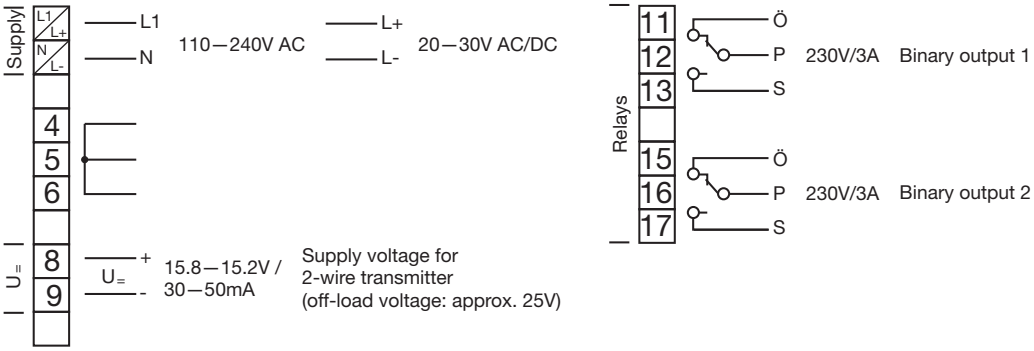

Terminal strip 2

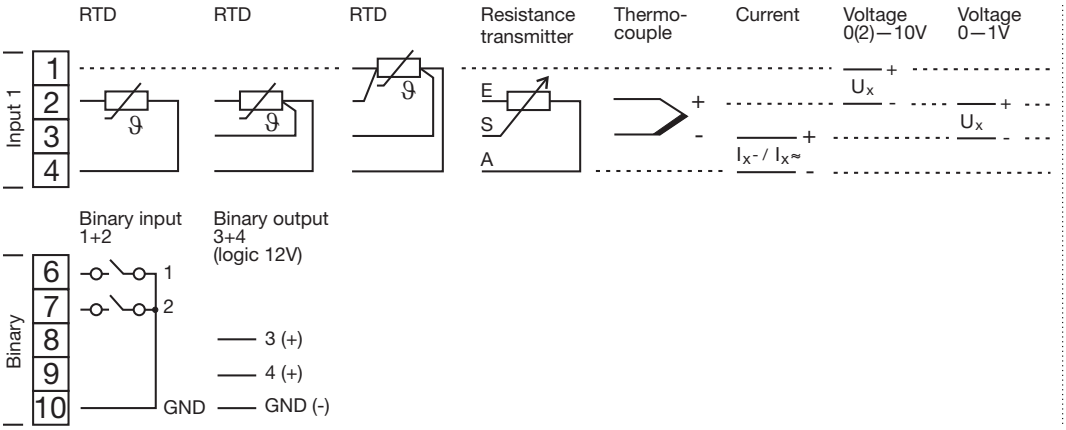

Terminal strip 1

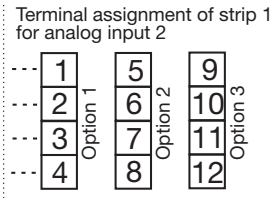

Terminal strip 1

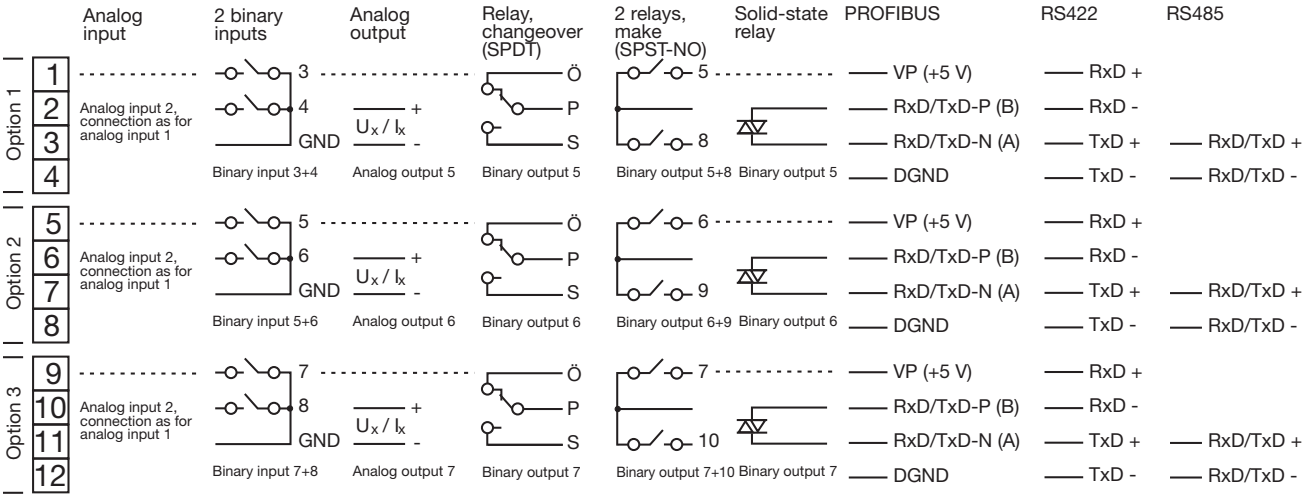

Order details

Basic type

701550	JUMO di 308 including 1 analog input, 2 binary inputs, 2 relay outputs, 2 logic outputs, 96mm x 48mm bezel

Basic type extensions

1			Basic type
			Version
	8		standard, with factory settings
	9		programming to customer specification
			logic outputs (2 are available)
		1	0/12V

Option slots

1.	2.	3.	Option slot	Max. number
0	0	0	not used	
1	1	1	analog input 2 (universal)	1
2	2	2	relay output, 1 changeover (SPDT)	2
3	3	3	relay output, 2 make (SPST-NO)	2
4	4	4	analog output	2
5	5	5	2 binary inputs	2
6	6	6	solid-state relay 1A	2
7	7	7	RS422/485 interface	1
8	8	8	PROFIBUS-DP interface	1

Caution:
Any assignment of the options to the slots (slots 1, 2 or 3) is possible. Their max. number, however, must not be exceeded.

Supply voltage

23	110 — 240V AC, 48 — 63Hz
25	20 — 30V AC/DC, 48 — 63Hz

Extra codes

000	none
214	math and logic module

	/				-				-		/		**Order code**
701550	**/**	**1**	**8**	**1**	**-**	**4**	**0**	**0**	**-**	**23**	**/**	**000**	**Order example**

Standard accessories

- indicator
- seal
- mounting brackets
- Operating Instructions B 701550.0 in DIN A6 format

Accessories

- PC setup program
  Sales No. 70/00493223
- PC interface with TTL/RS232 converter and adapter
  Sales No. 70/00350260
- PC interface with USB/TTL converter, adapter (socket) and adapter (plug)
  Sales No. 70/00456352

Further accessories

- A CD with the demo setup program and PDF documents (operating instructions and further documentation) can be ordered separately.

View of the three option slots

