Bimetal Temperature Switches Model TFS35

Modelcode type: TFS35

Item number: 48798288

Bimetal Temperature Switches Model TFS35	
Nominal switching temperature 1	+70 deg C
Contact type	1 x Normally closed (NC)
Switch Voltage, max.	DC 24 V, 3 A
Thermowell	
Thermowell material	Stainless Steel
Thermowell diameter [F1]	10,0 mm
Process connection [d6 o. E]	Male thread G1/2B
Insertion length [U1]	150 mm
Key width [SW]	SW24
Electrical connection	
Operating conditions	
Ambient temperature	-40 ... +90°C (-40 ... +194°F)
static operating pressure	maximum 50 bar
Protection [IP]	IP66 / IP67

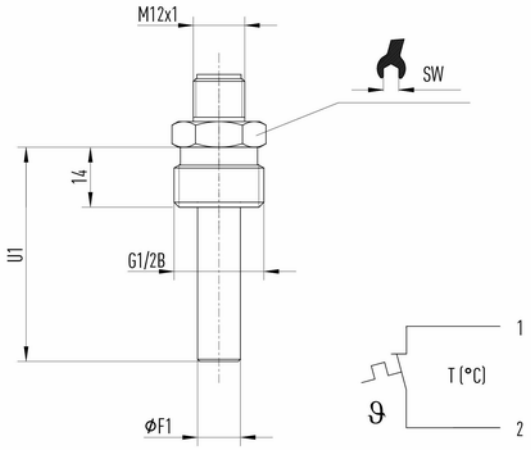

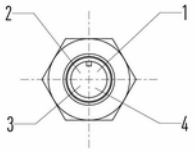

© Copyright by WIKA: Reproduction of this document is prohibited