DF3210

Power supply module for electronic circuit breaker

Supply Module 24VDC/reverse

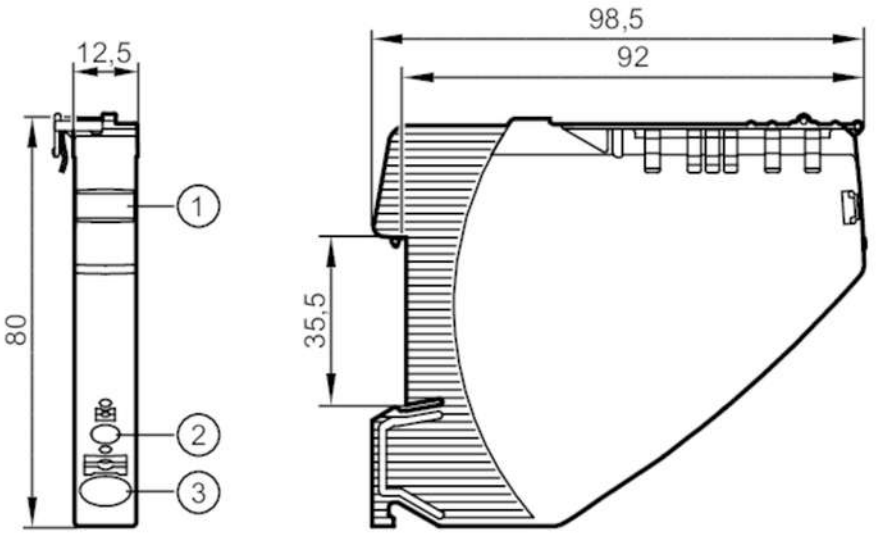

1 panel for labelling
2 push-in terminal 0 V
3 push-in terminal 24 V DC

Electrical data		
Operating voltage	[V]	to SELV/PELV
Nominal voltage DC	[V]	24
Input voltage DC	[V]	19.2...30
Protection class		III
Reverse polarity protection		yes
Mains buffering time (nominal voltage 24 V DC)	[ms]	10
Input current (nominal voltage 24 V DC)	[A]	40
Closed-circuit current	[mA]	0.2
Operating conditions		
Ambient temperature	[°C]	-25...60
Storage temperature	[°C]	-40...70
Protection		IP 20; (on the front)
Pollution degree		2

Tests / approvals		
EMC	EN 61000-6-3	radiation of interference
	EN 61000-6-2	immunity

Mechanical data		
Weight	[g]	61
Dimensions	[mm]	80 x 12.5 x 98

Electrical connection

push-in terminals:

DF3210

Power supply module for electronic circuit breaker

Supply Module 24VDC/reverse

contact lever/strip:

Connection

