MN508S

Magnetically coded sensor

MN44008-AKOA/-H/US/8P

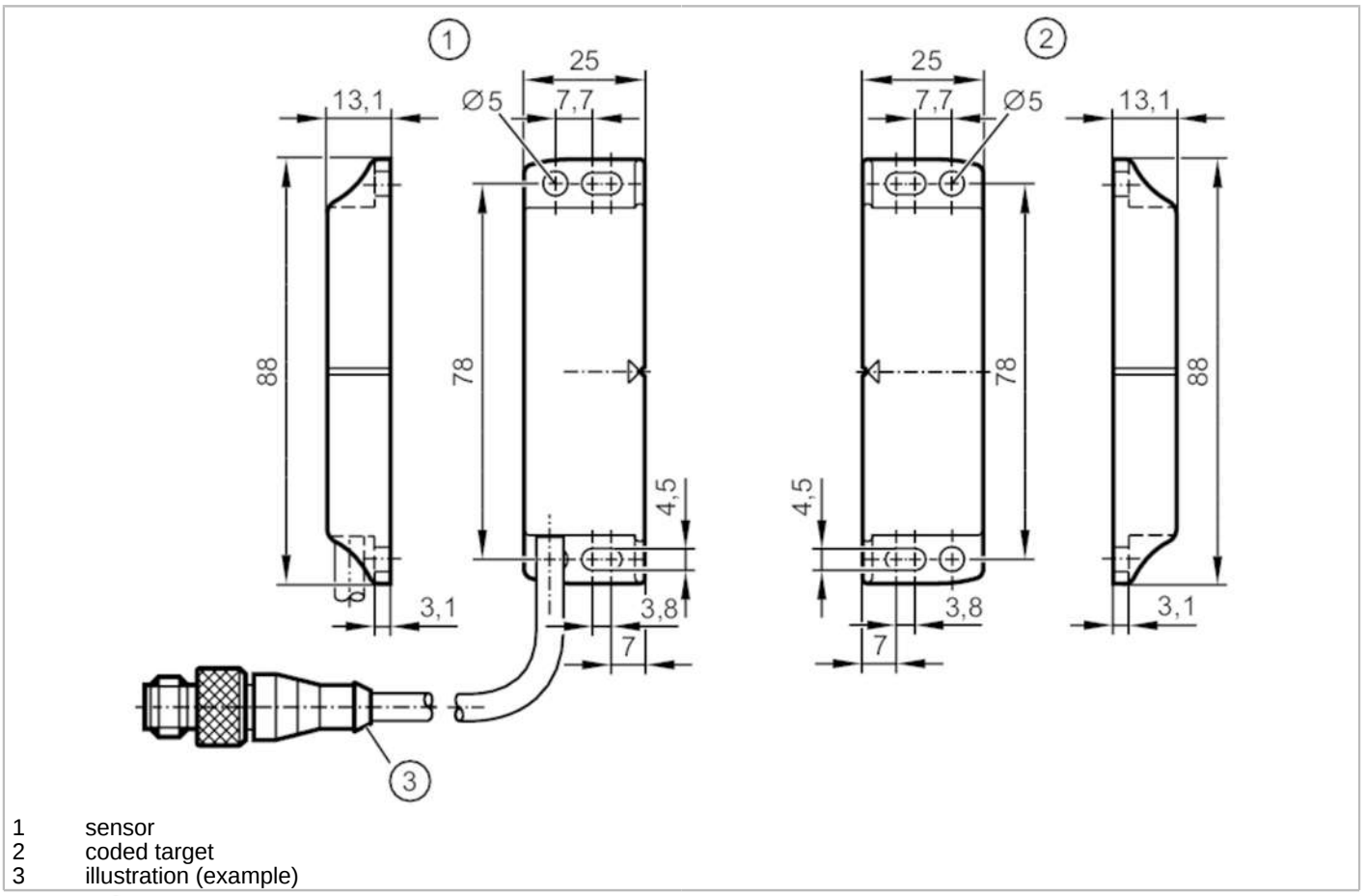

1 sensor
2 coded target
3 illustration (example)

Product characteristics		
Output function		2 x normally open, 1 x normally closed; (potential-free)
Sensing range	[mm]	8; (with defined actuator)
Housing		rectangular
Dimensions	[mm]	88 x 13.1 x 25
Application		
Design		coded target
Type of operation		permanent operation
Application		for safety-related applications
Electrical data		
Operating voltage	[V]	24 DC
Rated insulation voltage	[V]	60
Protection class		III
Reverse polarity protection		no
Internal resistance (Ri)	[Ω]	10; (1 W)
Outputs		
Output function		2 x normally open, 1 x normally closed; (potential-free)
Permanent current rating of switching output DC	[mA]	50

MN508S

Magnetically coded sensor

MN44008-AKOA/-H/US/8P

Switching frequency DC	[Hz]	150
Output data		Interface type A
Short-circuit proof		no
Max. capacitive load CL_max	[nF]	20
Detection zone		
Sensing range	[mm]	8; (with defined actuator)
Safe switching-off distance s(ar)	[mm]	20
Response times		
Response time to safety request	[ms]	10
Max. fall time	[ms]	0.1
Max. make time incl. bounce	[ms]	0.6
Operating conditions		
Applications		class C to EN 60654-1 weatherproof application
Ambient temperature	[°C]	-25...80
Note on ambient temperature		operational life ≤ 87600 h
Ambient temperature	[°C]	10...40
Note on ambient temperature		operational life ≤ 175200 h
Max. relative air humidity	[%]	briefly: 5...95 %; permanent: 5...70 %
Air pressure	[kPa]	80...106
Max. height above sea level	[m]	2000
Salt spray		no
Protection		IP 67; IP 69K; (protected cable laying)

Tests / approvals			
EMC		IEC 60947-5-1	
Shock resistance		EN 60068-2-27	30 g (11 ms)
Vibration resistance		IEC 60068-2-6	10 g (10...55 Hz)
UL approval		Ta	10...40 °C
		Enclosure type	Type 1
		File number UL	E174191

Safety classification		
Mission time TM	[h]	≤ 175200
Mission time TM (additional indication)		20 years
B10D		20.000.000; (without load; at max. load DC 12, 24 V, 50 mA: 400.000)
Mechanical data		
Weight	[g]	176.6
Housing		rectangular
Mounting		non-flush mountable
Dimensions	[mm]	88 x 13.1 x 25
Materials		housing: PA; mounting plate: stainless steel (1.4301 / 304)
Tightening torque	[Nm]	0.8...2
Accessories		
Items supplied		coded target

MN508S

Magnetically coded sensor

MN44008-AKOA/-H/US/8P

Remarks	
Remarks	In connection with a G150xS / AC4x2S type evaluation unit, it is possible to reach up to PL e (ISO 13849-1) or SIL cl 3 (IEC 62061)
Pack quantity	1 pcs.

Electrical connection - plug

Cable: 0.1 m, PVC, Ø 5 mm

Connector: 1 x M12; coding: A



Connection

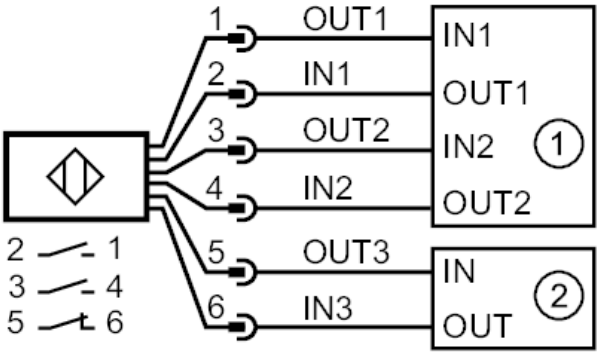

1	safety-related logic unit
2	Programmable Logic Controller (PLC)