Brand of NTN corporation

Technical data

UKP218H

Bearing units



Grey cast housing, radial insert ball bearing with adapter sleeve,seal with slinger

KIT CONTENT

UK218G2H, P218

VISUAL (S)

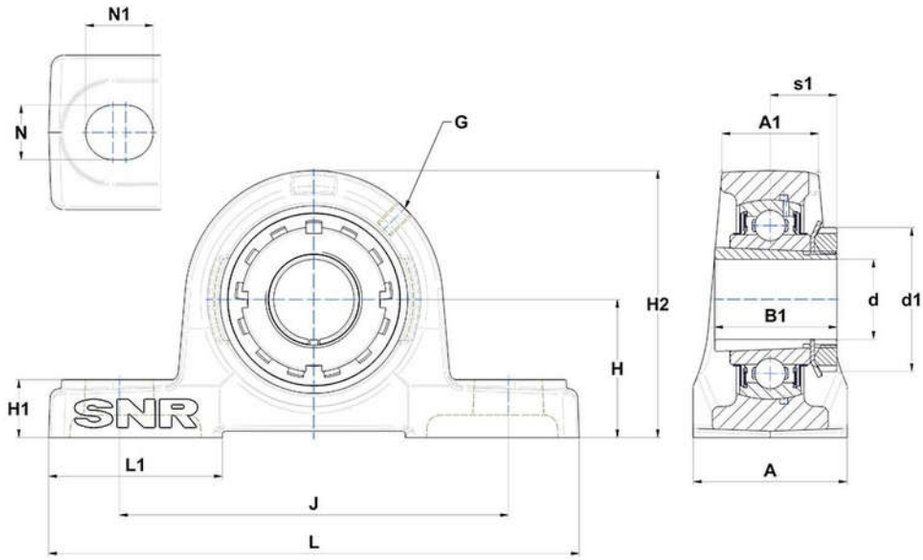

PRODUCT DEFINITION

Brand	SNR
A - Housing width	88 mm
A1 - Housing top width	55 mm
B - Width of Inner Ring	48 mm
d - Shaft diameter	80 mm
d1 - Outer dia of eccent. Lock. collar / nut of adapter sleeve	120 mm

PRODUCT DEFINITION	
G - Grease fitting	M10x1
H - Distance mounting base to centerline spheric. seating diam.	101,6 mm
H1 - Housing foot height	34 mm
H2 - Housing height	200 mm
J - Mounting holes distance	262 mm
L - Housing length	327 mm
L1 - Housing foot length	100 mm
N - Mounting hole dimension	27 mm
N1 - Mounting hole length	33 mm
s1 - Distance nut to middle of bearing raceway	42 mm

PRODUCT PERFORMANCE	
C - Dynamic load rating	96000000 mN
C0 - Static load rating	71500000 mN
Operating temperature min.	253,15 °K
Operating temperature max.	373,15 °K

OTHER FEATURES	
Mass	13,52 kg
Adapter sleeve designation	H2318