TABLE 1

MOLEX P/N	ENG. NO.	LED
1202510064	BKB8030-FBC	NO
1202510065	BKB803P-FBC	YES
1202510066	BKB803N-FBC	YES

TABLE 2 BILL OF MATERIAL

ITEM	DESCRIPTION	MATERIAL	FINISH
1	LABEL	ABS	WHITE
2	SHELL	BRASS	NICKEL PLATED
3	O-RING	NBR	BLACK
4	O-RING	NBR	BLACK
5	CONTACT	BRASS	GOLD OVER NICKEL
6	CONTACT	BRASS	GOLD OVER NICKEL
7	CONTACT	BRONZE	GOLD OVER NICKEL
8	O-RING	FPM	RED
9	LED	NO LED = PA	BLACK
		WITH LED = PA	TRANSPARENT
10	SHELL	BRASS	NICKEL PLATED
11	HOUSING	PBT	BLACK

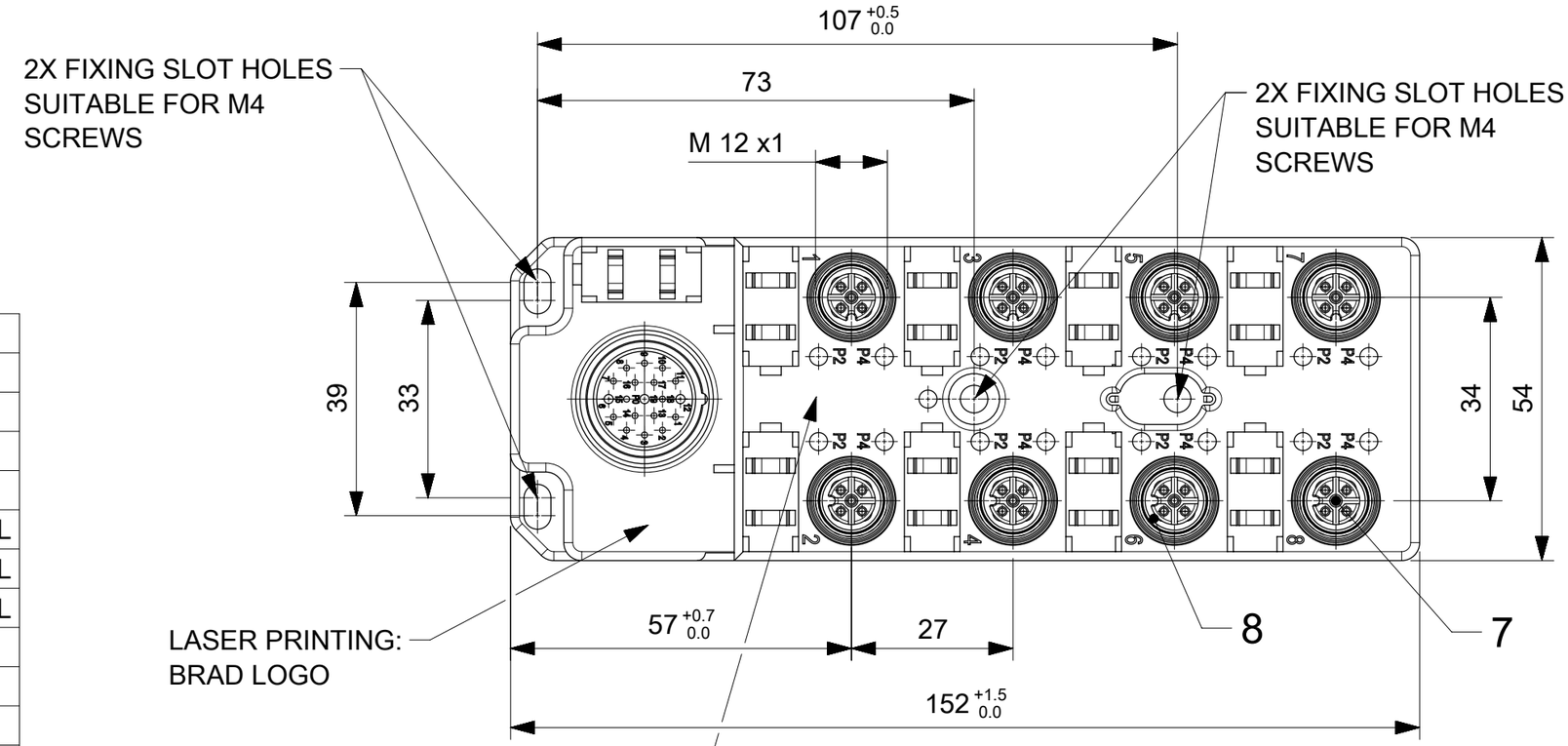

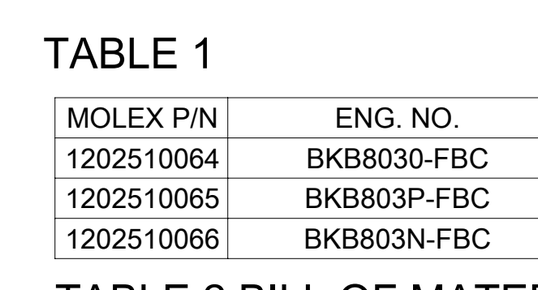

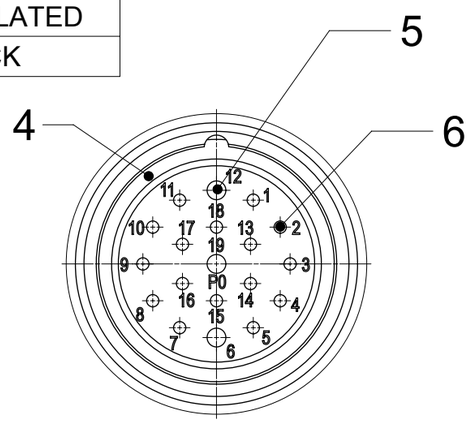

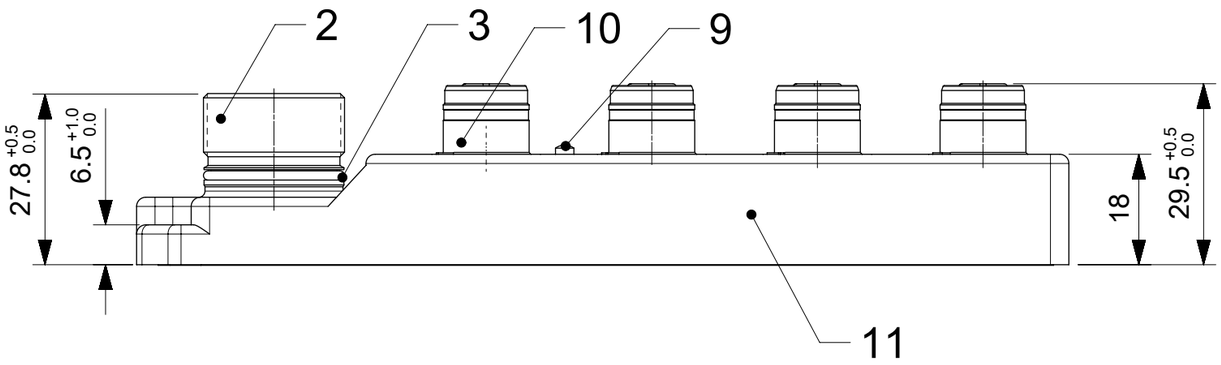

GENERAL CHARACTERISTICS:

ELECTRICAL AND MECHANICAL DATA ACC. TO IEC 61076-2-101

NOMINAL VOLTAGE:	10-30 V DC
AMPERE RATING:	4 A PER PORT / 12 A MAX
AMPERE RATING WITH UL REGISTRATION:	3 A PER PORT / 9 A MAX
IP DEGREE OF PROTECTION:	IP 67
TEMPERATURE RANGE:	-25°C to + 85°C

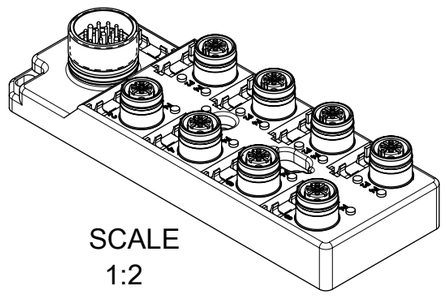

DOCUMENT STATUS	P1	RELEASE DATE	2020/01/17 08:23:48

FORMAT: master-tb-prod-A3
REVISION: H
DATE: 2018/01/18

SYMBOLS
F = 0
E = 0
F = 0
S = 0
▼ = 0
C = 0
☒ = 0
■ = 0
▽ = 0

THIS DRAWING CONTAINS INFORMATION THAT IS PROPRIETARY TO MOLEX ELECTRONIC TECHNOLOGIES, LLC AND SHOULD NOT BE USED WITHOUT WRITTEN PERMISSION

DIMENSION UNITS	SCALE
mm	1:1

GENERAL TOLERANCES (UNLESS SPECIFIED)

ANGULAR TOL	±	1.0 °
4 PLACES	±	
3 PLACES	±	
2 PLACES	±	0.05
1 PLACE	±	0.3
0 PLACES	±	0.5

DRAFT WHERE APPLICABLE MUST REMAIN WITHIN DIMENSIONS

CURRENT REV DESC:

EC NO: 630686
DRWN: SSM 2018/12/13
CHK'D: RSILLER 2020/01/17
APPR: RSILLER 2020/01/17

INITIAL REVISION:
DRWN: SSM 2018/12/13
APPR: RSILLER 2020/01/17

THIRD ANGLE PROJECTION | DRAWING: A3-SIZE | SERIES: 120251

molex

MPIS U12 NON 5P 8PT M23 BK DUAL

PRODUCT CUSTOMER DRAWING

DOCUMENT NUMBER	DOC TYPE	DOC PART	REVISION
1202510064	PSD	000	A

MATERIAL NUMBER	CUSTOMER	SHEET NUMBER
SEE TABLE 1	GENERAL MARKET	1 OF 2

Wiring Diagram NON LED

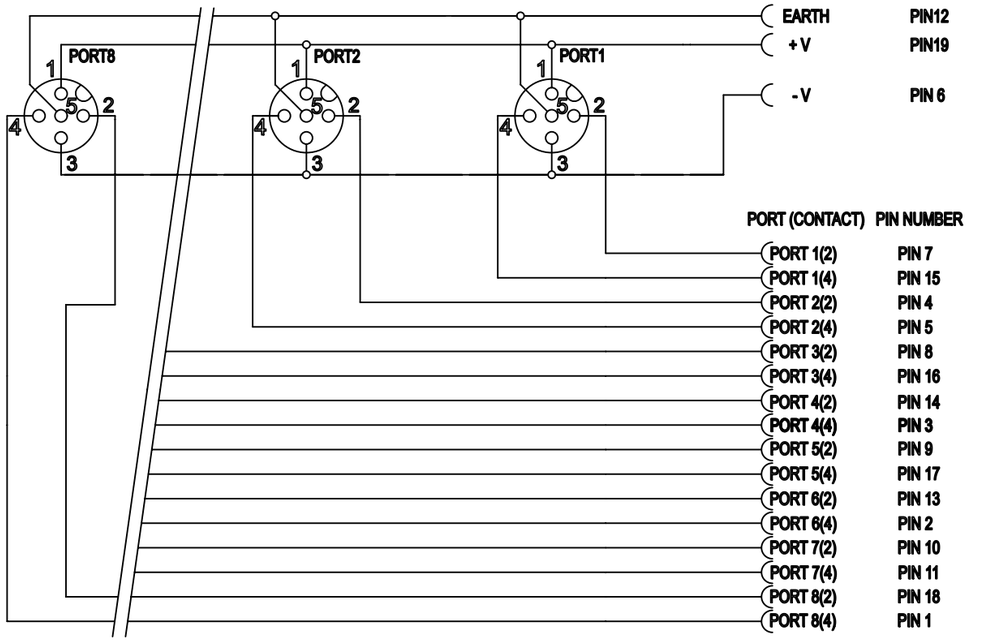

Wiring Diagram PNP

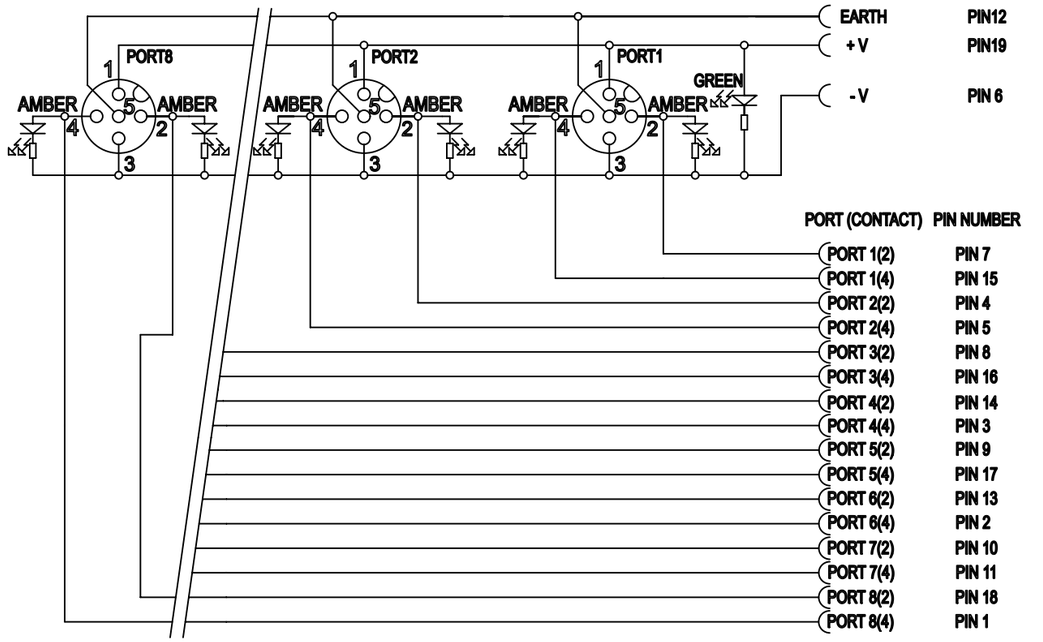

Wiring Diagram NPN Dual

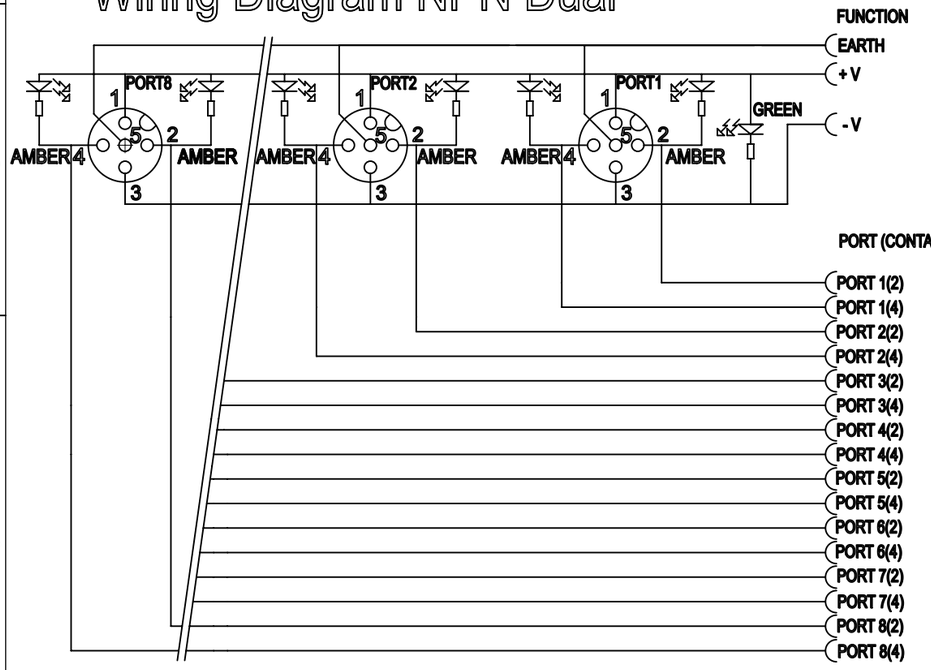

SYMBOLS	THIS DRAWING CONTAINS INFORMATION THAT IS PROPRIETARY TO MOLEX ELECTRONIC TECHNOLOGIES, LLC AND SHOULD NOT BE USED WITHOUT WRITTEN PERMISSION			
= 0	DIMENSION UNITS: mm	SCALE: 1:1	CURRENT REV DESC:	molex
= 0	GENERAL TOLERANCES (UNLESS SPECIFIED)			MPIS U12 NON 5P 8PT M23 BK DUAL
= 0	ANGULAR TOL ± 1.0 °		EC NO: 630686	PRODUCT CUSTOMER DRAWING
= 0	4 PLACES ±		DRWN: SSM 2018/12/13	DOCUMENT NUMBER: 1202510064 / DOC TYPE: PSD / DOC PART: 000 / REVISION: A
= 0	3 PLACES ±		CHK'D: RSILLER 2020/01/17	
= 0	2 PLACES ± 0.05		APPR: RSILLER 2020/01/17	
= 0	1 PLACE ± 0.3		INITIAL REVISION:	
= 0	0 PLACES ± 0.5		DRWN: SSM 2018/12/13	
= 0	DRAFT WHERE APPLICABLE MUST REMAIN WITHIN DIMENSIONS		APPR: RSILLER 2020/01/17	
= 0	THIRD ANGLE PROJECTION	DRAWING: A3-SIZE	SERIES: 120251	MATERIAL NUMBER: SEE TABLE 1 / CUSTOMER: GENERAL MARKET / SHEET NUMBER: 2 OF 2

DOCUMENT STATUS	P1	RELEASE DATE	2020/01/17 08:23:48

FORMAT: master-tb-prod-A3
REVISION: H
DATE: 2018/01/18