

bürkert
FLUID CONTROL SYSTEMS



bürkert
FLUID CONTROL SYSTEMS

Product Overview

Solenoid Valves

894486 / Version 03/12 Print 03/12 www.wolf-corporate.de

Bürkert Fluid Control Systems
Christian-Bürkert-Straße 13-17
74653 Ingelfingen
Germany

Tel. +49 (0) 7940/10-0
Fax +49 (0) 7940/10-91 204

info@burkert.com
www.burkert.com

01 PROCESS VALVES
02 PNEUMATICS
03 SENSORS
04 MICROFLUIDICS
05 MASS FLOW CONTROLLERS
06 SOLENOID CONTROL VALVES
07



Content

3 Introduction
4 Fascination Bürkert
6 Solenoid Valves Overview
8 Direct Acting Valves
20 Servo Assisted Valves
32 Materials of Construction
34 Approvals
36 Service Promise
38 Selection Guide
38 Water and Neutral Liquids
40 Neutral Gases
42 Abrasive and Chemically Aggressive Fluids
44 Steam and High Pressure
46 Accessories
48 System Solutions
50 Contacts at Bürkert

The Solenoid Valve Market Leader

Across thousands of individual solutions and spanning dynamic conditions of global competition our mission is to work towards your success. We have decades of global experience and we have always been positioned at the forefront of solenoid valve technology.

Bürkert has achieved its position as market leader in fluid control through constant evolution of core competence in solenoid valve design and manufacture. We do not outsource any part of the development of solenoid valve technology. We make every little bit. In house in Germany. Precision coil winding, accurate molding and unparalleled machining give us an edge which becomes your advantage.

Our innovative approach to your success is to secure your process efficiency, lower your downtime, increase your safety and boost your competitive advantage. We intend to collaborate with you where we can share our solenoid valve experience. All of our combined knowledge is available to you through consultation, engineering support, selection and commissioning. Everyone in our organisation is interested in listening to you with the aim of presenting you with only the most appropriate solution fluently in your daily application language.

Welcome to the Fascinating World of Fluid Control Systems

Measurement and control: When it comes to working with liquids and gases, we are at your side – as a manufacturer of sophisticated products, as a problem-solver with an eye for the big picture, and as a partner offering you reliable advice. Since we started in 1946, we have developed into one of the world's leading suppliers of Fluid Control Systems. At the same time we have kept our status as a family-owned business with a foundation of strong basic values to highlight the way we think and act.

EXPERIENCE

There are things which are not inherently yours. You have to gather them bit by bit. You receive them from others. And you constantly have to acquire them anew. That is what makes them so valuable. Experience is one of those things. For instance, because of our many years of design and manufacturing experience, we can provide our extensive services to you – from consulting, development, and 3D CAD simulating to testing and after-sales service. Whether individual product solutions or a pioneering new system for the entire control process: Benefit from our experience.



COURAGE

Those who only work toward optimizing things that already exist will eventually reach the limits – technically, financially, or personally. In order to overcome these limits, courage is needed: The courage to be different and trust one's own ideas; the courage to venture into the unknown, searching for new ways to develop products that have never existed before. We have this courage. By pooling and utilizing our competencies across all sectors, you benefit from our cumulative process solenoid knowledge – whether it is in your latest blockbuster machine or the deepest part of your factory.

CLOSENESS

There are things we simply take for granted. Only when they are gone, do we realize how important these things really were. This applies in particular to closeness. Without closeness, it is very difficult to build relationships and a good understanding of one another. As an established medium-sized company, we know that. And that is why we are always there for you. Working with you, we develop the best possible solutions for your projects in all areas of solenoid valves. Our global presence in 35 locations enables us to press ahead with technical innovations for our customers around the world.



Bürkert Product Program

We are one of the few suppliers on the market to cover the complete control loop. Our current product range extends from solenoid valves through process and analytical valves to pneumatic actuators and sensors.



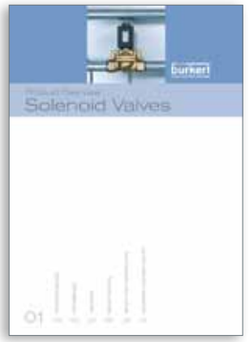

Bürkert offers a remarkable range of servo assisted and direct acting solenoid valves. Read more about them in this brochure.

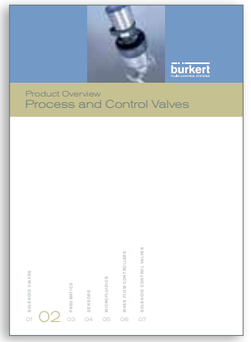

Bürkert offers unlimited modularity for process control with angle-seat, globe and diaphragm valves in the widest range of configurations.



Here you can find our product range of pneumatic valves, valve units and automation systems as well as information on our control cabinet building.



Here you can find our sensors, transmitters and controllers for measuring and controlling flow, temperature, pressure, level, pH/ORP and conductivity.



The brochure contains an overview of Bürkert miniature valves and micro pumps, which allow for precise and safe handling of small volumes of liquids.



This brochure provides technical background information as well as a detailed product overview for the mass flow controller and meter product range.



This brochure presents our solenoid control valves including their respective features, functions and typical applications.

Fluid Fascination

Bürkert's solenoid range has evolved over decades. Only the fittest valves have survived the test of adding true value to our customers around the world. Some designs have already stood the test of time while some display the newest innovations. One thing is for sure … we have the right solution for your most demanding process solenoid requirement.

Direct Acting

- Plunger (see page 10)
- Pivot (see page 14)
- Rocker (see page 16)
- Flipper (see page 18)

Servo Assisted

- 2/2 Plunger Pilot
- 3/2 Isolated Pilot
- 3/2 Air Pilot
- Hard Coupled Zero dP required
- Spring Coupled Low dP
- Simple Servo Assist dP required
- Process Actuation (see Product Overview 03)
- Piston Seal
- Diaphragm Seal
- Hard Coupled (see page 30)
- Plunger and Piston (see page 24)
- Spring Coupled (see page 28)
- Plunger and Diaphragm (see page 22)
- Isolated Pilot and Diaphragm (see page 26)

Direct Acting Valve Anatomy

Coil
Wrapped enamelled copper coil which concentrates the effect of the magnetic field produced when current passes through a conductor. Available to employ alternating (AC) or direct current (DC). DC coils are quieter, show less wear on the plunger or core tube and demonstrate a high holding force whereas an AC coil, although it displays faster switching times, can hum, requiring a shading ring and facing a risk of burn-out if the plunger is ever jammed.

Plunger
A precision mass which reacts to the influence of the magnetic field created by the coil when current is added. The plunger is held by the coil for as long as current flows. When the flow of electric current is halted the spring forces the plunger back to its rest position. Stringent magnetization properties, low magnetic memory effect, high wear resistance as well as high chemical resistance are required.

Spring
The spring usually works against the coil to revert the valve back to its normal position when the valve sees no power.

Electrical Connection
A wide range of global electrical connections are available. Many solenoid systems are designed for IP65 protection.

Core tube
Accurate tube in which the plunger moves.

Shading ring (Required on AC Only)
An electrically conductive ring located in the stopper to prevent constant oscillation based on the mains frequency. Without this addition noise would result from the interaction of the spring force and the magnetic force when, twice per cycle, the voltage drops to zero and the spring wins the contest.

Air Gap and Stopper
Stringent requirements in regards to evenness, flatness and peak-to-valley height are made on the pole faces of the stopper and plunger to achieve a hum-free holding force which is as high as possible. A large air gap between the poles substantially reduces the holding force since the magnetic conductivity of air is substantially less than that of iron.

Encapsulation
Either polyamide or epoxy coating is molded around the coil to protect it from damage. The material determines the working rate of the coil. The encapsulation material and the coil surface area predict good heat dissipation and radiation from the surface. The chemically resistive encapsulation protects the electrical system against harmful influences such as dust, dirt and moisture.

Orifice
Usually measured by diameter in mm this determines the area on which the media pressure will act and the gap through which the media will flow when the valve is energized. Bürkert deliver valves with orifice diameters from 0.05 mm to 65 mm.

Fluidic Connection
Many fluidic sizes and connections are available to meet local geographic or industry specific standards.

Seal & Seat
A seal is the soft material, connected permanently to the plunger, which halts the flow of fluid from one side of the orifice to the other when sitting on the seat which is a raised area on the orifice which concentrates the pressure of the seal.

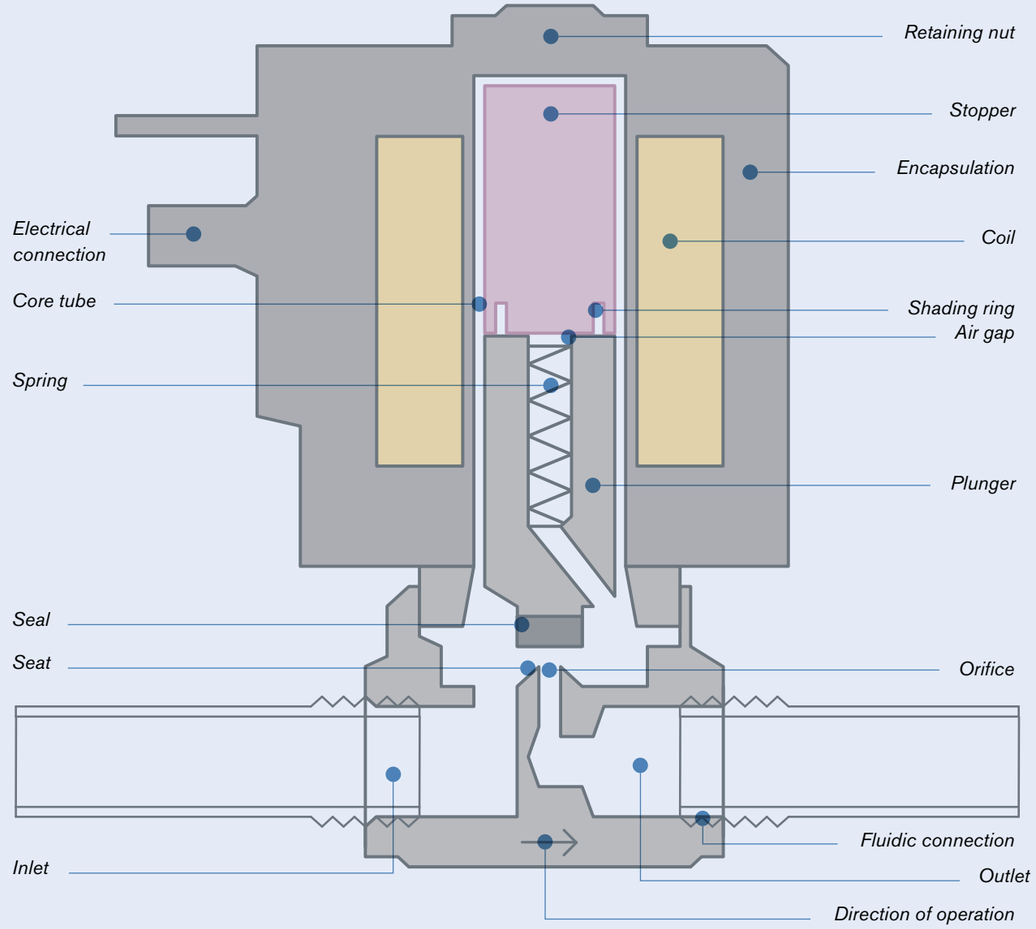

Solenoid valves are the most frequently used control elements in fluidics.
Their tasks are to shut off, release, dose, distribute or mix fluids (liquids and gases).
They are confronted with many different requirements in a plethora of application environments and must offer:

- *fast and safe switching*
- *high reliability*
- *long service life*
- *good medium compatibility of the materials used*
- *low control power*
- *compact design*

Direct Acting: Plunger 2-way

The direct acting plunger solenoid valve is the most common and utilizes a rugged, proven working principle.

When no electrical power is applied to coil the core spring, assisted by the fluid pressure, forces the plunger and the attached seal onto the valve seat and the path from the inlet to the outlet is blocked. When power is applied the solenoid coil generates enough magnetic force to pull the plunger and seal upwards against the spring and fluid pressure, the path from inlet to outlet is opened and flow begins.

This type of valve has a broad field of application but should be restricted to neutral and clean fluids, as there is no separation of the media from the magnetic actuation and the fine tolerances make operation with dirty liquids difficult.

Flow direction is usually from above the seat and these types of valves are available in both normally open and normally closed variants.

The maximum pressure the valve can open against depends directly on the nominal diameter, the spring force and the power of the coil. All of these valves employ quite weak springs and therefore have only low backpressure tightness. Impulse coils are also available which require only a brief current pulse to switch. The plunger is then held by an integrated permanent magnet. A second release coil is used to push the plunger away from the permanent magnet. No electrical power is required for holding the switched position and no heat is transferred during this time.

Bürkert offers this type of valve from orifice diameters from 0.05 mm to 6 mm. Both AC and DC voltages are available as well as a variety of body materials and connections.



Typ 6011



Typ 6013



Typ 0255

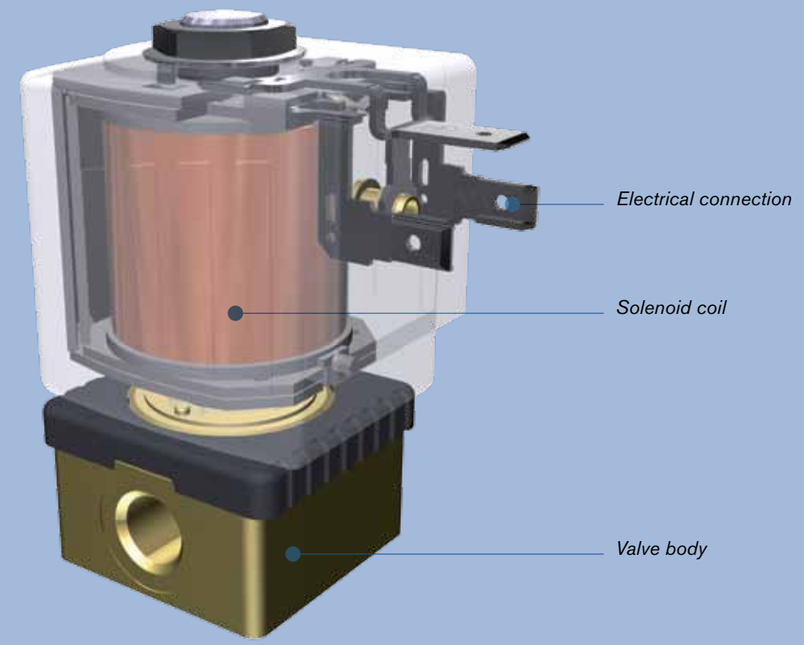

2/2-way plunger-type solenoid valve type 6013

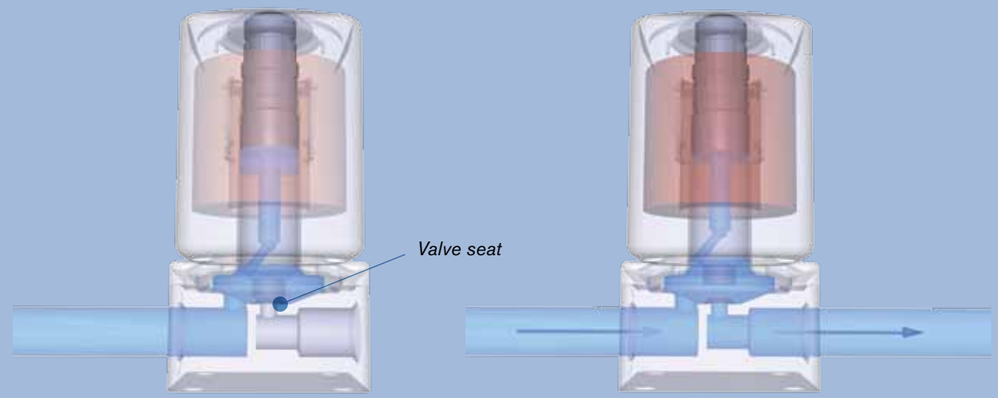

De-energized ***Energized***

You can find the 3D-animation of this functional schema in the PDF version of this brochure.

Direct Acting: Plunger 3-way

These valves have three ports and two seats. One valve seat is always open while the other is closed.

These valves can be used to mix and distribute, and are often used with compressed air to pilot larger pneumatically driven valves.

A normally closed 3/2-way valve does not allow flow from the pressure port (P) to the A port when no voltage is applied but the A port is directly connected to the R port. In this de-energized state, a strong conical spring, acting against the media pressure from under the seat, forces the plunger onto the seat. When the coil is energized, the plunger is pulled upwards and allows flow between the P port and A and simultaneously closes the A to R channel.

The maximum pressure rating of the valve is dependent on the spring force and the orifice diameter.

Normally open variants use the upper port at the top of the coil as the pressure inlet, which leads to the advantage of the pivoted armature valves which have all ports in one plane.



Type 6012



Type 6014



Type 0355

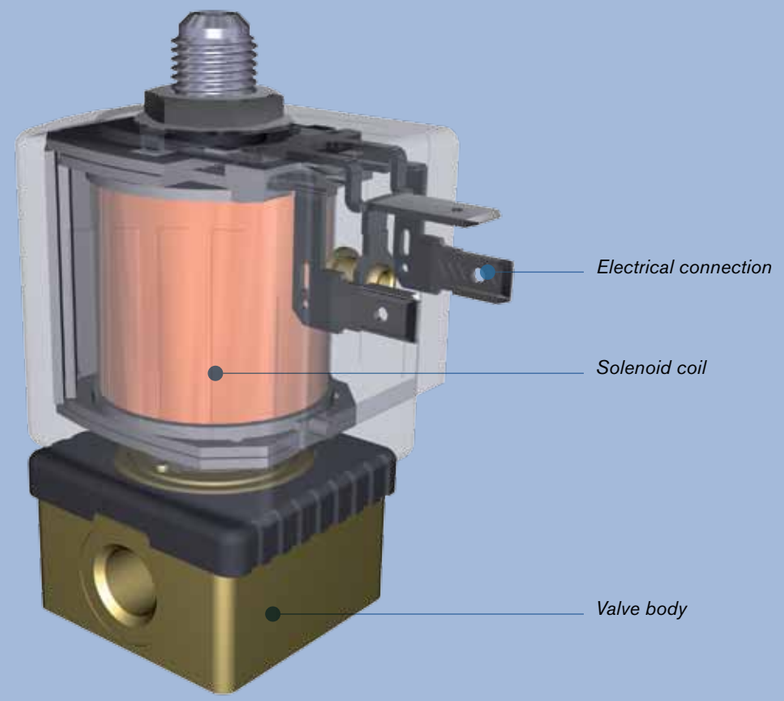

3/2-way plunger-type solenoid valve type 6014

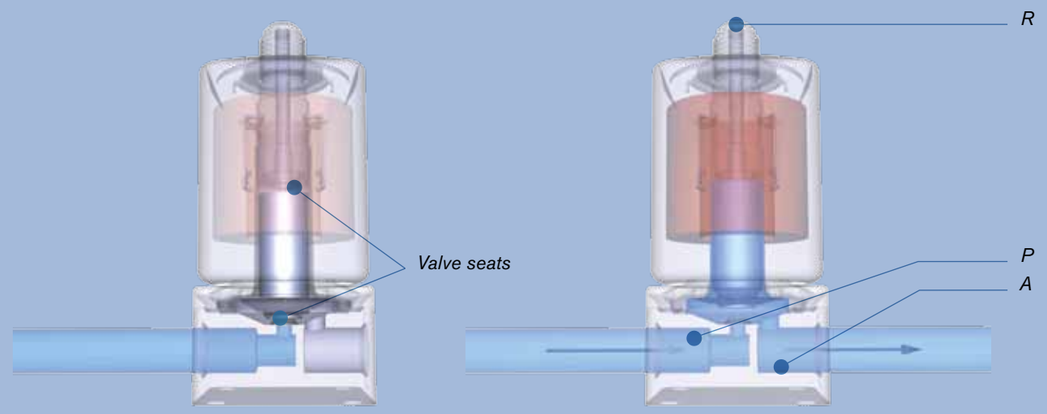

De-energized ***Energized***

You can find the 3D-animation of this functional schema in the PDF version of this brochure.

Direct Acting: Pivot

Pivoted armature valves offer excellent reliability, ease of use and long service life.

The valve is switched by the coil inducing a lateral/rotational movement of the core around a pivot in the base. The armature thus can seal against one of two horizontally arranged seats in the body cavity. In contrast to plunger style valves the pivoted armature allows the use of a media separating diaphragm which means these valves can be used for the control of corrosive, contaminated or aggressive fluids and vacuum.

They are easily manifold mounted and are available in both 2/2-way and 3/2-way version. Unlike the plunger valves, the 3/2-way version has all 3 ports in the same plane.

These valves are equipped with a lockable manual override and have the unique possibility to offer an electrical position feedback indicator.

They are globally certified in AC, DC and UC versions. They can be deployed in hazardous locations and are available in many different wetted part materials including stainless steel, brass, PVDF, and PP for bodies and FKM, EPDM, NBR and FFKM for the isolating diaphragms.



Typ 0124



Typ 0330



Typ 0121

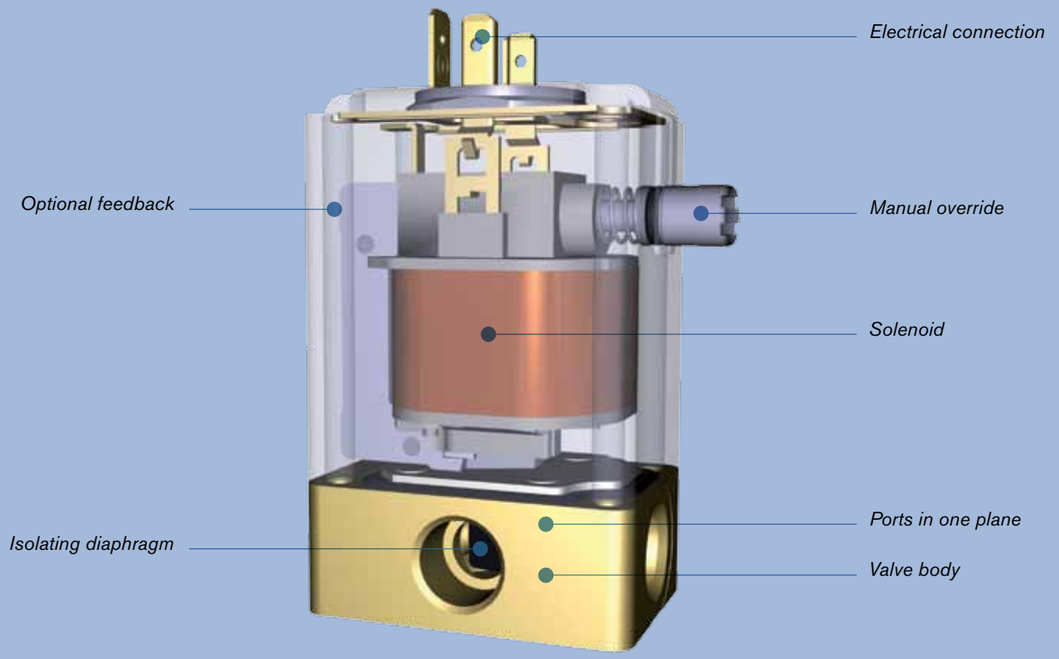

Pivoted armature valve type 0330

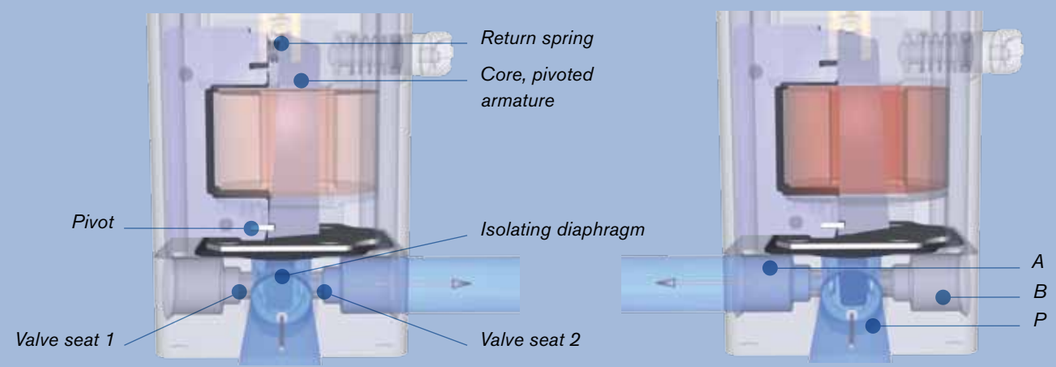

Divert Function de-energized

Divert Function energized

You can find the 3D-animation of this functional schema in the PDF version of this brochure.

Direct Acting: Rocker

Rocker armatures demonstrate extremely high cycle life and are constructed both with and without an isolating diaphragm.

In each case energy applied to the coil moves a horizontal, low mass rocker moves around a fulcrum between the seats with very little frictional consequences, sealing against one of two vertically oriented seats.

This operational concept works well for both 2/2-way and 3/2-way versions and the system also provides a reasonable amount of resistance to back-pressure. All ports are accommodated in the same plane in the valve body or in-line on a manifold.

Without the diaphragm the valves are used for the control of neutral gases and liquids and are frequently employed as a pilot for pneumatic valves in both hazardous and non-hazardous areas.

When a diaphragm is integrated into the design, to separate the mechanics of the valve from the fluid path, the valve can be used for agressive fluids and as such they are employed either as stand alone valves or as isolated pilots for larger servo assisted valves.

The rocker design with integrated diaphragm forms the basis of the MicroFluidic range where small dead volumes and flushability are of prime importance. Compact design and low heating effect from the small but efficient coil enhance the suitability for aggressive or ultra-pure media and this can be further enhanced by the use of impulse coils or by booster electronics.

These valves are available in AC, DC and UC voltages and are available with explosion protection Ex-i (intrinsically safe).



Type 6128



Type 0127



Type 6606

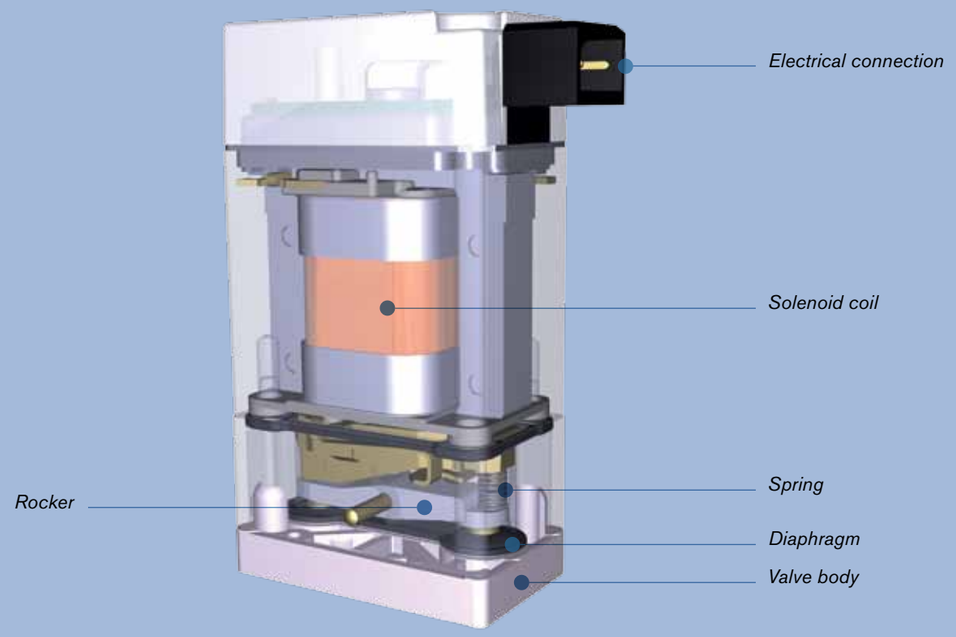

Direct acting 3/2-way rocker valve type 0127

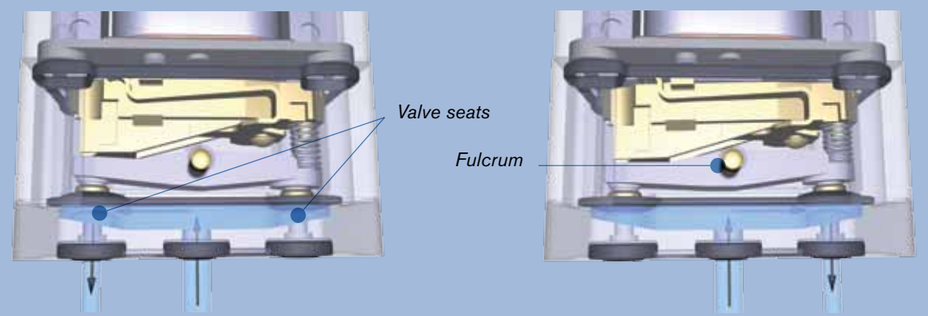

De-energized ***Energized***

You can find the 3D-animation of this functional schema in the PDF version of this brochure.

Direct Acting: Flipper

The flipper armature moves a high tech fully encapsulated flexible sealing system between two opposing seats.

Flipper valves demonstrate extremely high cycle life and are always constructed with an isolating diaphragm. The vertical armature has a permanent magnet, and a low mass flipper moves around a fulcrum below both seats with very little frictional consequences. This operational concept works well for both 2/2-way and 3/2-way versions and in both cases the ports are accommodated in the same plane in the valve body or in-line on a manifold.

The valves are often used for the repeatable control of neutral gases and liquids and are frequently employed as a pilot for pneumatic valves in both hazardous and non-hazardous areas.

Since a diaphragm is integrated into the design, to separate the mechanics of the valve from the fluid path, the valve can be used for aggressive fluids where small dead volumes and flushing is important. This operational principle can also be miniturized and leads to the opportunity to have valves which are only 4.5 mm wide. Compact design and low heating effect from the small but efficient coil enhance the suitability for aggressive or ultra-pure media.

Intrinsically safe versions of these valves fit in hazardous areas, and AC, DC and UC voltages are available.



Type 6144



Type 6650



Type 6604

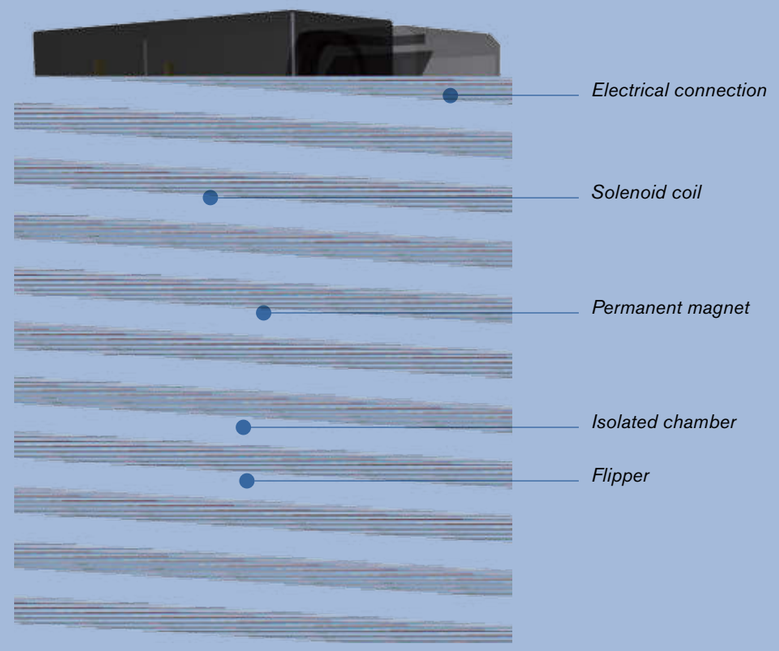

Direct acting 3/2-way flipper valve type 6144

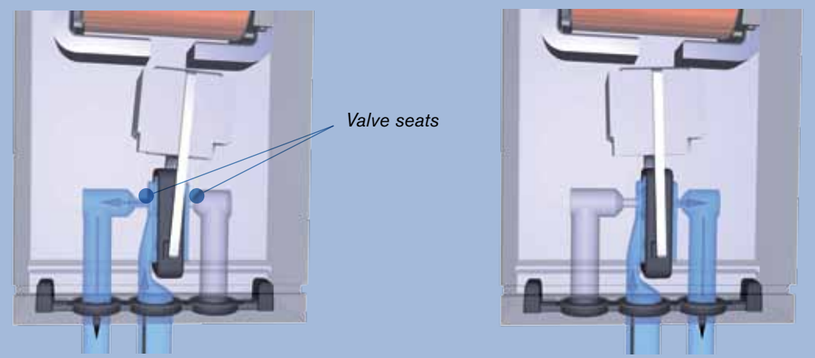

De-energized ***Energized***

You can find the 3D-animation of this functional schema in the PDF version of this brochure.

Servo Assisted Valve Anatomy

Pilot Valve
Pilots can use any of the direct acting principles (plunger, pivot, rocker or flipper) to provide either isolated or non-isolated actuation which, in turn, governs the applicability of the whole valve. The pilot armature can assist without physical connection to the main seal or can be mechanically connected with a spring or hard coupling method to aid further in the opening when there may not be enough differential pressure across the valve.

Chamber
Pressure is equalized in the chamber and is the space into which the diaphragm or piston recedes to allow flow.

Pilot channels
Allow fluid to move out of the chamber and from the pilot to downstream to enable the fluid to assist in opening the main seal.

Equalization hole/channel
Allows pressure to slowly equalize between the inlet and the chamber above the diaphragm or piston to seal the valve. This hole is replaced by a channel when an isolated 3/2 pilot is in place.

Above the seat flow
All servo assisted valves use above the seat flow and have very low back-pressure resistance.

Spring
The spring works with the fluid to revert the valve back to its normal position when the pilot valve sees no power. In valves which are subject to chemically aggressive fluids the spring is omitted allowing only the fluid to close the valve.

Main Orifice
The area on which the media pressure will act and the gap through which the media will flow when the valve is energized. Along with the contours of the valve it governs the pressure drop and the flow rate of the valve.

Fluidic Connection
Many fluidic sizes and connections are available to meet local geographic or industry specific standards.

Seal
A soft material, either a diaphragm or a flat seal attached to the underside of a solid piston or a plunger which halts the flow of fluid from one side of the main orifice to the other.

Seat
A raised area on the orifice which concentrates the pressure of the seal. In some cases the seat is made from a more abrasion resistant material than the body material.

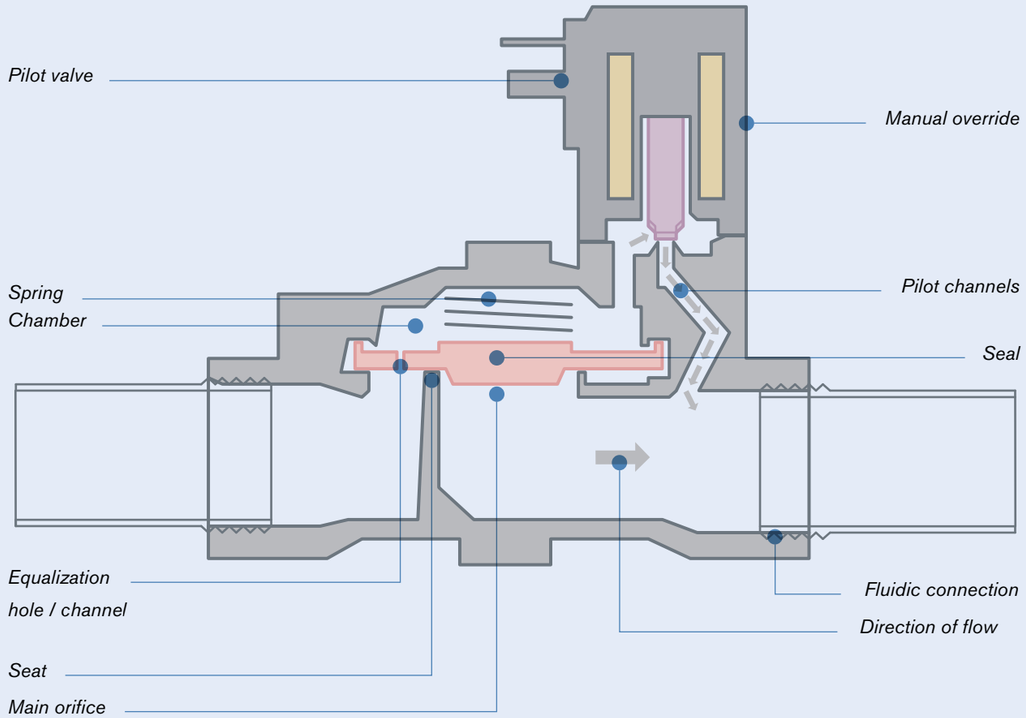

Opening large orifices using the direct acting method would require enormous and expensive coils. Therefore servo assisted valves use the power of the fluid to open the flow channel by controlling a small pilot channel to alter the forces on a larger main seal.

Servo Assisted: Diaphragm (Plunger Piloted)

This operating method uses a direct acting plunger valve as the pilot valve and the main valve seal is a flexible diaphragm.

The fluid chamber above the diaphragm is relieved when the pilot opens. The medium pressure beneath the diaphragm lifts the diaphragm and opens the valve allowing flow. When the pilot valve is closed, the medium pressure is allowed to build up again above the diaphragm through its small equalizing orifice and closing is aided by the force of the compression spring.

These valves require a minimum pressure differential to exist between the inlet port and the outlet port and are limited to controlling the same clean media as the non-isolated plunger pilot.

The chief application areas of these servo assisted diaphragm solenoid valves are in the DN 10 to 65 mm range for neutral liquids and gases.



Typ 6281EV



Typ 6228

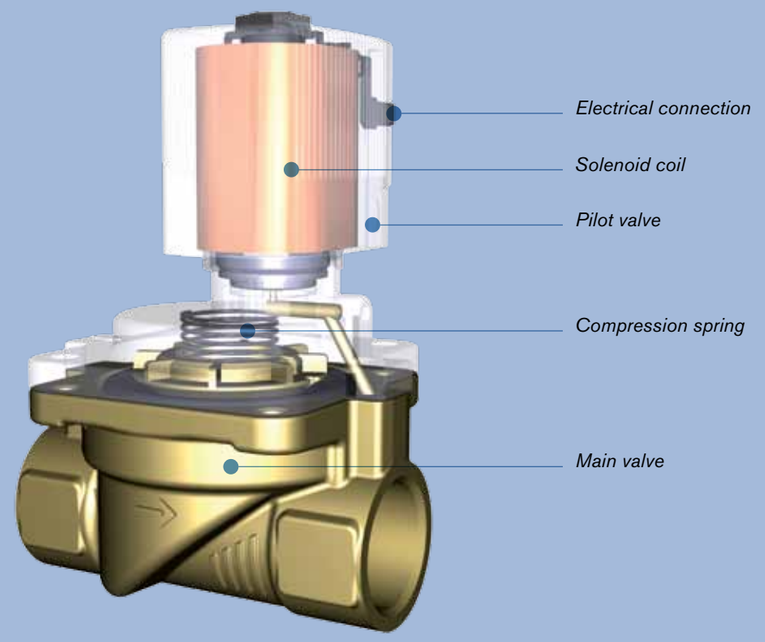

Servo assisted solenoid valve with diaphragm type 6281EV

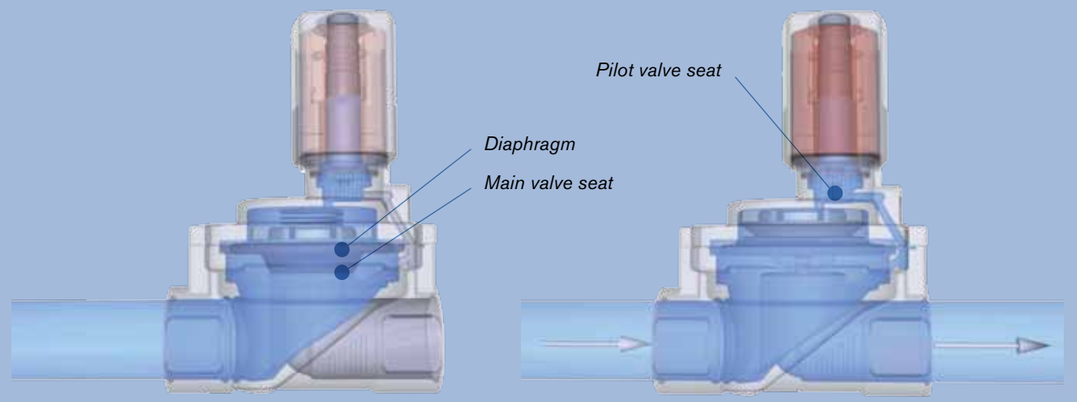

De-energized ***Energized***

You can find the 3D-animation of this functional schema in the PDF version of this brochure.

Servo Assisted: Piston (Plunger Piloted)

This operating method uses a direct acting plunger valve as the pilot valve and the main valve seal located on the base of a solid piston which moves vertically through a cylindrical chamber.

The fluid chamber above the piston is relieved when the pilot opens. The medium pressure beneath the piston lifts the piston and opens the valve allowing flow. When the pilot valve is closed, the medium pressure is allowed to build up again above the piston through the equalizing orifice in the piston body and closing is aided by the force of the compression spring.

These valves require a minimum pressure differential to exist between the inlet port and the outlet port and are limited to controlling the same clean media as the non-isolated plunger pilot.

The chief application area of these servo assisted piston solenoid valves are in the DN 10 to 65 mm range for reliable high cycling of compressed air, neutral gases and steam up to 180 °C.



Type 0406



Type 5404



Type 6221

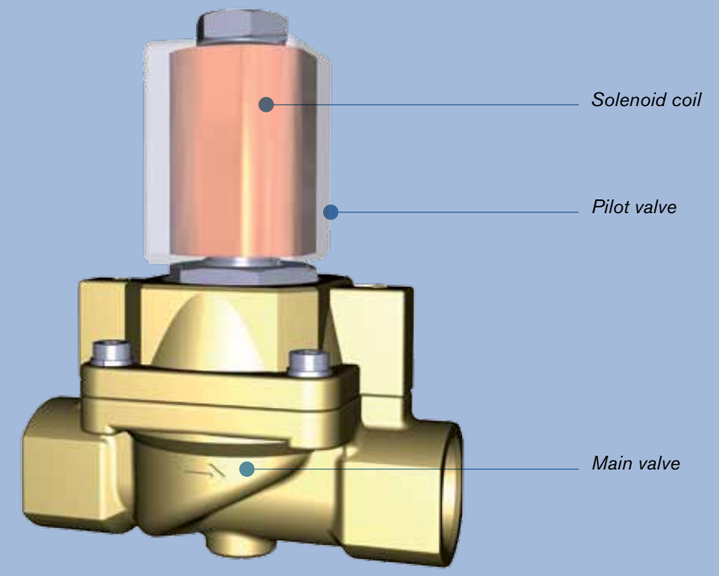

2/2-way servo assisted piston solenoid valve type 0406

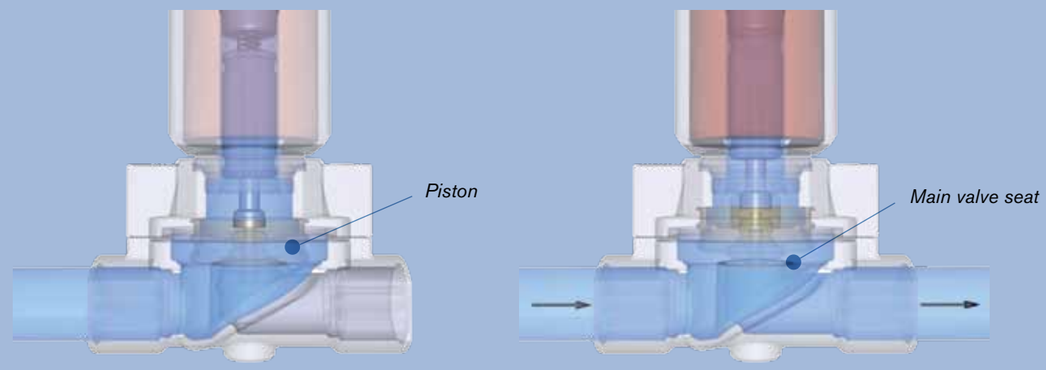

De-energized ***Energized***

You can find the 3D-animation of this functional schema in the PDF version of this brochure.

Servo Assisted: Diaphragm (Isolated Pilot)

This unique operating method uses one of the isolated direct acting 3/2-way valves (pivot or rocker) as the pilot valve while the main valve seal is a larger flexible diaphragm.

As with 2/2-way piloted valves, the fluid chamber above the piston is relieved when the pilot opens.

The medium pressure beneath the diaphragm lifts the diaphragm allowing flow. When the pilot valve is closed, the channel to the downstream is closed and the medium pressure is allowed to build up again in the chamber through the upstream pilot channel and closing is aided by the force of the compression spring. On some valves the speed of opening and closing can be adjusted to suit the application.

The absence of media equalizing holes in the diaphragm and the fact that no media flows through the pilot in its open switch position means there is a much lower risk of clogging due to contaminated media. Another advantage is that the valves can be changed from normally closed to normally open by simply reversing the pilot.

Because there is no physical connection between the pilot and the diaphragm, these valves require a minimum pressure differential to exist between the inlet port and the outlet port.

The chief application areas of these exceptional valves are in the DN 10 to 65 mm range for reliable switching of slightly contaminated and aggressive media.



Typ 5282



Typ 0142

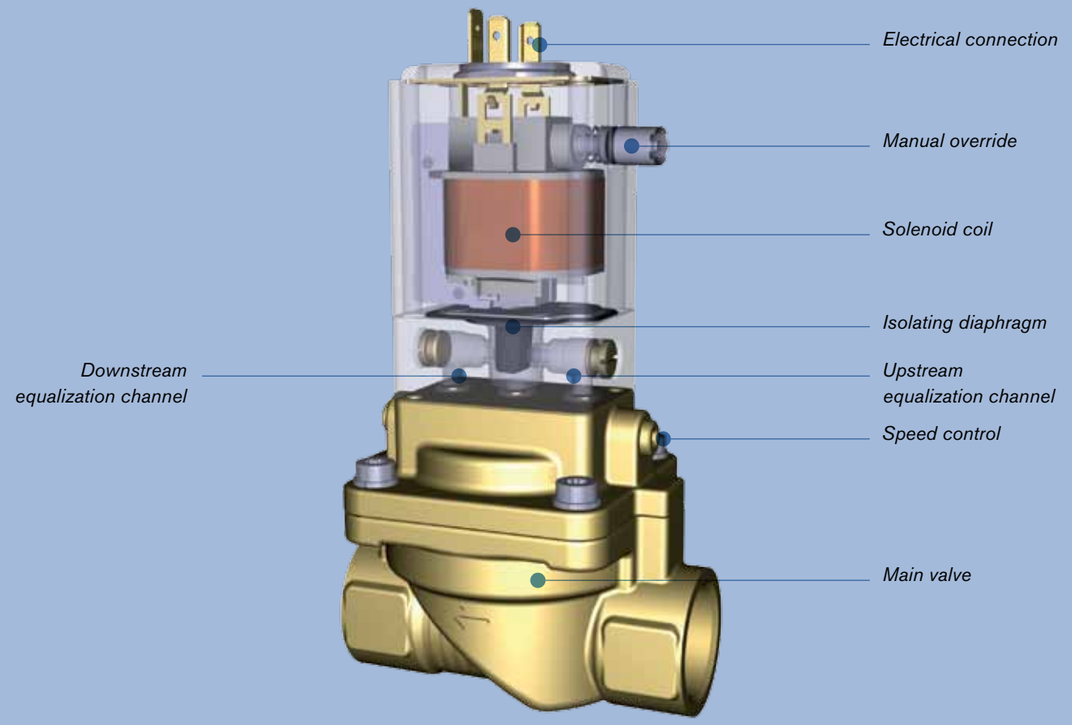

Servo assisted solenoid valve with 3/2-way pilot type 5282

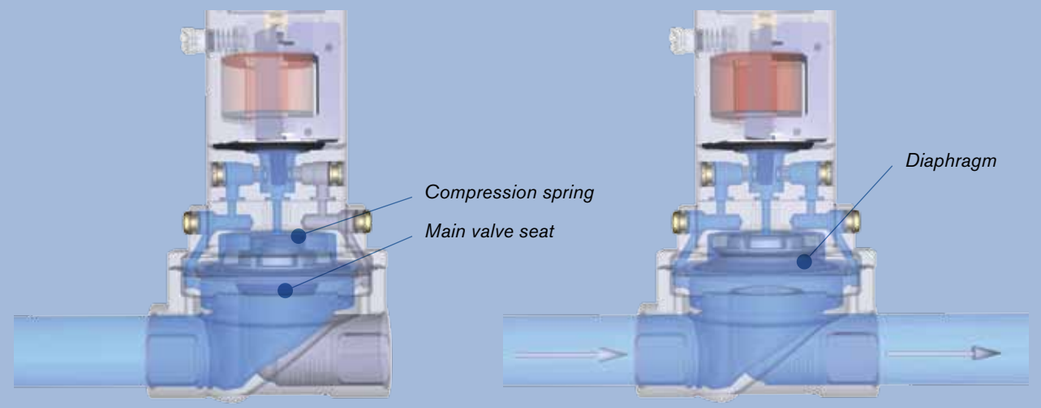

De-energized ***Energized***

You can find the 3D-animation of this functional schema in the PDF version of this brochure.

Servo Assisted: Spring Coupled

Like other servo assisted valves, these spring coupled valves take advantage of the fluid's pressure to operate. The addition of a direct soft mechanical coupling between the main diaphragm or piston and the plunger of the pilot armature means that there is some extra assistance.

This linkage is especially useful in the case of low pressure differentials, where the coupling allows the valve to start to open without differential.

As in the case of all servo assisted valves the pilot is responsible for opening the channel between the chamber and the downstream port allowing the pressure in the chamber to sink and thus the path can be opened for flow to occur through the main orifice. When the power to the pilot is removed the design also ensures slow, water-hammer free closing and tight shut-off.

The internal complexity, small pressure equalizing paths and media contacting springs mean these valves should only be employed for clean, neutral media.

The design means we can supply normally closed versions in a modular array of both stainless and brass compact bodies with all global approvals.



Type 6213EV

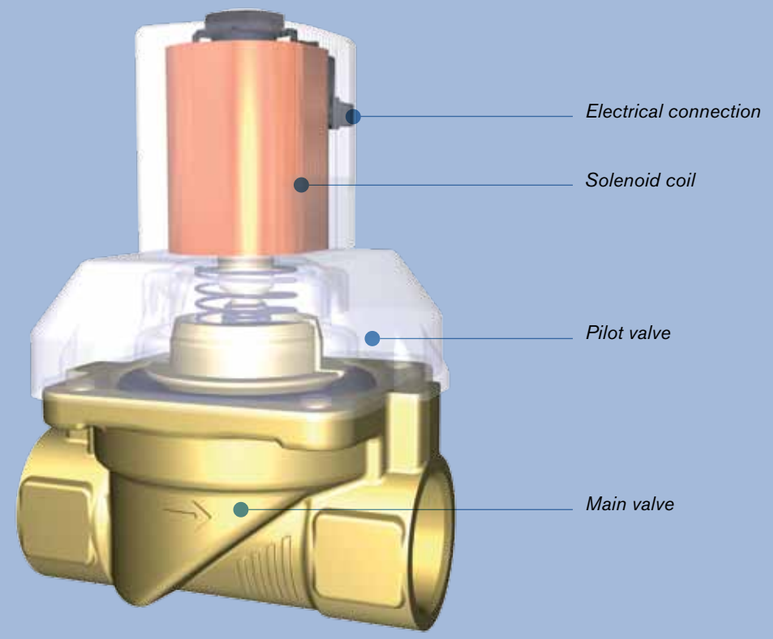

2/2-way spring coupled servo assisted solenoid valve type 6213EV

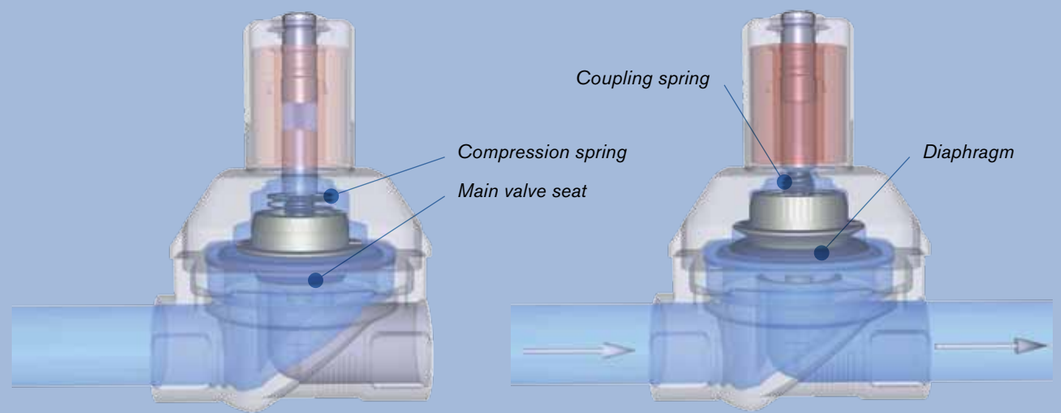

De-energized ***Energized***

You can find the 3D-animation of this functional schema in the PDF version of this brochure.

Servo Assisted: Hard Coupled

Like spring coupled valves, hard coupled valves can take advantage of the fluid's pressure to operate – but the addition of a direct and solid mechanical coupling between the main diaphragm or piston and the plunger of the pilot armature means that there is a much more dominant direct acting force component.

This direct and solid linkage can be employed where there is zero pressure differential as the strength of the coil acting on the coupling can open the main valve without aid.

When the power to the pilot is removed the design also ensures slow, water-hammer free closing and tight shut-off.

The internal complexity, small pressure equalizing paths and media contacting springs mean these valves should only be employed for clean, neutral media and steam.

The design means we can supply normally closed versions in a modular array of both stainless and brass compact bodies with all global approvals.



Type 6240



Type 0290



Type 0407

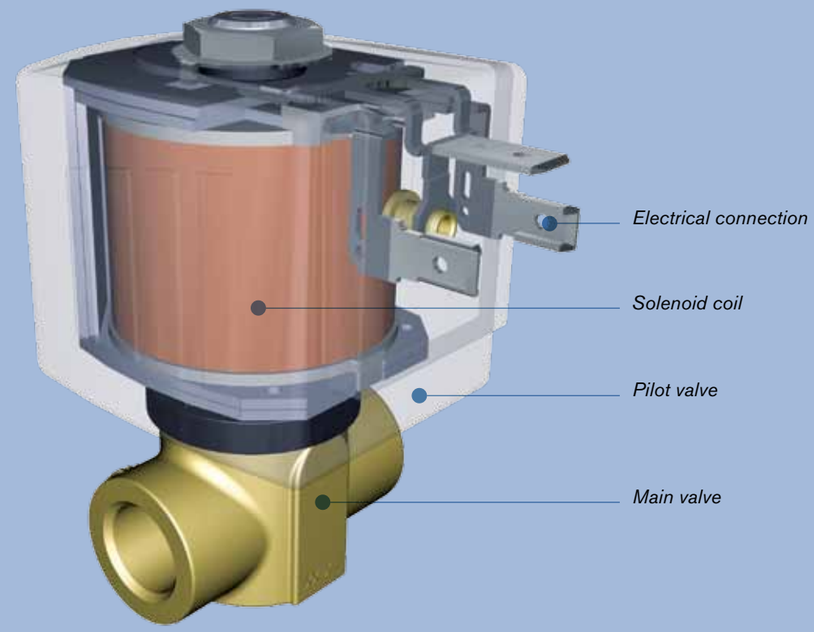

2/2-way hard coupled servo assisted solenoid valve type 6240

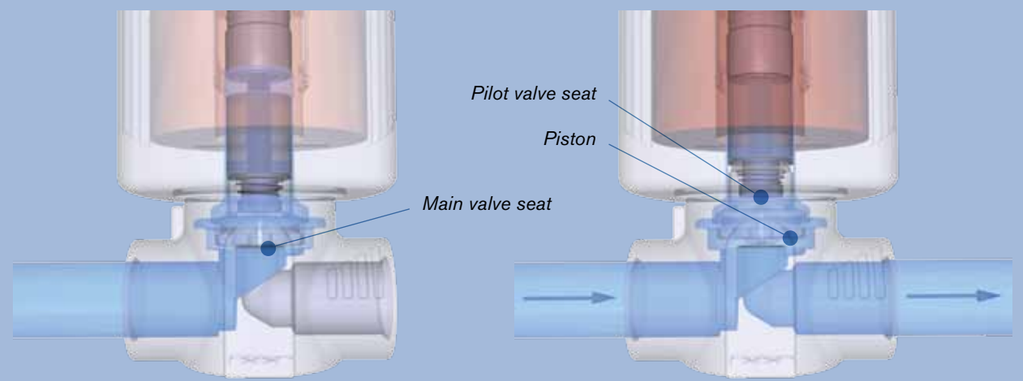

De-energized ***Energized***

You can find the 3D-animation of this functional schema in the PDF version of this brochure.

Materials of Construction

Bürkert boasts the most modern fully equipped material test facility in which you will find qualified people who have years of experience all directed towards you receiving the correct solenoid valves for your application. These tables are an excerpt from our chemical resistance booklet which is available on the web or from your local Bürkert contact person.

Metallic Materials	Code	General chemical resistance	Permissible temperatures		
			Neutral media long-term	Neutral media short-term	Aggressive media long-term
Metals for bodies					
Stainless steel		See resistance tables	-20 to +400 °C		-20 to +150 °C
	1.4401	Also 1.4404, 1.4408, 1.4409, 1.4401			
	1.4571	Also 1.4581			
	1.4305	Also 1.4301, 1.4303			
	1.4105	Also 1.4113			
Brass	MS	See resistance tables	-20 to +250 °C		
Red bronze	RG	See resistance tables	-20 to +250 °C		



Synthetic Materials	Code	General chemical resistance	Permissible temperatures		
			Neutral media long-term	Neutral media short-term	Aggressive media long-term
Polyvinyl chloride, rigid	PVC PVC-HT	Resistant to most acids and bases, salt solutions and water miscible, organic solvents. Non-resistant to aromatic and chlorinated hydrocarbons.	0 to +60 °C	0 to +60 °C	0 to +40 °C
			0 to +90 °C	0 to +110 °C	0 to +40 °C
Polypropylene Polyethylene	PP PE	Resistant to organic solvents, aqueous solutions of acids, bases and salts. Unsuitable for concentrated, oxidising acids.	0 to +100 °C		0 to +60 °C
Polyamide	PA	Resistant to fats, oils, waxes, fuels, weak bases, aliphatic and aromatic hydrocarbons.	0 to +100 °C		0 to +60 °C
Polytetrafluorethylene	PTFE	Resistant to nearly all chemicals. Unsuitable for liquid sodium and fluorine compounds.	-20 to +200 °C	-20 to +260 °C	-20 to +150 °C
Polyvinylidene fluoride	PVDF	Unsuitable for hot solvents as well as for ketones, esters, and strong bases.	-20 to +100 °C		
Polyphenyl sulfide	PPS	Resistant to dilute mineral acids, bases, aliphatic and aromatic hydrocarbons, ketones, alcohols, chlorinated hydrocarbons, oils, fats, water, and to hydrolysis.	to +200 °C	to +260 °C	
Polyetheretherketone	PEEK	Resistant to most chemicals. Unsuitable for concentrated sulfuric and nitric acid and certain chlorohydrocarbons.	to +220 °C	to +280 °C	
Ethylene propylen diene rubber	EPDM	Good resistance to ozone and weathering, particularly suitable for aggressive chemicals. Unsatisfactory for oils and fats.	-30 to +130 °C		Dependent on the aggressiveness of the medium and the mechanical load
Fluorine rubber FKM	FKM	Chemical properties superior to all other elastomers.	-10 to +150 °C	-10 to +200 °C	
Nitrite rubber	NBR	Fairly resistance to oil and petrol. Unsatisfactory for oxidizing fluids.	-10 to +90 °C	-10 to +120 °C	
Chloroprene rubber	CR	The chemical properties are very similar to those of PVC and lie between those of NBR and EPDM.	-10 to +100 °C	-10 to +110 °C	
Perfluorinated elastomers	FFKM	Similar to PTFE (dependent on blend)	+5 to +230 °C	+5 to +230 °C	
Polytetrafluorethylene	PTFE	See plastic housing materials			

Approvals Behind Our Success

Individual directives and national standards have resulted in clear standards that have been implemented in national or international law by the legislature. These recognized regulations ensure that equipment items from different countries are compatible and that manufacturers adhere to a set of regulations regarding design and production.

These regulations relate to the following aspects:
– Protection against risks and dangers
– Interfaces between technical systems
– Testing and inspections of products
– Clear description of the content and the characteristics of products

Legal supervisory authorities require that system operators use only equipment which meets the necessary safety requirements pursuant to these regulations.

Bürkert has the largest number of valves which have been granted the corresponding global approvals.

European approvals

The European approvals and CE mark must be considered in conjunction with one another. As products with CE marking comply with the specified safety regulations, these marked products must be accepted in all EU and EFTA states. A distinction is made between the regulated and unregulated area. The CE mark on Bürkert devices refers to
– Electromagnetic compatibility in the areas
– Low Voltage Directive with the following limits:
  75 – 1500 V for DC voltages
  50 – 1000 V for AC voltages
– Pressure Equipment Directive

In regulated areas, the requirement stipulates that an independent body must conduct an CE type examination.
– Pressure Equipment Directive
– Gas Appliances Directive
– ATEX Directive

In unregulated areas, it is the manufacturer's direct responsibility to attach the CE mark. In this case, a Declaration of Conformity may be required of the manufacturer, specifying the standards applied. Depending on the particular application, the following directives may apply to Bürkert:
– Low Voltage Directives
– Electromagnetic Compatibility Directive
– Vehicle Directives
– Medical Device Directives

German approvals

VDE approval applies to water valves for domestic use where the most important requirements are electrical safety requirements, stipulated function behavior, water hammer, tightness and mechanical strength of the fluidic components.

The KTW Recommendation is relevant to plastics in components used in drinking water and is also required for the use of solenoid valves with VDE approval in the drinking water sector. The hygiene requirement applies to non-metallic materials (e. g., elastomer seal materials) which come into contact with the medium and is taken as a basis for this recommendation in accordance with the specification of the competent Federal Agency.

Safety shut-off valve to EN 264 “Safety Shut-Off Devices for Combustion Plants using Liquid Fuels” is specified as the test regulation for this. A test laboratory (e. g., TÜV) draws up a report on the requirements which include functional behavior, continuous loading capability, electrical safety, tightness and mechanical strength of the fluidic components.

North American approvals

The American Occupational Safety and Health Administration (OSHA) drew up the OSHA Regulation. In Standard 29 CFR, the requirement for electrical installations or equipment stipulates that only installations or equipment which have been tested for the specified safety requirements by an NRTL (National Registered Test Laboratory) may be installed. The NRTLs specified include the following:
– Underwriters' Laboratories (UL) for UL-listed, UL-recognized, UL-classified
– Factory Mutual (FM)
– Canadian Standards Association (CSA)

The complete CSA approval, from the measurements to be carried out up to preparation of the documents can be conducted by Bürkert internally as we have achieved “Category Certification” status.

Hazardous Locations

Valves for ATEX Directives (formerly Explosion-Protection (EX) Directives) covers equipment, components and protection systems for use in hazardous areas. It also applies to safety facilities outside of hazardous areas if they are required for safe operation of equipment in the hazardous area with respect to the risk of explosion. Details can be found in our brochure Hazardous Locations.

Our Service Promise

We have made the investment to be close to you both geographically and in your market. We offer a comprehensive program of interlinking services which include:

Everything from one Partner
We have tens of thousand of process engineering products in our program. We know exactly how to program them, install them and combine them according to your wishes.

Customer Service around the Clock
We offer support through internet, telephone or people on the ground at your site. We are available around the clock.

Start-up
We are always available for installation and commissioning as well as for local staff and operator training.

Global Operations
We are close by in 35 countries in a network which guarantees the full achievement of our enterprise to each customer on each continent.

Application Selection Guide
So far in this brochure we have discussed the functional differences between solenoid valves. On the next 5 pages we can examine the basic applications of solenoid valves by media which will help to direct you towards more detailed technical information.

– Neutral Liquid Media (see page 38)
– Neutral Gaseous Media (see page 40)
– Aggressive Fluids (see page 42)
– Steam & High Pressure Fluids (see page 44)
– Ex (see Competence Brochure Hazardous Locations)
– Solenoid Control Valves (see Product Overview Solenoid Control Valves)

Please be assured that we are always available to help personally, really listening to your requirements with your success in mind. We are only content when your specific problem was solved.



Water and Neutral Liquids

■ *Standard*
□ *Optional*
MAN *Manifold mount*
VAC *Vacuum*

	Pressure Range [bar]																					Body Material			Seal Material				Connections
	VAC			≤1			≤2			≤3			≤5	≤8	≤10		≤16		≤20	≤25	≤30	≤100								
	Orifice [mm]																												
	0.4	0.6	0.8	1.2	1.6	2.0	2.4	2.5	3.0	4.0	5.0	6.0	8.0	10	12	13	20	25	32	40	50	65	Brass	SS	Plastic	NBR	EPDM	FKM	PTFE	
Function 2/2	Direct Acting Plunger																												
6011																							■	■			■	■		M5, 1/8, MAN
6013																							■	■			■	■	■	1/8 to 3/8, MAN
0255																							■	■		■	■	■	■	1/4 to 1/2
0256																							■	■		■	■	■	■	1/4 to 1/2
Function 2/2	Direct Acting Pivoted Armature																												
0330/1																							■	■	□	■	■	■		1/4 (MAN)
Function 2/2	Direct Acting Rocker																												
6126																									■		■	■		10/32, MAN
6128																									■			■		1/8, MAN
Function 2/2	Direct Acting Flipper																												
6124																									■			■		1/4 UNF, M3, MAN
Function 3/2	Direct Acting Plunger																												
6012																							■	■	■	■		■		M5, 1/8, MAN
6014																							■	■	■		□	■		1/8 to 3/8, MAN
Function 2/2	Servo Assisted Plunger																												
6227																									■	■	□	□		MAN
6228																									■	■	■	■		3/8 to 1/2
6281EV																							■	■		■	■	■		1/2 to 2 1/2
Function 2/2	Servo Assisted Isolated Pilot																												
5282																							■	■		■	■	■		1/2 to 2 1/2
Function 2/2	Servo Assisted Soft Coupled																												
6213EV																							■	■		■	■	■		1/2 to 2 1/2
Function 2/2	Servo Assisted Hard Coupled																												
0290																							■	■		■	■	■		1/2 to 2
6240																							■	■			□	■	■	1/2 to 2 1/2
Function 3/2	Servo Assisted Pivoted Armature																												
0340																							■			■				1/4 to 1 1/2

Neutral Gases

■ *Standard*
□ *Optional*
MAN *Manifold mount*
VAC *Vacuum*

Pressure Range [bar]																						Body Material			Seal Material				Connections
VAC			≤1			≤2			≤3			≤5		≤8		≤10		≤16		≤20		≤25	≤30		≤100					
Orifice [mm]																													
0.4	0.6	0.8	1.2	1.6	2.0	2.4	2.5	3.0	4.0	5.0	6.0	8.0	10	12	13	20	25	32	40	50	65	Brass	SS	Plastic	NBR	EPDM	FKM	PTFE	
Function 2/2			**Direct Acting Plunger**																										
6011			■																			■	■			■	■		M5, 1/8, MAN
6013			■																			■	■			■	■	■	1/8 to 3/8, MAN
0255			■																			■	■		■	■	■	■	1/4 to 1/2
0256			■																			■	■		■	■	■	■	1/4 to 1/2
Function 2/2			**Direct Acting Pivoted Armature**																										
0330/1			■																			■	■	□	■	■	■		1/4 (MAN)
Function 3/2			**Direct Acting Plunger**																										
6012			■																			■	■	■	■		■		M5, 1/8, MAN
6014			■																			■	■	■		□	■		1/8 to 3/8, MAN
Function 3/2			**Direct Acting Pivoted Armature**																										
0330/1			■																			■	■	□	■	□	■		1/4 (MAN)
Function 3/2			**Direct Acting Rocker**																										
6128			■																						■		■		1/8, MAN
6104			■																						■		■		MAN
6106			■																						■		■		MAN
Function 3/2			**Direct Acting Flipper**																										
6144			■																						■		■		MAN
Function 2/2			**Servo Assisted Plunger**																										
5282			■																			■			■				1/2 to 2 1/2
6221			■																			■			■				3/8 to 1
5404			■																			■			■		□	■	1/2 to 1
6281EV			■																			■	■		■	■	■		1/2 to 2 1/2
Function 2/2			**Servo Assisted Hard Coupled**																										
0290			■																			■	■		■	■	■		1/2 to 2
6240			■																			■	■			□	■	■	1/4 to 3/8
Function 3/2			**Servo Assisted Pivoted Armature**																										
0340			■																			■			■				1/4 to 1 1/2
0343			■																			■			■				1/4 to 1 1/2
0344			■																			■			■				1/4 to 1 1/2

Soiled and/or Chemically Aggressive Fluids

■ *Standard*
□ *Optional*
MAN *Manifold mount*
VAC *Vacuum*

	Pressure Range [bar]																Body Material								Seal Material					Connections
	VAC		≤1			≤2			≤3		≤4		≤5	≤10	≤12	≤16														
	Orifice [mm]																													
	0.4	0.6	0.8	1.2	1.6	2.0	2.4	2.5	3.0	4.0	5.0	6.0	8.0	10	12	15	50	PP	SS	PPS	ETFE	PVC	PVDF	PTFE	PEEK	NBR	EPDM	FKM	PTFE	FFKM	
Function 2/2	Direct Acting Plunger (isolated)																													
0117																				■					■				■	1/8, 1/4 UNF
Function 2/2	Direct Acting Pivoted Armature																													
0330/1																			■							■	□	■		□	1/4 (MAN)
Function 2/2	Direct Acting Rocker																													
6126																			■	■							■	■			10/32, MAN
0127																							■	■				■		■	1/8, 1/4 UNF, MAN
6128																				■					■		■	■			1/8, MAN
Function 2/2	Direct Acting Flipper																													
6124																				■					■			■			1/4 UNF, M3, MAN
Function 2/2	Direct Acting Pivoted Armature																													
0124/5																		■					■			□	■	■		□	1/4 (MAN)
0121																			■			■		■			□	■		■	1/4 to 3/8
0131																						■		□		■	■	■			3/8 to 3/4
Function 2/2	Servo Assisted Isolated Pilot																													
5282																			■								■	■		■	1/2, 2 1/2
6642																						■					■	■			3/8 to 1/2
0142																						■	■				■	■			Ø20 to Ø63
Function 3/2	Direct Acting Pivoted Armature																													
0124/5																		■					■			□	■	■		□	1/4 (MAN)

Steam and High Pressure

■ *Standard*
□ *Optional*
MAN *Manifold mount*
VAC *Vacuum*

Steam

Steam Pressure Range [bar] (pressure rating of the valve for other media may be higher)																			Body Material		Seal		Function			Connections
VAC	≤1																≤10	≤20								
Orifice [mm]																										
0.1	1.6	2.0	2.4	2.5	3.0	4.0	5.0	6.0	8.0	10	12	16	20	25	32	40	50	65	Brass	SS	PTFE	EPDM	A	B	C	
Function 2/2	**Direct Acting Plunger**																									
6013																			■			■	■			1/8 to 3/8, MAN
0255																			■		■		■			1/4 to 1/2
Function 3/2	**Direct Acting Plunger**																									
0335																			■	■	■				■	1/4
Function 2/2	**Servo Assisted Plunger**																									
0406																			■		■		■			1/2 to 1
Function 2/2	**Hard Coupled**																									
6240																			■		■		■			1/4 to 3/8
0407																			■		■		■			1/2 to 2

High Pressure

Pressure Range [bar]																					Body Material			Seal Material					Connections
VAC	≤1			≤16			≤20		≤25		≤30		≤50		≤100		≤200	≤250											
Orifice [mm]																													
0.4	0.6	1.0	1.2	1.6	2.0	2.4	2.5	3.0	4.0	5.0	6.0	8.0	10	12	13	20	25	32	40	50	Brass	SS	Plastic	FKM	PEEK	NBR	PCTFE	PTFE	
Function 2/2	**Direct Acting Plunger**																												
0255																					■	■						■	1/4 to 1/2
0256																					■	■		■		■			1/4 to 1/2
Function 2/2	**Servo Assisted Plunger**																												
2200																						■					■		1/4
5404																					■					■		■	1/2 to 1
2400																					■	■			■		■	■	1/4 to 1/2

Accessories

We make sure that we not only offer a solenoid valve but that we can provide a solution. A wide range of accessories certainly goes in that direction.

We provide an extremely wide assortment of electrical connections which include DIN plugs of each size, M8 and M12, automotive connectors, North American conduit connections, pre-wired leads, ASi plugs, plugs with LEDs, rectifiers and booster electronics.

When you are working with compressed air we can supply filters and various pneumatic fittings; if you want a little control we offer a range of multifunction timers, set by DIP switches, in all standard voltages and; if you want to group our components together we produce manifolds in every size, shape and material. We have the imagination and machining capability to meet your every manifold requirement.



Speciality Solenoid Valve Fields

We have deep information on solenoid valves used for pneumatic applications, microfluidic applications and as proportional control valves.

This is backed up by a market organization who are well-trained and able to help you in each of the specific areas.

Added to this is a wide range of process valves and sensors to meet your most demanding requirements. Read more in the Pneumatics & Process Interfaces, MicroFluidics and Solenoid Control Valves Product Overviews.









Added Value Systems

Bürkert has a unique perspective in the process control and instrumentation industry as we are the only single brand which combines a complete range of valves, instruments, pneumatic actuation, networking and controllers from a single source.

With our dedicated world-class engineers and our superlative manufacturing facilities we can deliver systems which meet your exact requirements.

Your reliable Bürkert sales consultant and our system engineers work in concert to ask the right questions and provide the right hardware. Transparent operations, up to date situation, review procedure, engineering change notices, portals through SAP and secure intranet are normal in our projects.

For a world class system experience, insist on Bürkert people to be part of your next project.



Connect

As a globally flexible, lean, focused and innovative company we are the partner of choice for fluid control systems in more than 35 countries. Whether you are in Stuttgart, Singapore, Chicago or Sydney, everywhere in the world, we are close to you and therefore know at first-hand about your specific tasks and problems.

Following our principle of “one face to the customer”, you have a competent, reliable consultant by your side at all times, who listens to your needs and presents a solution in your daily application language … crossing conventional boundaries and creating synergies between industries in pursuit of your ideal solution.

Systemhaus crews in Charlotte (USA), Suzhou (China), Dresden, Ingelfingen and Dortmund are continuously in innovation mode. They creatively engineer cost effective solutions to meet difficult process challenges for our customers.



Conceive & Innovate

Your project team starts working for you: from your reliable sales consultant, qualified industry specialists to dedicated system engineers – Bürkert puts the necessary experts together.

For the entire duration of the project they work together, combining their experience and clarifying all the requirements in close cooperation with you to come up with a feasible draft of your solution within the shortest timeframe.

CAD-created animations or simulations, combined with extended manufacturing, materials, tool design, construction and assembly knowledge enable us to provide a rough but firm production concept for your system at an early stage.



Plan & Specify

In Phase 3 the project is planned in detail. A specification sheet and refined solution concept are developed. This defines exactly what you expect from the system and what it must provide to ensure that all components meet your requirements.

At the end of this phase you are presented with a detailed product definition, a production specification and precise commercial conditions and agreements.

Structured project management based on open communication, effective coordination and thorough documentation ensures fast and reliable results.



Do & Check

Good communication, coordination and documentation at all project phases make sure that we are on the right track, developing the right solution, to allow us to quickly move on to prototyping.

Thanks to the latest technology, we are able to build a prototype made of metal or plastic or a functional model to test flow for example within 24 hours.

We provide you with samples; we perform tests and, of course, obtain all the necessary local and global approvals to make sure the system can go to production.

From here we work in concert with one of our production facilities in Ingelfingen, Gerabronn, Criesbach, Öhringen or Triembach according to their individual core manufacturing competencies.



Complete

Our work does not end with the perfect delivery of components and systems. We offer a comprehensive program to our global clients interlinking services ranging from maintenance and service contracts, operator training and integrated logistics.

Our customer service is available around the clock, offering support through internet, telephone or our qualified, experienced people at your site.

We aim to provide only the utmost in customer experience. Something you will tell your friends about.

Bürkert – Close to You

Europe

Austria
Bürkert-Contromatic G.m.b.H.
Diefenbachgasse 1-3
AT-1150 Wien
Tel: +43 (0)1-894 13 33
Fax: +43 (0)1-894 13 00
E-mail: info@buerkert.at

Belgium
Bürkert Contromatic BV
Minervum 7220
NL-4817 ZJ Breda / Netherlands
Tel: +32 (0) 3 325 89 00
Fax: +32 (0) 3 325 61 61
E-mail: info@burkert.nl

Czech Rep.
Bürkert-Contromatic G.m.b.H. organizacni slozka
Krenova 35
CZ-602 00 Brno
Tel: +420 543-25 25 05
Fax: +420 543-25 25 06
E-mail: obchod@burkert.cz

Denmark
Bürkert-Contromatic A/S
Hørkær 24
DK-2730 Herlev
Tel: +45 44-50 75 00
Fax: +45 44-50 75 75
E-mail: info.dk@burkert.com

Finland
Bürkert Oy
Atomitie 5
FI-00370 Helsinki
Tel: +358 (0)207 412 550
Fax: +358 (0)207 412 555
E-mail: sales.fi@burkert.com

France
BURKERT CONTROMATIC SAS
Rue du Giessen
FR-67220 Triembach au Val
Tel: +33 (0)388-58 91 11
Fax: +33 (0)388-57 20 08
E-mail: burkert.france@burkert.com

Germany
Ingelfingen – Sales Center
Bürkert GmbH & Co. KG
Christian-Bürkert-Straße 13-17
DE-74653 Ingelfingen
Tel: +49 (0)7940/10-91 111
Fax: +49 (0)7940/10-91 448
E-mail: info@buerkert.de

Berlin
Bürkert GmbH & Co. KG
Paradiesstraße 206 b
DE-12526 Berlin
Tel: +49 (0)30/679717-0
Fax: +49 (0)30/679717-66

Hannover
Bürkert GmbH & Co. KG
Rendsburger Straße 18
DE-30659 Hannover
Tel: +49 (0)511/90276-0
Fax: +49 (0)511/90276-66

Europe, continued

Dortmund
Bürkert GmbH & Co. KG
Holzener Straße 70
DE-58708 Menden
Tel: +49 (0)2373/9681-0
Fax: +49 (0)2373/9681-50

Frankfurt
Bürkert GmbH & Co. KG
Am Flugplatz 27
DE-63329 Egelsbach
Tel: +49 (0)6103/9414-0
Fax: +49 (0)6103/9414-66

Stuttgart
Bürkert GmbH & Co. KG
Ulmer Straße 4
DE-70771 Leinfelden-Echterdingen
Tel: +49 (0)711/45110-0
Fax: +49 (0)711/45110-66

München
Bürkert GmbH & Co. KG
Elsenheimerstraße 47
DE-80687 München
Tel: +49 (0)89/829228-0
Fax: +49 (0)89/829228-50

Italy
Bürkert Contromatic Italiana S.p.A.
Centro Direzionale „Colombirolo“
Via Roma, 74
IT-20060 Cassina De' Pecchi (Mi)
Tel: +39 02-959 071
Fax: +39 02-959 07 251
E-mail: info@buerkert.it

Netherlands
Bürkert Contromatic BV
Minervum 7220
NL-4817 ZJ Breda
Tel: +31 (0) 88 12 67 300
Fax: +31 (0) 88 12 67 350
E-mail: info@burkert.nl

Norway
Bürkert-Contromatic A/S
Hvamstubben 17
NO-2013 Skjetten
Tel: +47 63-84 44 10
Fax: +47 63-84 44 55
E-mail: info@burkert.no

Poland
Burkert-Contromatic GmbH Oddzial w Polsce
Bernardynska street 14 a
PL-02-904 Warszawa
Tel: +48 (0)22-840 60 10
Fax: +48 (0)22-840 60 11
E-mail: buerkert@buerkert.pl

Portugal
Tel: +351 212 898 275
Fax: +351 212 898 276
E-mail: portugal@burkert.com

Spain
Bürkert Contromatic S.A.
Avda. Barcelona, 40
ES-08970 Sant Joan Despi, Barcelona
Tel: +34 93-477 79 80
Fax: +34 93-477 79 81
E-mail: spain@burkert.com

Europe, continued

Sweden
Bürkert-Contromatic AB
Kattsundsgatan 27
SE-211 26 Malmö
Tel: +46 (0)40-664 51 00
Fax: +46 (0)40-664 51 01
E-mail: info.se@burkert.com

Switzerland
Bürkert-Contromatic AG Schweiz
Bösch 71
CH-6331 Hünenberg ZG
Tel: +41 (0)41-785 66 66
Fax: +41 (0)41-785 66 33
E-mail: info.ch@burkert.com

Turkey
Burkert Contromatic Akiskan Kontrol Sistemleri Ticaret A.S.
1203/8 Sok. No2-E
TR-Yenisehir, Izmir
Tel: +90 (0)232-459 53 95
Fax: +90 (0)232-459 76 94
E-mail: infoturkey@burkert.com

United Kingdom
Burkert Contromatic Limited
Brimscombe Port Business Park
Brimscombe, Stroud
Glos, GL5 2QQ / UNITED KINGDOM
Tel: +44 (0)1453-731 353
Fax: +44 (0)1453-731 343
E-mail: sales.uk@burkert.com

Africa

South Africa
Bürkert Contromatic (Proprietary) Limited
233 Albert Amon Road
Millennium Business Park
Meadowdale,
Germiston
(Postal: P.O. Box 26260, East Rand 1462)
SOUTH AFRICA
Tel: +27 (0)11-574 60 00
Fax: +27 (0)11-454 14 77
E-mail: sales.za@burkert.com

Middle East

Bürkert-Contromatic AG,
International Middle East (RAKFTZ Branch)
PO Box 17015, RAK Free Trade Zone
Ras Al Khaimah
United Arab Emirates
Tel: +971 7207 6696
Fax: +971 7207 6695
E-mail: sales@burkert.com

Asia

China
Burkert Contromatic (Suzhou) Co. Ltd.
Systemhaus
Building No. 5, No.128 Fangzhou Road
SIP Suzhou P.R. CHINA, 215024
Tel: +86 0512 6265 9230
Fax: +86 0512 6265 9773

Burkert Contromatic (Shanghai), Co., Ltd.
(logistic and warehouse for BC China)
Floor 2, block 6, 166 Mingdong Road
Pudong New District
Shanghai 201209, P.R. CHINA
Tel: +86 21-5863 9990
Fax: +86 21-5863 9968
E-mail: info.chn@burkert.com

Beijing
Burkert Contromatic (Shanghai), Co., Ltd.
Room A 1708, Luowa Building, No.203
Er Qu Lizezhongyuan, Wangjing,
Chaoyang District
Beijing P.R. CHINA, 100102
Tel: +86 10 6439 9783, 6439 9793
Fax: +86 10 6439 9612

Chengdu
Burkert Contromatic (Shanghai), Co., Ltd.
B zone, 2nd floor,
DongFangGuangYi office building
33, Hua Tai Road
LongTan city industrial zone, 2nd section,
East 3rd ring Rd.
Chengdu, CHINA 610051
Tel: +86 28 8425 1434, 8425 1435
Fax: +86 28 8425 1560

Guangzhou
Burkert Contromatic (Shanghai), Co., Ltd.
4F-1, Block B, No.1 Innovation Building
No.63 Chuang Qi Road
Shilou Town, Panyu District
Guangzhou P.R. CHINA, 511447
Tel: +86 20 3927 0268, 3927 0260
Fax: +86 20 3927 0269

Shanghai
Burkert Contromatic (Shanghai), Co., Ltd.
Room 501/502 Xin Gai Nian Mansion
No.39 Wu Zhong Road
Shanghai P.R. CHINA, 200233
Tel: +86 21 6486 5110
Fax: +86 21 6487 4815

Suzhou
Burkert Contromatic (Shanghai), Co., Ltd.
Unit 11-12, 5th Floor, Block A
No.5 Xinghan Street
SIP Suzhou P.R. CHINA, 215021
Tel: +86-512-6265 9881
Fax: +86-512-6265 9882

Hong Kong
Burkert Contromatic (China/HK) Limited
Unit K, 9/Floor, Kwai Shun Industrial Centre
No. 51-63 Container Port Road
Kwai Chung, N.T., HONG KONG
Tel: +852 2480 1202
Fax: +852 2418 1945
E-mail: info.hkg@burkert.com

India
Burkert Contromatic PVT Ltd
No M6, Dr Vikram Sarabhai Instronic (VSI) Estate,
Type II, Thiruvanmyur
Chennai 600 041, INDIA
Tel: +91 (0)44-2454 0100
Fax: +91 (0)44-2454 0099
E-mail: sales.in@burkert.com

For up-to-date addresses please visit us at
www.burkert.com.

Asia, continued

Japan
Burkert Ltd.
1-12-15, Suidou, Bunkyo-ku
Tokyo 112-0005, JAPAN
Tel: +81 (0)3-5804-5020
Fax: +81 (0)3-5804-5021
E-mail: info.jpn@burkert.com

Korea
Burkert Contromatic Korea Co., Ltd.
C-401, Micro Office Bldg. 554-2
Gasan-Dong, Keumcheon-Gu
Seoul 153-803, KOREA
Tel: +82 (0)2-3462 5592
Fax: +82 (0)2-3462 5594
E-mail: info.kor@burkert.com

Malaysia
Burkert Contromatic Singapore Pte Ltd
2F-1, Tingkat Kenari 6
Sungai Ara
11960 Penang, MALAYSIA
Tel: +60 (0)4-643 5008
Fax: +60 (0)4-643 7010
E-mail: info.sin@burkert.com

Philippines
Burkert Contromatic Philippines, Inc.
8467 West Service Road, Km. 14, Sunvalley
South Superhighway, Parañaque City, 1700
Metro Manila, PHILIPPINES
Tel: +63 (0)2-7766071 / 7764384
Fax: +63 (0)2-7764382
E-mail: info.rp@burkert.com

Singapore
Burkert Contromatic Singapore Pte Ltd
51 Ubi Avenue 1, #03-14
Paya Ubi Industrial Park
Singapore 408933, SINGAPORE
Tel: +65 6844 2233
Fax: +65 6844 3532
E-mail: info.sin@burkert.com

Taiwan
Burkert Contromatic Taiwan Ltd.
9 F, No. 32, Chenggong Road, Sec. 1,
Nangang District
Taipei, TAIWAN 115, R.O.C.
Tel: +886 (0)2-2653 7868
Fax: +886 (0)2-2653 7968
E-mail: info.rc@burkert.com

Pacific

Australia
Bürkert Contromatic Australia Pty Ltd
Tel: 1300 888 868
Fax: 1300 888 076
E-mail: sales.au@burkert.com

Bürkert Sydney
15 Columbia Way
Norwest Business Park
Baulkham Hills NSW 2153

Bürkert Melbourne
Suite 49, UniPark
Building 4, 195 Wellington Road
Clayton VIC 3168

Bürkert Brisbane
Unit 1, 88 Brandl Street
Brisbane Technology Park
Eight Mile Plains QLD 4113

Bürkert Perth
Unit 8, 1st Floor
85 Reid Promenade
Joondalup WA 6027

Pacific, continued

South Australia
Innovation House
First Avenue
Mawson Lakes SA 5095

New Zealand
Bürkert Contromatic New Zealand Ltd
Tel: 0800 BURKERT
Fax: 0800 33 33 77
E-mail: sales.nz@burkert.com

Bürkert Auckland
44 Rennie Drive
Airport Oaks, Auckland 2022

NAFTA

Canada
Burlington Headquarters
Bürkert Contromatic Inc.
5002 South Service Road
Burlington, Ontario L7L 5Y7, CANADA
Tel: +1 905-632 30 33
Fax: +1 905-632 38 33
E-mail: sales.ca@burkert.com

Montreal Sales Center
Bürkert Contromatic Inc.
8104 Trans Canada Highway
St. Laurent, Quebec H4S 1M5 , CANADA
Tel: +1 514-336 9033
Fax: +1 514-336 9034

USA
Charlotte Headquarters
Bürkert Contromatic Corp.
2915 Whitehall Park Drive, Suite 650
Charlotte, NC 28273 , USA
Tel: +1 800-325 1405
Fax: +1 949-223 3198
E-mail: marketing-usa@burkert.com

West Coast Sales Facility
2572 White Road
Irvine, CA 92614 , USA
Tel: +1 800-325 1405
Fax: +1 949-223 3198

Charlotte Systemhaus
2915 Whitehall Park Drive, Suite 100
Charlotte, NC 28273 , USA
Tel: +1 800-325 1405
Fax: +1 949-223 3198

Engineering Division
2915 Whitehall Park Drive, Suite 200
Charlotte, NC 28273 , USA
Tel: +1 800-325 1405
Fax: +1 949-223 3198

Latin America

Argentina
Bürkert-Contromatic Argentina S.A.
Uruguay 2602, Centro Uruguay Norte,
P.B. Oficina 1, (B1643EKP) Beccar,
Pcia. de Buenos Aires, ARGENTINA
Tel: +54 (0)11-5648-6350
Fax: +54 (0)11-5648-6355
E-mail: contacto.argentina@burkert.com

Brazil
Bürkert-Contromatic Brasil Ltda.
Rua Américo Brasiliense, 2069
Chacara Santo Antônio
04715-005 São Paulo - SP BRAZIL
Tel: +55 (0)11-2186 1155
Fax: +55 (0)11-2186 1165
E-mail: pedidos.brasil@burkert.com

Credits: © and concept: Christian Bürkert GmbH & Co. KG | Realization: WOLF, Berlin | Photography: Munch Lichtbildnerei, Stuttgart; Studio Flamisch, Düsseldorf | 3D-Drawings: 3D Sales Technologies GmbH. All people shown are employees at Bürkert. Thank you for your support (and spirit).