

PSEN cs4.1p/M12

PILZ
THE SPIRIT OF SAFETY

- PSEN sensor technology

Operating Manual-1003293-EN-08

This document is the original document.

All rights to this documentation are reserved by Pilz GmbH & Co. KG. Copies may be made for the user's internal purposes. Suggestions and comments for improving this documentation will be gratefully received.

Source code from third-party manufacturers or open source software has been used for some components. The relevant licence information is available on the Internet on the Pilz homepage.

Pilz®, PIT®, PMI®, PNOZ®, Primo®, PSEN®, PSS®, PVIS®, SafetyBUS p®, SafetyEYE®, SafetyNET p®, the spirit of safety® are registered and protected trademarks of Pilz GmbH & Co. KG in some countries.


SD means Secure Digital

Introduction **5**
Validity of documentation 5
Using the documentation 5
Definition of symbols 5

Safety **6**
Intended use 6
Safety regulations 7
Safety assessment 7
Additional documents that apply 7
Use of qualified personnel 7
Warranty and liability 8
Disposal 8
For your safety 8

Unit features **9**

Function description **10**
Safety Device Diagnostics 11
Operating distances 12
Lateral and vertical offset 12

Wiring **13**
Terminal assignment connectors 14

Connection to evaluation devices **14**
Single connection 15
Series connection 17
Connection to Pilz evaluation devices 20

Teaching in the actuator **21**

Installation **22**

Adjustment **25**

Operation **25**

Dimensions in mm **26**
Safety switch PSEN cs4.1p 26
Safety switch PSEN cs4.1 M12/8-0.15m 27
Actuator 27

Technical details safety switch **28**

Technical details actuator **32**

Safety characteristic data **33**

Supplementary data **34**
Radio approval 34

Order reference **34**
Safety switch 34
Actuator 34
Complete systems 34
Accessories 35

EC declaration of conformity **37**

Introduction

Validity of documentation

This documentation is valid for the product PSEN cs4.1p/M12 from Version 2.0.

This operating manual explains the function and operation, describes the installation and provides guidelines on how to connect the product.

Using the documentation

This document is intended for instruction. Only install and commission the product if you have read and understood this document. The document should be retained for future reference.

Definition of symbols

Information that is particularly important is identified as follows:



DANGER!

This warning must be heeded! It warns of a hazardous situation that poses an immediate threat of serious injury and death and indicates preventive measures that can be taken.



WARNING!

This warning must be heeded! It warns of a hazardous situation that could lead to serious injury and death and indicates preventive measures that can be taken.



CAUTION!

This refers to a hazard that can lead to a less serious or minor injury plus material damage, and also provides information on preventive measures that can be taken.



NOTICE

This describes a situation in which the product or devices could be damaged and also provides information on preventive measures that can be taken. It also highlights areas within the text that are of particular importance.

INFORMATION

This gives advice on applications and provides information on special features.

Safety

Intended use

The safety functions of the safety switch are:

- Safe shutdown of safety outputs when the actuator is removed beyond the assured release distance s_{ar} or when the actuator is not detected
- Remain shut down safely after the actuator has been removed

The safety switch meets the requirements in accordance with:

- EN 60947-5-3: PDDB with one of the approved actuators
- EN 62061: SIL CL 3
- EN ISO 13849-1: PL e (Cat. 4)
- EN ISO 14119: Coding level High, type 4

The safety switch may only be used with one of the approved actuators.

The following combinations from safety switch and actuators are permitted:

Safety switch	Approved actuators
PSEN cs4.1 M12/8-0.15m	PSEN cs4.1 PSEN cs2.1
PSEN cs4.1p	PSEN cs4.1 PSEN cs2.1

The safety level PL e (Cat. 4)/SIL CL 3 is only achieved if

- the safety outputs use 2-channel processing.

The following is deemed improper use in particular

- Any component, technical or electrical modification to the product,
- Use of the product outside the areas described in this manual,
- Use of the product outside the technical details (see Technical details [28]).

NOTICE

EMC-compliant electrical installation

The product is designed for use in an industrial environment. The product may cause interference if installed in other environments. If installed in other environments, measures should be taken to comply with the applicable standards and directives for the respective installation site with regard to interference.

Safety regulations

Safety assessment

Before using a device it is necessary to perform a safety assessment in accordance with the Machinery Directive.

Functional safety is guaranteed for the product as a single component. However, this does not guarantee the functional safety of the overall plant/machine. In order to achieve the required safety level for the overall plant/machine, define the safety requirements for the plant/machine and then define how these must be implemented from a technical and organisational standpoint.

Additional documents that apply

Please read and take note of the following documents.

Only for use of the Safety Device Diagnostics (SDD):

- Operating manual for the fieldbus module, for example SDD ES ETH or SDD ES PROFIBUS
- System description "Safety Device Diagnostics"

For the use of passive junctions:

- Operating manual of a passive junction, for example:
  - PSEN ix2 F4 code
  - PSEN ix2 F8 code
  - PDP67 F 4 code
  - PSEN Y junction M12 sensor
  - PSEN Y junction M12 cable

You will need to be conversant with the information in these documents in order to fully understand this operating manual.

Use of qualified personnel

The products may only be assembled, installed, programmed, commissioned, operated, maintained and decommissioned by competent persons.

A competent person is a qualified and knowledgeable person who, because of their training, experience and current professional activity, has the specialist knowledge required. To be able to inspect, assess and operate devices, systems and machines, the person has to be informed of the state of the art and the applicable national, European and international laws, directives and standards.

It is the company’s responsibility only to employ personnel who

- Are familiar with the basic regulations concerning health and safety / accident prevention,
- Have read and understood the information provided in the section entitled Safety
- Have a good knowledge of the generic and specialist standards applicable to the specific application.

Warranty and liability

All claims to warranty and liability will be rendered invalid if

- The product was used contrary to the purpose for which it is intended,
- Damage can be attributed to not having followed the guidelines in the manual,
- Operating personnel are not suitably qualified,
- Any type of modification has been made (e.g. exchanging components on the PCB boards, soldering work etc.).

Disposal

- In safety-related applications, please comply with the mission time T_M in the safety-related characteristic data.
- When decommissioning, please comply with local regulations regarding the disposal of electronic devices (e.g. Electrical and Electronic Equipment Act).

For your safety



WARNING!

Loss of safety function due to manipulation of the interlocking device

Manipulation of the interlocking device may lead to serious injury and death.

- You should prevent any possibility of the interlocking device being manipulated through the use of a spare actuator.
- Keep the substitute actuator in a safe place and protect it from unauthorised access.
- If spare actuators are used, these must be installed as described in Installation [📖 22].
- If the original actuators are replaced with substitute actuators, the original actuators must be destroyed before disposal.

- Do not remove the connector's protective cap until you are just about to connect the unit. This will prevent potential contamination.
- Switch off the supply voltage before disconnecting the plug-in connection.
- Make sure that when connecting or separating the connector the pollution degree 1 or 2 is maintained.
- The connector should be protected from accidental loosening (e.g. using a cable tie).

Unit features

- Transponder technology for presence detection
- Pilz coding type: fully coded
- Dual-channel operation
- 2 safety inputs for series connection of multiple safety switches
- 2 safety outputs
- Safety Device Diagnostics (SDD)
  - Safety Device Diagnostics can be used to poll sensor information, to perform actions and to read configuration parameters
  - Manipulation protection in accordance with ISO 14119 (chap. 7.2.d) is possible by verifying the short name of the actuator through the controller via SDD communication
- Diagnostic input for Y1 for Safety Device Diagnostics (SDD)
- Signal output/diagnostic output Y32 for Safety Device Diagnostics
- LED display for:
  - State of the actuator
  - State of the inputs
  - Supply voltage/fault
- 1 direction of actuation
- Connection types:
  - PSEN cs4.1p: 8-pin M8 male connector
  - PSEN cs4.1 M12/8-0.15m: 8-pin M12 male connector

Function description

The safety outputs may have a high or low signal, depending on the position of the actuator and the signal status of the inputs.

In a safe condition the safety outputs are in the OFF state.

Electrical states of the inputs and outputs (when switch is ready for operation: Power/Fault LED is green):

Actuator in the response range	Safety input S11	Safety input S21	Safety output 12	Safety output 22	Signal output Y32 (without use of the SDD)
Yes	High	High	High	High	High
Yes	Low	Low	Low	Low	High
No	x	x	Low	Low	Low
Yes	High	Low	High	Low	High
Yes	Low	High	Low	High	High

x: High or low signal

Feasibility monitoring for safety inputs S11 and S21

- If one safety input switches from high to low, while the other safety input remains high, an unequal status is displayed: **Input LED flashes yellow**
- If this safety input switches back from low to high, while the other safety input remains high, a feasibility error is displayed and a partial operation lock is triggered: **Input LED flashes yellow**

A switch to a high signal will only lead to normal switch operation if both inputs had a low signal. From this moment on, the switch to high may occur (partial operation lock see Error display [📖 25]).

- Diagnostic input Y1

  If a fieldbus module of the SDD is used, the diagnostic input Y1 is automatically activated and data is read.

  If no fieldbus module of the SDD is used, the diagnostic input Y1 is not used.

- Signal output/diagnostic output Y32

  The status of the actuator is output. If a fieldbus module of the SDD is used, the signal output/diagnostic output for the writing of data is activated.

Block diagram

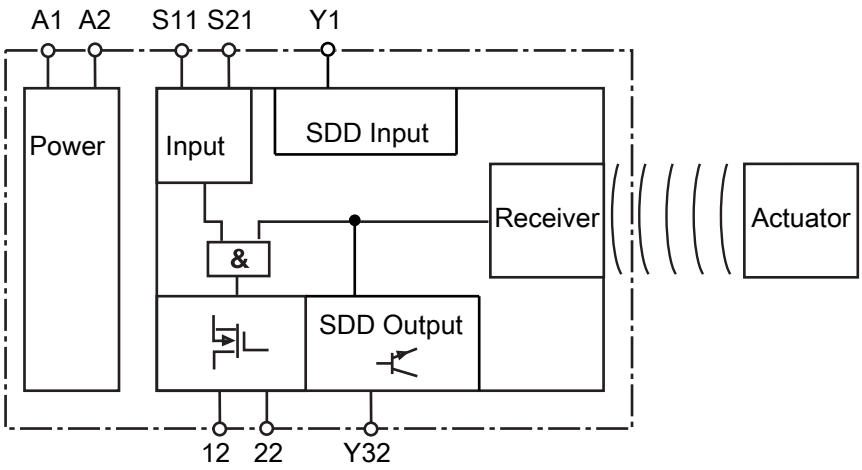

Safety Device Diagnostics

Safety Device Diagnostics is an option that can be selected independently of the safety-related wiring.

When using the Safety Device Diagnostics, up to 16 sensors connected in series can be connected as a subscriber to a fieldbus module.

The communication of the sensors with the fieldbus module is automatically built up again with **each** new supply of the supply voltage. As a result, a sensor can be exchanged, e.g. when servicing, without the need for special measures.

An exchange can be detected via the fieldbus module e.g. through the serial number.

- With Safety Device Diagnostics there are the following diagnostic options for the fieldbus module:
  - Poll information of the sensors (examples: what sensor in the series has switched, at what point could there be an open circuit in the series connection)
  - Read configuration parameters of the sensors (examples: Number of remaining teach-in processes, serial number of the switch)
  - Perform actions (example: poll updated actuator name)

The results of the sensor diagnostics can be checked already during the installation phase via the display in the fieldbus module, without the need to connect the fieldbus module to the network.

- With Safety Device Diagnostics there are the following diagnostic options for the fieldbus module for simple wiring:
  - Information is passed on via the fieldbus module directly to the network
  - Mappings of the signal outputs to the sensor are automated by the SDD.

  This prevents wiring errors and an expansion or reduction of the sensors is possible without the need to change existing wiring.
  - Wiring in accordance with IP20: Rapid installation in the control cabined is enabled.

– Wiring in accordance with IP67: Various passive junctions can be used (see Order references for accessories [📖 35]) to connect several sensors with only one cable from the field in the control cabinet.

Further information on Safety Device Diagnostics can be found in Additional documents that apply [📖 7].

Operating distances

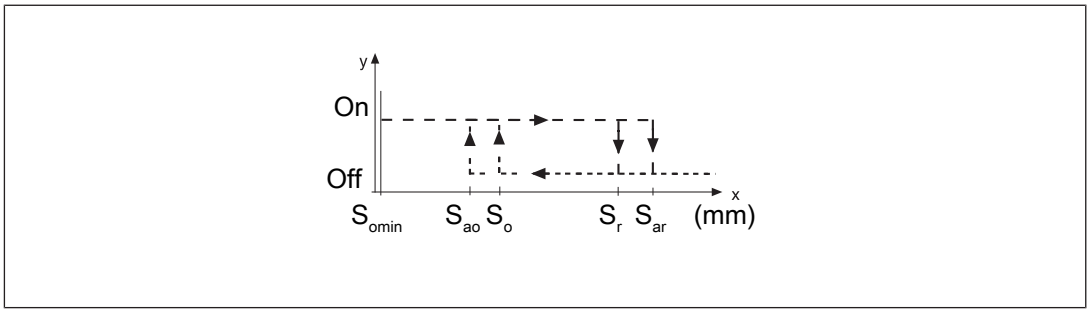

Legend

S_{ao}	Assured operating distance
S_{omin}	Min. operating distance
S_{ar}	Assured release distance

The offset-independent values for the switching distances are included in the Technical details [📖 28].

Lateral and vertical offset

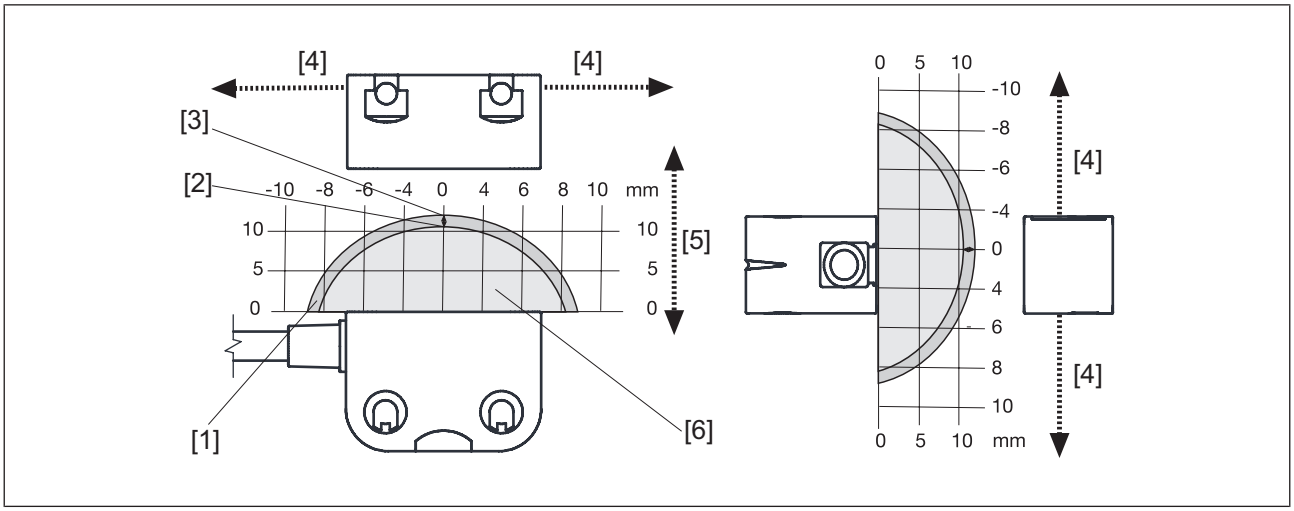

Fig.: Safety switches PSEN cs4.1p/M12 with actuator PSEN cs4.1

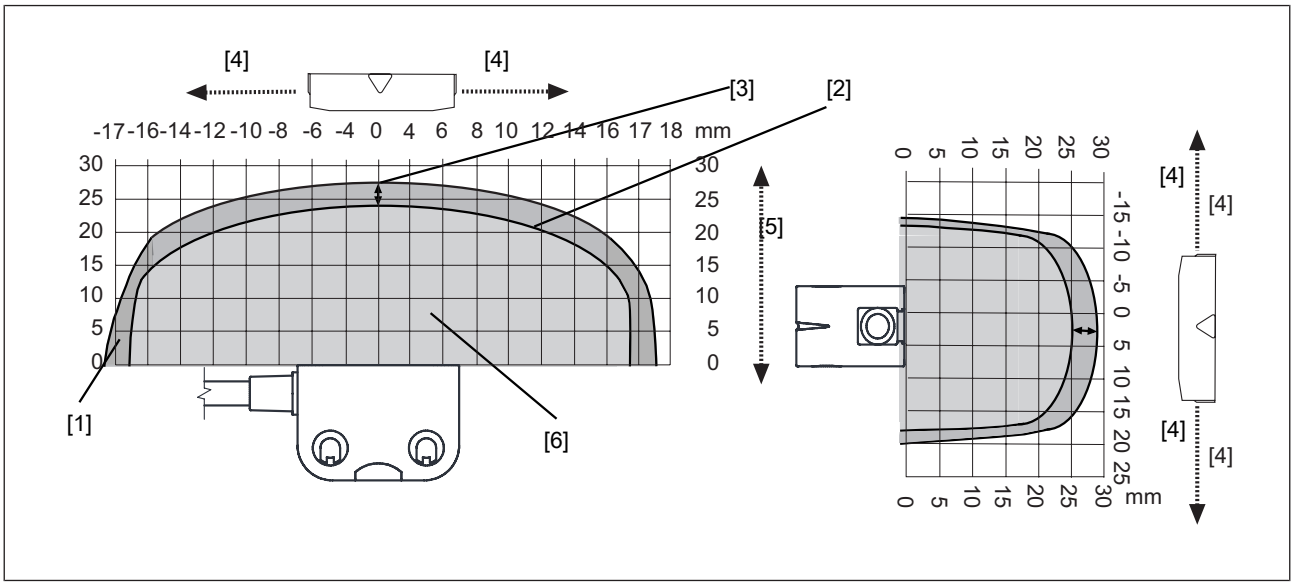

Fig.: Safety switches PSEN cs4.1p/M12 with actuator PSEN cs2.1

Legend

[1] Hysteresis
[2] Typical operating distance S_O
[3] Typical release distance S_r
[4] Offset in mm
[5] Operating distance in mm
[6] Response range

Wiring

Please note:

- Information given in the Technical details [📖 28] must be followed.
- The max. cable length l_{max} in the input circuit is calculated from
  - the max. cable capacitance at the safety outputs (see Technical data [📖 28]).
  - the minimum permitted supply voltage at the sensor (19.2 V).
- The power supply must meet the regulations for extra low voltages with protective separation (SELV, PELV).
- The inputs and outputs of the safety switch must have a protective separation to voltages over 60 VDC.

INFORMATION

Only use safety relays with a 24 VDC supply voltage. Safety relays with a wide-range power supply or in AC device versions have internal potential isolation and are not suitable as evaluation devices.

- The supply voltage to the safety switch must be protected with a 2 A to 4 A quick-acting fuse.
- Ensure the wiring and EMC requirements of EN 60204-1 are met.

- When connecting in series, consider the requirements of manipulation protection and the protection against bypassing or from overriding the safety switch (EN ISO 14119).
- When the safety inputs of the safety switch are controlled by an upstream device, and they are not wired with 24 V,
  - They must be monitored for shorts across the contacts in dependence of the Performance Level or SIL level to be achieved **or**
  - The the faults at the safety inputs that can occur by shorts across contact will have to be excluded by suitable measures (e.g. wiring in accordance with EN 602041).

Terminal assignment connectors

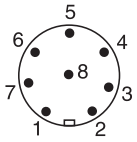	8-pin M8-/ M12-male connector

PIN	Connection designation	Function	Wire colour
1	S21	Input, channel 2	white
2	A1	+24 VUB	brown
3	12	Output, channel1	green
4	22	Output, channel2	yellow
5	Y32	Signal output/diagnostic output	grey
6	S11	Input, channel 1	pink
7	A2	0 V UB	blue
8	Y1	Diagnostics input	red

The wire colour also applies for the cable available from Pilz as an accessory.

Connection to evaluation devices

Make sure that the selected evaluation device has the following property:

- OSSD signals are evaluated through 2 channels with feasibility monitoring

Please note:

- Information given in the Technical details [📖 28] must be followed.
- The use of Safety Device Diagnostics is described in the System Description "Safety Device Diagnostics".



CAUTION!

Do not connect the signal output to 0 V!

If the signal output Y32 is connected to 0 V, the safety switch may be damaged as a result. Connect the signal output Y32 to a consumer, e.g. to the input on a control system, or leave the signal output unconnected. Also note the max. current (see Technical details [📖 28]).

Single connection

Connection diagram, single connection without SDD

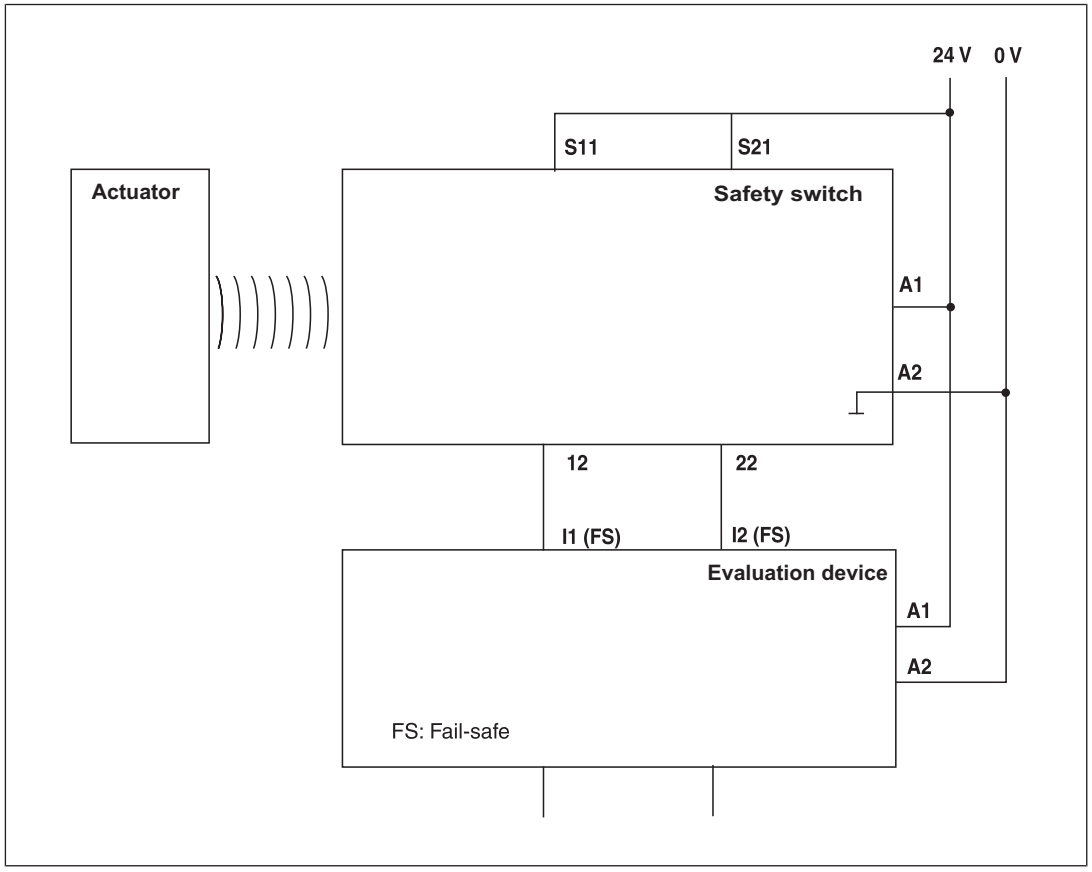

Connection diagram, single connection with SDD

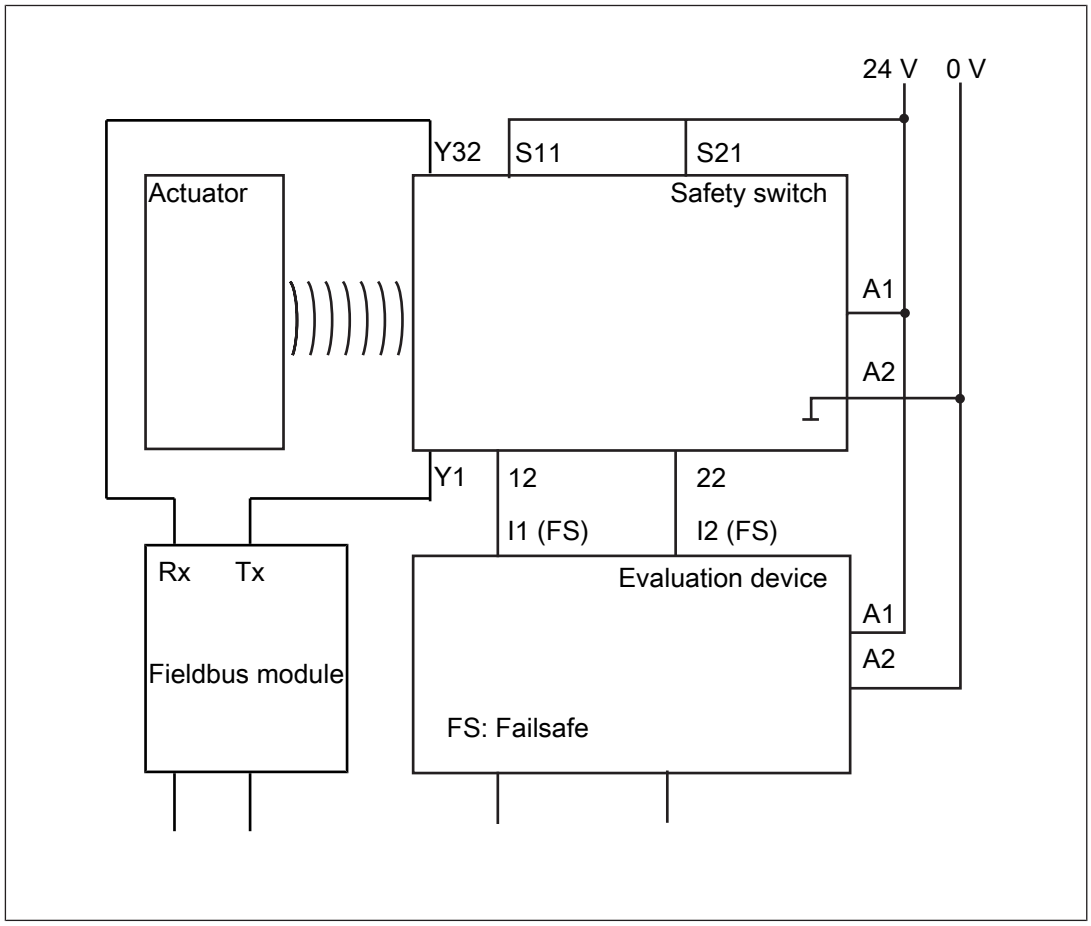

Series connection

The safety sensors PSENcode are also suitable for series connection with other sensors.

Maximum number of PSENcode sensors switched in series connections for SIL CL 3 using SDD

- PSENcode compact design (PSEN cs3 – cs4, 8-pin): 12

When using other SDD-compatible sensors, the number must be recalculated.

In practice, the maximum possible number will be limited by the following parameters, among others:

- The required SIL level (e.g. SIL CL 3),
- the required performance level (e.g. PL e (Cat. 4)),
- the maximum delay or risk time permitted by the application.

Ensure there is sufficient supply voltage, taking inrush currents and fusing into consideration.



CAUTION!

Extension of delay-on de-energisation

When several (n) devices are connected in series, the delay-on de-energisation time adds with the number of interconnected safety switches.
The max. delay-on de-energisation is made up of the
risk time (see Technical details [📖 28])
+ (n-1) x max. delay-on de-energisation of the inputs
+ max. delay-on de-energisation of the evaluation device

- When making series connections using SDD, only use the following passive junctions.
  - PSEN ix2 F4 code
  - PSEN ix2 F8 code
  - PSEN Y junction M8-M12/M12 PIGTAIL
  - PSEN Y junction M12-M12/M12 PIGTAIL
  - PSEN Y junction M12 SENSOR
  - PSEN Y junction M12 cable channel
  - PSEN Y junction M8 SENSOR
  - PSEN Y junction M8 cable channel

Connection diagram, series connection without SDD

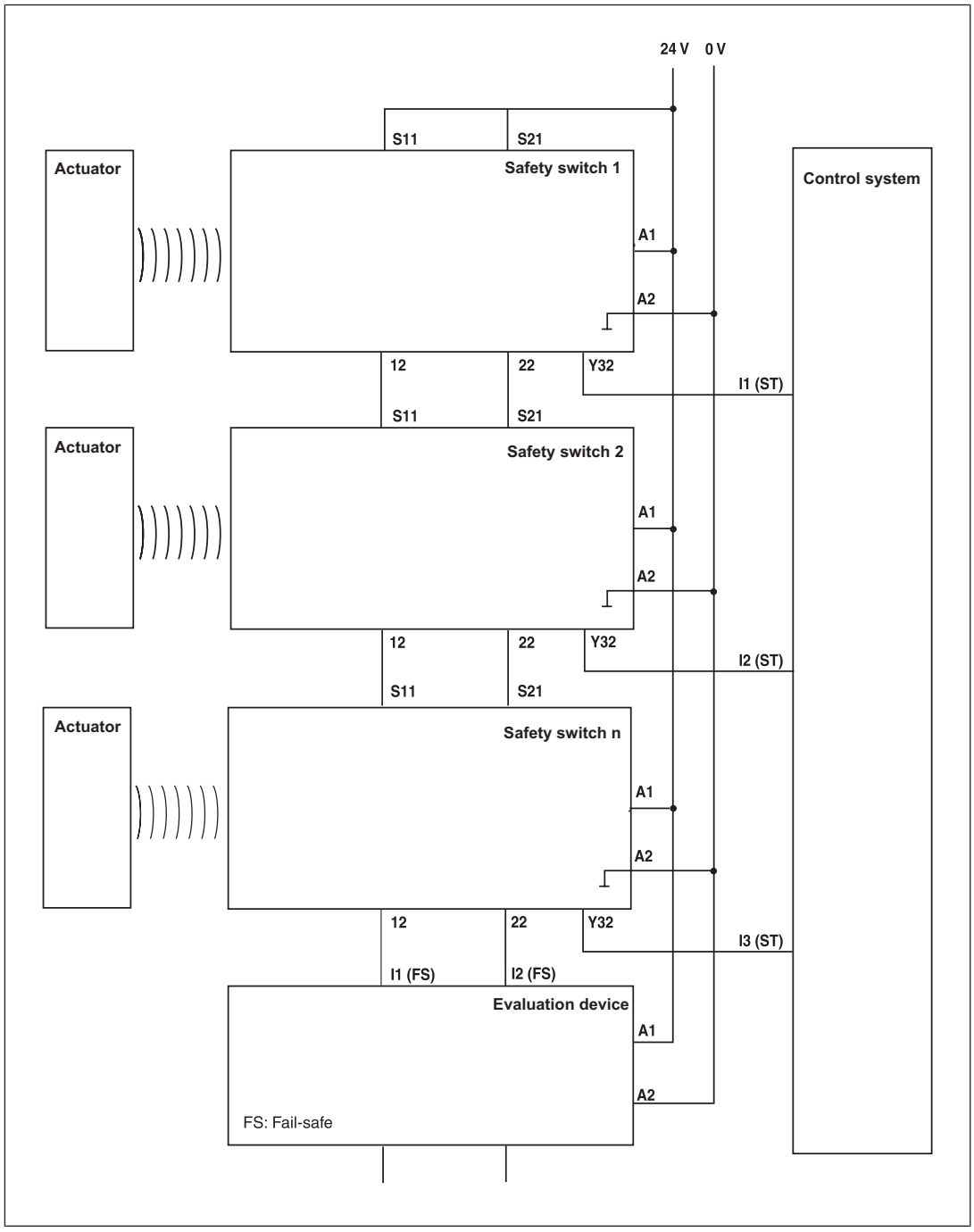

Connection diagram, series connection with SDD

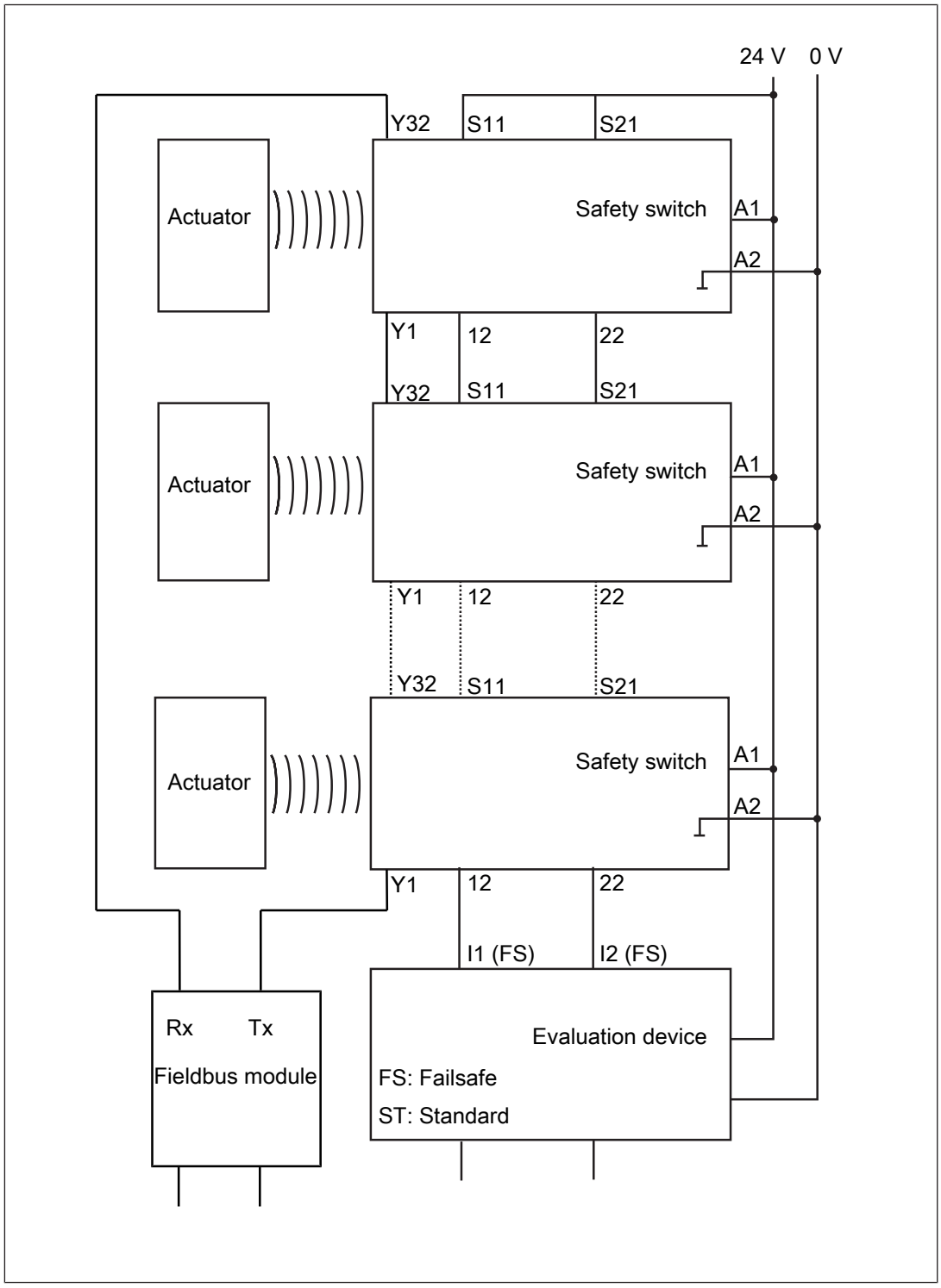

Connection to Pilz evaluation devices

The safety switch PSEN cs4.1p/M12 can be connected to Pilz evaluation devices, for example.

Suitable Pilz evaluation devices are, for example:

- PNOZelog for safety gate monitoring
- PNOZpower for safety gate monitoring
- PNOZsigma for safety gate monitoring
- PNOZ X for safety gate monitoring
- PNOZmulti for safety gate monitoring
  Configure the switch in the PNOZmulti Configurator with switch type 3.
- PSS for safety gate monitoring with standard function block SB064, SB066 or FS_Safety Gate

The correct connection to the respective evaluation device is described in the operating manual for the evaluation device. Make sure that the connection is made in accordance with the specifications in the operating manual for the selected evaluation device.

The connections to two evaluation devices are shown on the following pages, by way of example:

- PNOZ s3 and
- PNOZmulti

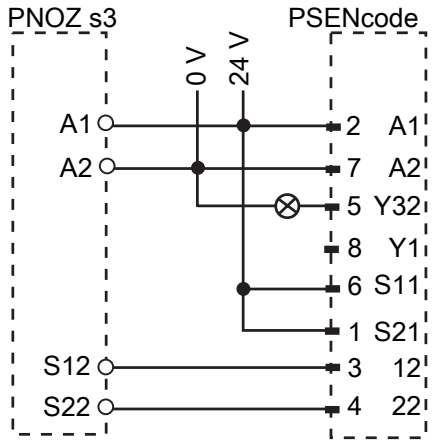

Without SDD

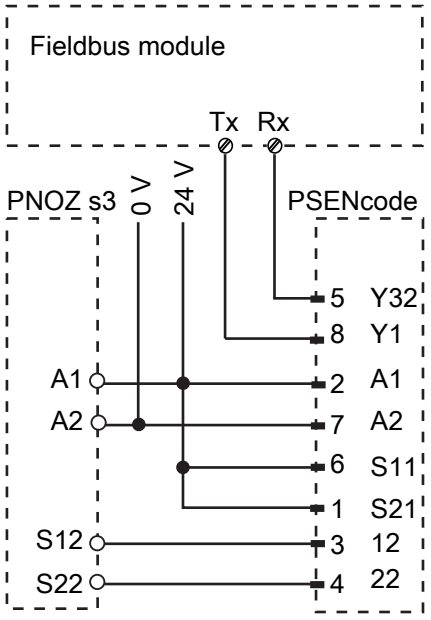

With SDD

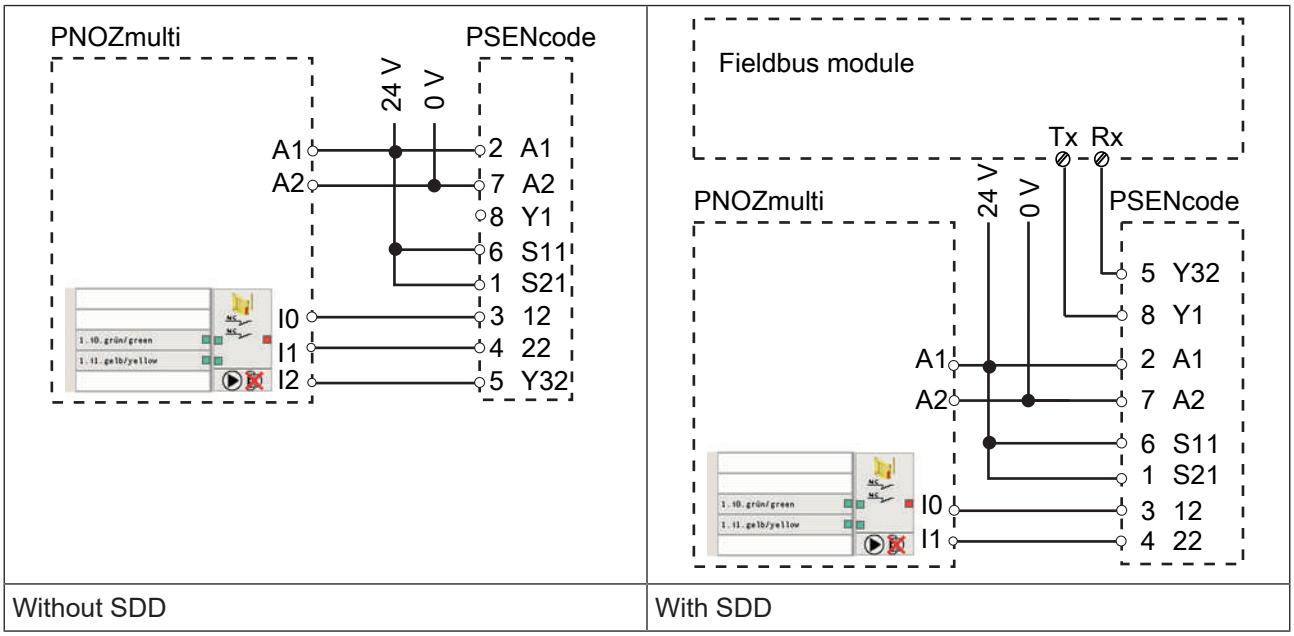

Without SDD	With SDD

Legend:

I0	Input OSSD
I1	Input OSSD
I2	Signal input

Teaching in the actuator

Teaching in the actuator for the first time:

The first actuator PSEN cs4.1 detected by the safety switch is automatically taught in as soon as it is brought into the response range.

To teach in a new actuator:

A maximum of 8 learning procedures are possible.

1. The actuator that is to be taught in must be brought into the safety switch's response range as the only transponder. As soon as the actuator is detected, the "Safety Gate" LED will flash yellow.
2. After 20 s has elapsed, the "Safety Gate" LED turns to quick yellow flashes. Trigger a system reset in the next 120 s by interrupting the power supply.
3. When the supply voltage is switched back on, the learning procedure is complete and the number of permitted additional learning procedures is reduced by 1.

NOTICE

- The actuator must not be removed during the learning procedure.
- It is no loner possible to reteach his actuator on the same safety switch.

Installation



CAUTION!

The unit's properties may be affected if installed in an environment containing electrically or magnetically conductive material. Please check the operating distances and the assured release distance.

- The safety switch and actuator should be installed opposite each other in parallel.
- Actuator PSEN cs4.1: Safety switches and actuators should only be secured using M4 screws with a flat head (e.g. M4 cheese-head or pan head screws).

  The actuator should be protected from unauthorised removal and from contamination. Close the mounting holes using the seals provided. The use of seals should be regarded as equivalent to using permanent fastenings in accordance with Clause 7.2c of EN ISO 14119.
- Actuator PSEN cs2.1: Safety switches and actuators should be permanently secured using M5 safety screws with a flat head (e.g. M5 cheese-head or pan head screws).
- Torque setting: Please note the information provided under Technical details [📖 28].
- The distance between two safety switches must be maintained (see Technical details [📖 28]).
- Make sure that the safety switch and actuator cannot be used as an end stop.
- Please note the installation measures in accordance with EN ISO 14119 for a safety switch design 4 and with level of coding High.
- For simpler installation, the mounting brackets (see Order reference for Accessories [📖 35]) can be used.
- Please note the permitted bending radii for the cable (see Technical details [📖 28]), to avoid excessive force on the individual strands.
- Make sure that the bend protection is not damaged. Such damage can cause the whole product to fail.

Procedure:

Please note:

Installation is identical for all combinations of safety switch and approved actuators. The diagram of the actuators PSEN cs4.1 and PSEN cs2.1 represents the other approved actuators.

Safety switches PSEN cs4.1 with actuator PSEN cs4.1

1. Drill holes in the mounting surface to secure the actuator and safety switch (see Dimensions in mm [26]).
2. Use two screws to fix the safety switch in place. Do not fully tighten the 2nd screw on the safety switch.

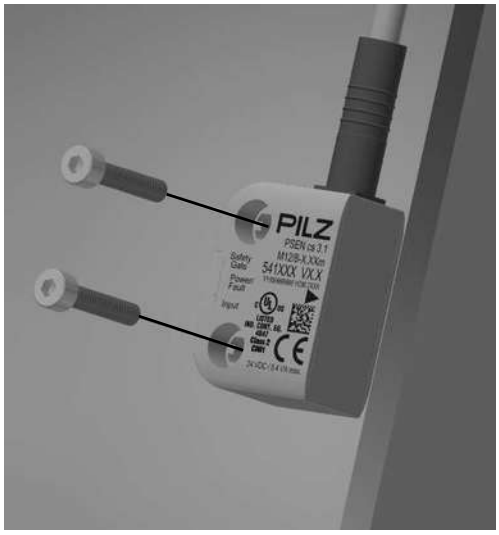

3. Attach the screws for the actuator, leaving a distance of 3 … 6 mm between the screw head and plate.
4. Slide the actuator on to the screws. The arrows on the labelled surfaces of the safety switch and actuator must face each other. Align the actuator and tighten the screws.



Parallel assembly



Orthogonal assembly

5. Align the safety switch and tighten the screws.
6. Close the mounting holes using the seals provided (see diagram).
   Use the seals [1] for UL approval or [4] without UL approval.

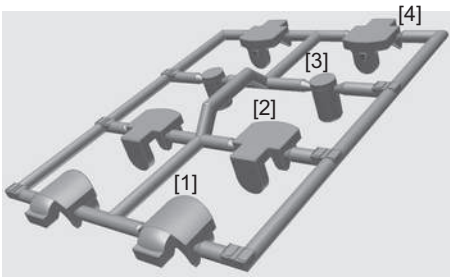

Legend

[1] Side seal with UL approval

[2] Bottom seal

[3] Top seal, sensing side

[4] Side seal without UL approval

7. Use the seals to close the mounting holes on the sensing face of the safety switch (see diagram, [3]).
8. Use the seals [2] to close the unused mounting holes on the actuator (see diagram, [2]).

Safety switches PSEN cs4.1 with actuator PSEN cs2.1

1. Drill holes in the mounting surface to secure the actuator and safety switch (see Dimensions in mm [📖 26]).
2. Use two screws to fix the safety switch in place. Do not fully tighten the 2nd screw on the safety switch.

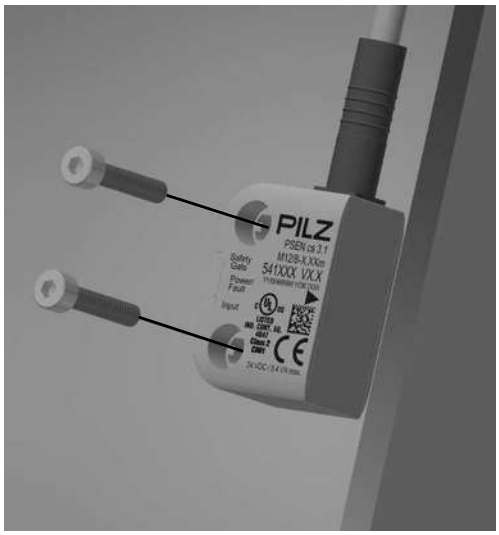

3. Attach the screws for the actuator, leaving a distance of 3 … 6 mm between the screw head and plate.

4. Fix the actuator.
   The arrows on the labelled surfaces of the safety switch and actuator must face each other. Align the actuator and tighten the screws.
5. Align the safety switch and tighten the screws.

Adjustment

- The stated operating distances (see Technical details [📖 28]) only apply when the safety switch and actuator are installed facing each other in parallel. Operating distances may deviate if other arrangements are used.
- Note the maximum permitted lateral and vertical offset (see Operating distances [📖 12] and Lateral and vertical offset [📖 12]).

Operation



NOTICE

The safety function should be checked after initial commissioning and each time the plant/machine is changed. The safety functions may only be checked by qualified personnel.

Status indicators:

- "Power/Fault" LED lights up green: The unit is ready for operation
- "Safety Gate" LED lights up yellow: Actuator is within the response range
- "Input" LED lights up yellow: There is a high signal at both inputs

Fault indicator:

- "Input" LED lights up yellow: the signal switches from high to low at one input, while a high signal remains on the other input (partial operation).
  Remedy: Open both channels of the input circuit.
- "Power/Fault" LED lights up red: Error message
  Remedy: Rectify fault and interrupt power supply.

Please note the different times for

- The switch-on delay after UB is applied
- The recovery time of the sensor and evaluation device.

Dimensions in mm

Safety switch PSEN cs4.1p

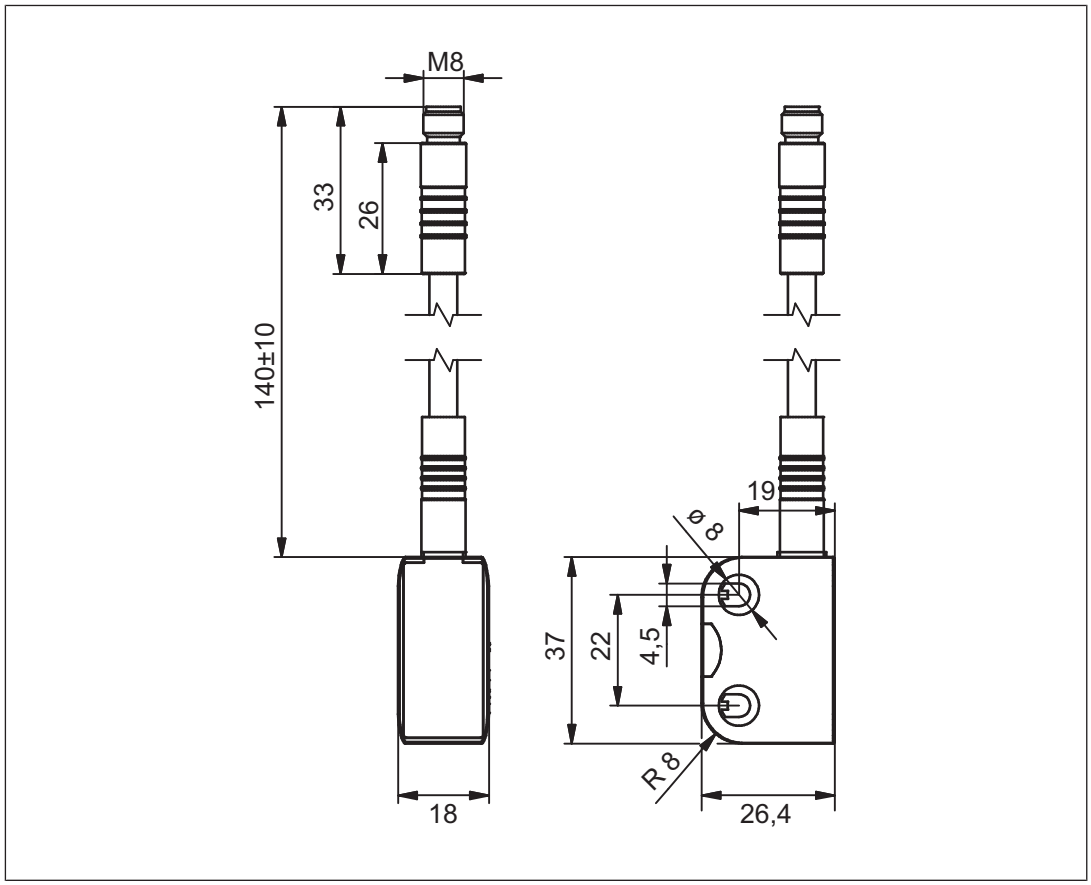

Safety switch PSEN cs4.1 M12/8-0.15m

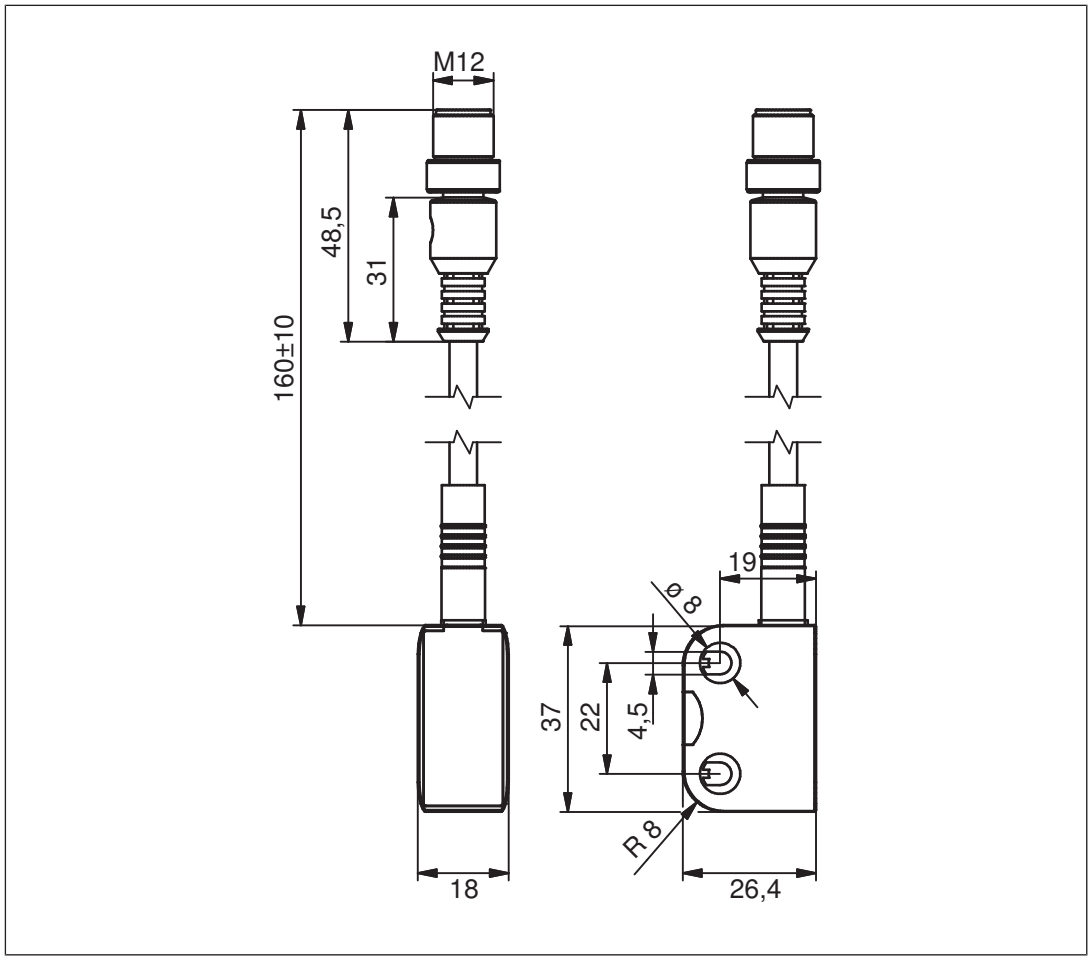

Actuator

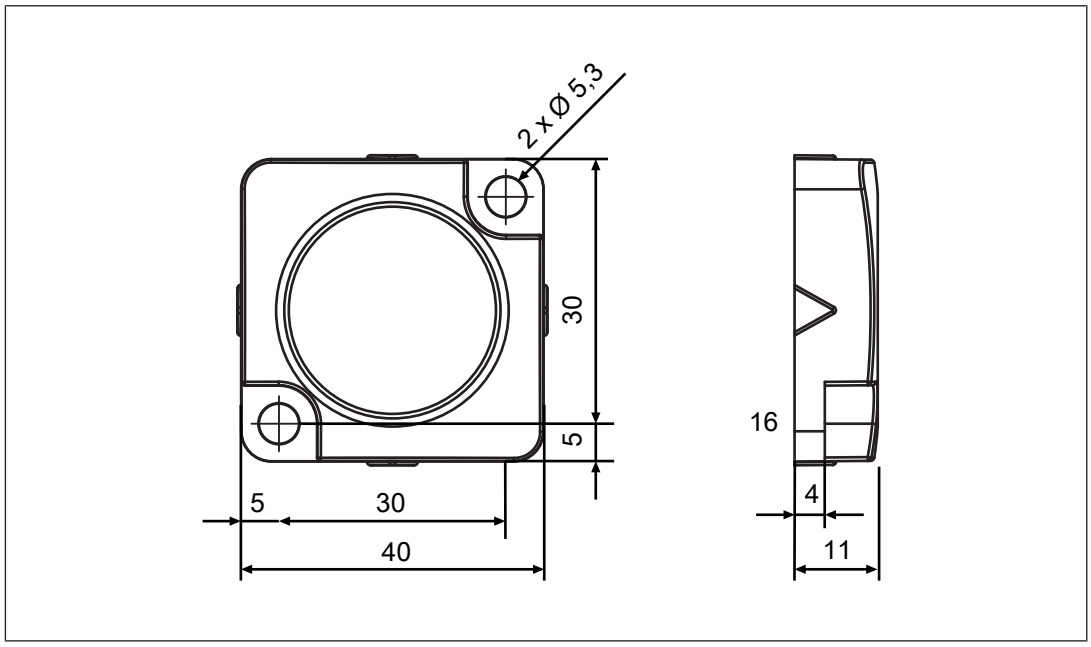

Fig.: Actuator PSEN cs2.1

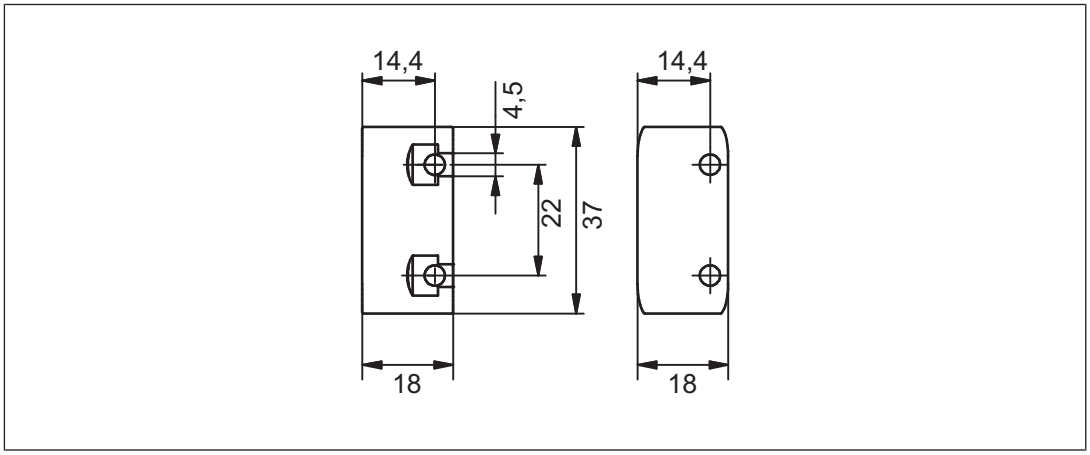

Fig.: Actuator PSEN cs4.1

Technical details safety switch

General	541159	541160
Certifications	**CE, EAC (Eurasian), FCC, IC, TÜV, cULus Listed**	**CE, EAC (Eurasian), FCC, IC, TÜV, cULus Listed**
Sensor's mode of operation	**Transponder**	**Transponder**
Coding level in accordance with EN ISO 14119	**High**	**High**
Design in accordance with EN ISO 14119	**4**	**4**
Classification in accordance with EN 60947-5-3	**PDDB**	**PDDB**
Pilz coding type	**fully coded**	**fully coded**
Transponder	**541159**	**541160**
Frequency band	**122 kHz - 128 kHz**	**122 kHz - 128 kHz**
Max. transmitter output	**15 mW**	**15 mW**
Electrical data	**541159**	**541160**
Supply voltage		
Voltage	**24 V**	**24 V**
Kind	**DC**	**DC**
Voltage tolerance	**-20 %/+20 %**	**-20 %/+20 %**
Output of external power supply (DC)	**1 W**	**1 W**
Max. switching frequency	**3 Hz**	**3 Hz**
Max. cable capacitance at the safety outputs		
No-load, PNOZ with relay contacts	**400 nF**	**400 nF**
PNOZmulti, PNOZelog, PSS	**400 nF**	**400 nF**
Max. inrush current impulse		
Current pulse, A1	**0,58 A**	**0,58 A**
Pulse duration, A1	**1 ms**	**1 ms**

Electrical data	541159	541160
No-load current	**20 mA**	**20 mA**
Inputs	**541159**	**541160**
Number	**2**	**2**
Voltage at inputs	**24 V DC**	**24 V DC**
Input current range	**5 mA**	**5 mA**
Max. overall cable resistance Rl-max		
Single-channel at UB DC	**1000 Ohm**	**1000 Ohm**
Semiconductor outputs	**541159**	**541160**
OSSD safety outputs	**2**	**2**
Signal outputs	**1**	**1**
Switching current per output	**100 mA**	**100 mA**
Breaking capacity per output	**2,4 W**	**2,4 W**
Potential isolation from system voltage	**No**	**No**
Short circuit-proof	**yes**	**yes**
Residual current at outputs	**20 µA**	**20 µA**
Voltage drop at OSSDs	**3,5 V**	**3,5 V**
Lowest operating current	**0 mA**	**0 mA**
Utilisation category in accordance with EN 60947-1	**DC-12**	**DC-12**
Times	**541159**	**541160**
Test pulse duration, safety outputs	**450 µs**	**450 µs**
Switch-on delay		
after UB is applied	**1 s**	**1 s**
Inputs typ.	**13 ms**	**13 ms**
Inputs max.	**20 ms**	**20 ms**
Actuator typ.	**60 ms**	**60 ms**
Actuator max.	**150 ms**	**150 ms**
Delay-on de-energisation		
Inputs typ.	**15 ms**	**15 ms**
Inputs max.	**20 ms**	**20 ms**
Actuator typ.	**40 ms**	**40 ms**
Actuator max.	**260 ms**	**260 ms**
Risk time in accordance with EN 60947-5-3	**260 ms**	**260 ms**
Supply interruption before de-energisation	**10 ms**	**10 ms**
Simultaneity, channel 1 and 2 max.	∞	∞
Environmental data	**541159**	**541160**
Ambient temperature		
In accordance with the standard	**EN 60068-2-14**	**EN 60068-2-14**
Temperature range	**-25 - 70 °C**	**-25 - 70 °C**

Environmental data	541159	541160
Storage temperature		
In accordance with the standard	**EN 60068-2-1/-2**	**EN 60068-2-1/-2**
Temperature range	**-25 - 70 °C**	**-25 - 70 °C**
Climatic suitability		
In accordance with the standard	**EN 60068-2-78**	**EN 60068-2-78**
Humidity	**93 % r. h. at 40 °C**	**93 % r. h. at 40 °C**
EMC	**EN 60947-5-3**	**EN 60947-5-3**
Vibration		
In accordance with the standard	**EN 60947-5-2**	**EN 60947-5-2**
Frequency	**10 - 55 Hz**	**10 - 55 Hz**
Amplitude	**1 mm**	**1 mm**
Shock stress		
In accordance with the standard	**EN 60947-5-2**	**EN 60947-5-2**
Acceleration	**30g**	**30g**
Duration	**18 ms**	**18 ms**
Airgap creepage		
Overvoltage category	**III**	**III**
Pollution degree	**3**	**3**
Rated insulation voltage	**75 V**	**60 V**
Rated impulse withstand voltage	**0,8 kV**	**0,8 kV**
Protection type		
Housing	**IP6K9K**	**IP6K9K**
Connector	**IP67**	**IP67**
Mechanical data	**541159**	**541160**
Min. bending radius (fixed permanently) K1	**5 x Ø**	**5 x Ø**
Min. bending radius (moving) K1	**10 x Ø**	**10 x Ø**
Cable diameter K1	**5,55 mm**	**5,55 mm**
Actuator 1	**PSEN cs4.1**	**PSEN cs4.1**

Mechanical data	541159	541160
Operating distances		
for actuators	**PSEN cs4.1**	**PSEN cs4.1**
Assured operating distance Sao	**8 mm**	**8 mm**
Typical operating distance So	**11 mm**	**11 mm**
Assured release distance Sar	**20 mm**	**20 mm**
Typical release distance Sr	**14 mm**	**14 mm**
Repetition accuracy switching distances	**10 %**	**10 %**
Change of operating distance with temperature changes	**+-0,01mm/°C**	**+-0,01mm/°C**
Typ. Hysteresis	**2 mm**	**2 mm**
for actuators	**PSEN cs2.1**	**PSEN cs2.1**
Assured operating distance Sao	**10 mm**	**10 mm**
Typical operating distance So	**25 mm**	**25 mm**
Assured release distance Sar	**33 mm**	**33 mm**
Typical release distance Sr	**29 mm**	**29 mm**
Repetition accuracy switching distances	**10 %**	**10 %**
Change of operating distance with temperature changes	**+-0,1mm/°C**	**+-0,1mm/°C**
Typ. Hysteresis	**3 mm**	**3 mm**
Min. distance between safety switches	**100 mm**	**100 mm**
Sensor flush installation in accordance with EN 60947-5-2	**Yes, follow installation guidelines**	**Yes, follow installation guidelines**
Connection type	**M12, 8-pin male connector**	**M8, 8-pin male connector**
Cable	**Li9Y11Y 8 x 0,14 mm2**	**Li9Y11Y 8 x 0,14 mm2**
Material		
Top	**PBT**	**PBT**
Max. torque setting for fixing screws	**0,8 Nm**	**0,8 Nm**
Dimensions		
Height	**37 mm**	**37 mm**
Width	**26 mm**	**26 mm**
Depth	**18 mm**	**18 mm**
Weight of safety switch	**40 g**	**35 g**

Where standards are undated, the 2016-10 latest editions shall apply.

Technical details actuator

General	540180	541180
Certifications	CE, TÜV, cULus Listed	CE, EAC (Eurasian), TÜV, cULus Listed
Sensor's mode of operation	Transponder	Transponder
Coding level in accordance with EN ISO 14119	High	High
Pilz coding type	fully coded	fully coded
Transponder	**540180**	**541180**
Frequency band	122 kHz - 128 kHz	122 kHz - 128 kHz
Max. transmitter output	7 dBm	7 dBm
Environmental data	**540180**	**541180**
Ambient temperature		
In accordance with the standard	EN 60068-2-14	EN 60068-2-14
Temperature range	-25 - 70 °C	-25 - 70 °C
Storage temperature		
In accordance with the standard	EN 60068-2-1/-2	EN 60068-2-1/-2
Climatic suitability		
In accordance with the standard	EN 60068-2-78	EN 60068-2-78
Humidity	93 % r. h. at 40 °C	93 % r. h. at 40 °C
EMC	EN 60947-5-3	EN 60947-5-3
Vibration		
In accordance with the standard	EN 60947-5-2	EN 60947-5-2
Frequency	10 - 55 Hz	10 - 55 Hz
Amplitude	1 mm	0,35 mm
Shock stress		
In accordance with the standard	EN 60947-5-2	EN 60947-5-2
Acceleration	30g	30g
Duration	11 ms	18 ms
Protection type		
Housing	IP6K9K	IP6K9K
Mechanical data	**540180**	**541180**
Material		
Top	PBT	PBT
Max. torque setting for fixing screws	1 Nm	0,8 Nm
Dimensions		
Height	11 mm	37 mm
Width	40 mm	18 mm
Depth	40 mm	18 mm
Weight	20 g	11 g

Where standards are undated, the 2016-10 latest editions shall apply.

Safety characteristic data



NOTICE

You must comply with the safety characteristic data in order to achieve the required safety level for your plant/machine.

Operating mode	EN ISO 13849-1: 2015 PL	EN ISO 13849-1: 2015 Category	EN 62061 SIL CL	EN 62061 PFH_D [1/h]	IEC 61511 SIL	IEC 61511 PFD	EN ISO 13849-1: 2015 T_M [year]
2-ch. OSSD	**PL e**	**Cat. 4**	**SIL CL 3**	**2,62E-09**	–	**7,68E-05**	**20**

Explanatory notes for the safety-related characteristic data:

- The SIL CL value in accordance with EN 62061 corresponds to the SIL value in accordance with EN 61508.
- T_M is the maximum mission time in accordance with EN ISO 13849-1. The value also applies as the retest interval in accordance with EN 61508-6 and IEC 61511 and as the proof test interval and mission time in accordance with EN 62061.

All the units used within a safety function must be considered when calculating the safety characteristic data.



INFORMATION

A safety function's SIL/PL values are **not** identical to the SIL/PL values of the units that are used and may be different. We recommend that you use the PAScal software tool to calculate the safety function's SIL/PL values.

Supplementary data

Radio approval

USA/Canada

FCC ID: VT8-PSENCS3
IC: 7482A-PSENCS3

FCC/IC-Requirements:
This product complies with Part 15 of the FCC Rules and with Industry Canada licence-exempt RSS standards.
Operation is subject to the following two conditions:
1) this product may not cause harmful interference, and
2) this product must accept any interference received, including interference that may cause undesired operation.

Changes or modifications made to this product not expressly approved by Pilz may void the FCC authorization to operate this equipment.

NOTE: This equipment has been tested and found to comply with the limits for a Class A digital device, pursuant to Part 15 of the FCC Rules. These limits are designed to provide reasonable protection against harmful interference when the equipment is operated in a commercial environment. This equipment generates, uses, and can radiate radio frequency energy and, if not installed and used in accordance with the instruction manual, may cause harmful interference to radio communications. Operation of this equipment in a residential area is likely to cause harmful interference in which case the user will be required to correct the interference at his own expense.

Le présent produit est conforme aux CNR d'Industrie Canada applicables aux appareils radio
exempts de licence. L'exploitation est autorisée aux deux conditions suivantes:
(1) le produit ne doit pas produire de brouillage, et
(2) l'utilisateur de le produit doit accepter tout brouillage radioélectrique subi, même si le brouillage est susceptible d'en compromettre le fonctionnement.

Order reference

Safety switch

Product type	Features		Order no.
PSEN cs4.1 M12/8-0.15m 1switch	Safety switch, fully coded	8-pin M12 connector	541 159
PSEN cs4.1p 1switch	Safety switch, fully coded	8-pin M8 male connector	541 160

Actuator

Product type	Features		Order no.
PSEN cs2.1 1 actuator	Actuator, coded		540 180
PSEN cs4.1 1 actuator	Actuator, coded		541 180

Complete systems

Product type	Features		Order no.
PSEN cs4.1 M12/8-0.15m/PSEN cs4.1 1Unit	Safety gate system, fully coded	8-pin M12 connector	541 109
PSEN cs4.1p /PSEN cs4.1 1unit	Safety gate system, fully coded	8-pin M8 male connector	541 110

Accessories

Installation materials

Product type	Features	Order no.
PSEN bracket	Mounting bracket	532 110
PSEN mag/cs bracket straight	Mounting aid	532 111
PSEN screw M4x20 10pcs	Safety screws made from stainless steel with one-way slot	540 313
PSEN screw M4x26 10pcs	Safety screws made from stainless steel with one-way slot	540 314

Cable

Product type	Connection 1	Connection 2	Length	Order no.
PSEN cable M12-8sf	Straight, M12, 8-pin, socket	Open cable	3 m	540 319
			5 m	540 320
			10 m	540 321
			20 m	540 333
			30 m	540 326
PSEN cable M12-8af	Angled, M12, 8-pin, socket	Open cable	3 m	540 322
			5 m	540 323
			10 m	540 324
			30 m	540 325
PSEN cable M12-8sf M12-8sm	straight, M12, 8-pin, socket	Straight, M12, 8-pin, pin	2 m	540 340
			5 m	540 341
			10	540 342
			20 m	540 343
			30 m	540 344
PSEN cable M8-8sf	Straight, M8, 8-pin, socket	Open cable	2 m	533 150
			5 m	533 151
			10 m	533 152
PSEN cable M8-8af, 10m	Angled, M8, 8-pin, socket		10 m	533 162
PSEN cable M8-8sf	Straight, M8, 8-pin, socket		20 m	533 153
			30 m	533 154
PSEN cable M8-8sf M8-sm	Straight, M8, 8-pin, pin	Straight, M8, 8-pin, socket	0.5 m	533 155
PSEN cable M8-8sf M8-8sm			1 m	533 156
PSEN cable M8-8sf M8-8sm			2 m	533 157

Adapter

Product type	Features	Connector X1	Connector X2	Connector X3	Order no.
PSEN converter M8-8sf -- M12-8sm	0.25 m	M12, 8-pin male connector, straight	M 8, 8-pin female connector, straight		540 329

Series connection

Product type	Connection X1	Connection X2	Connection X3	Order no.
PSEN Y junction M12 SENSOR	M12, 8-pin, pin	M12, 8-pin, socket	M12, 8-pin, socket	540 315
PSEN Y junction M12 cable channel	M12, 8-pin, pin	M12, 8-pin, socket	M12, 8-pin, socket	540 316
PSEN T junction M12	M12, 8-pin, socket	M12, 8-pin, pin	M8, 4-pin, pin	540 331
PSEN Y junction M8-M12/ M12 PIGTAIL	M12, 8-pin, socket	M12, 8-pin, pin	M8, 8-pin, socket	540 337
PSEN Y junction M12-M12/ M12 PIGTAIL	M12, 8-pin, socket	M12, 8-pin, pin	M12, 8-pin, socket	540 338

PDP67 F 4 code	Decentralised passive junction	773 603
PDP67 F 4 code VA	Decentralised passive junction, V2A ring nut	773 613

Safety Device Diagnostics

Product type	Features	Connection type	Order no.
PSEN ix2 F4 code	Interface for connecting max. 4 PSEN safety sensors	Spring-loaded terminal	535 111
PSEN ix2 F8 code	Interface for connecting max. 8 PSEN safety sensors	Spring-loaded terminal	535 112

SDD ES ETH	Fieldbus module Modbus/ TCP for Safety Device Diagnostics	Spring-loaded terminal	540 130
SDD ES Profibus	Fieldbus module Profibus for Safety Device Diagnostics	Spring-loaded terminal	540 132
SDD ES Profinet	Fieldbus module for Safety Device Diagnostics	Spring-loaded terminal	540 138

EC declaration of conformity

This product/these products meet the requirements of the following directives of the European Parliament and of the Council.

- 2006/42/EC on machines
- 2014/53/EC on radio equipment

The complete EC Declaration of Conformity is available on the Internet at www.pilz.com/downloads.
Representative: Norbert Fröhlich, Pilz GmbH & Co. KG, Felix-Wankel-Str. 2, 73760 Ostfildern, Germany

Support

Technical support is available from Pilz round the clock.

Americas
Brazil
+55 11 97569-2804
Canada
+1 888-315-PILZ (315-7459)
Mexico
+52 55 5572 1300
USA (toll-free)
+1 877-PILZUSA (745-9872)

Asia
China
+86 21 60880878-216
Japan
+81 45 471-2281
South Korea
+82 31 450 0680

Australia
+61 3 95600621

Europe
Austria
+43 1 7986263-0
Belgium, Luxembourg
+32 9 3217575
France
+33 3 88104000
Germany
+49 711 3409-444
Ireland
+353 21 4804983
Italy, Malta
+39 0362 1826711
Scandinavia
+45 74436332
Spain
+34 938497433
Switzerland
+41 62 88979-30
The Netherlands
+31 347 320477
Turkey
+90 216 5775552
United Kingdom
+44 1536 462203

You can reach our international hotline on:
+49 711 3409-444
support@pilz.com

Pilz develops environmentally-friendly products using ecological materials and energy-saving technologies. Offices and production facilities are ecologically designed, environmentally-aware and energy-saving. So Pilz offers sustainability, plus the security of using energy-efficient products and environmentally-friendly solutions.

Energy saving by Pilz

BLUECOMPETENCE Alliance Member
Partner of the Engineering Industry Sustainability Initiative

pilz
Partner of:
The Best of German Engineering

Pilz GmbH & Co. KG
Felix-Wankel-Straße 2
73760 Ostfildern, Germany
Tel.: +49 711 3409-0
Fax: +49 711 3409-133
info@pilz.com
www.pilz.com

PILZ
THE SPIRIT OF SAFETY

1003293-EN-08, 2019-02 Printed in Germany
© Pilz GmbH & Co. KG, 2015

CMSE®, InduraNET p®, PAS4000®, PAScal®, PASconfig®, Pilz®, PIT®, PLID®, PMCprimo®, PMCprotego®, PMCtendo®, PMD®, PMI®, PNOZ®, Primo®, PSEN®, PSS®, PVIS®, SafetyBUS SafetyEYE®, SafetyNET p®, THE SPIRIT OF SAFETY® are registered and protected trademarks of Pilz GmbH & Co. KG in some countries. We would point out that product features m from the details stated in this document, depending on the status at the time of publication and the scope of the equipment. We accept no responsibility for the validity, accuracy and entirety of the text and graphics presented in this information. Please contact our Technical Support if you have any questions.