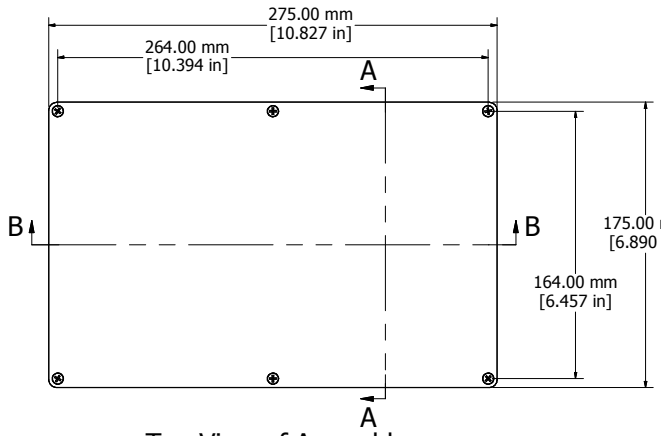

Top View of Assembly

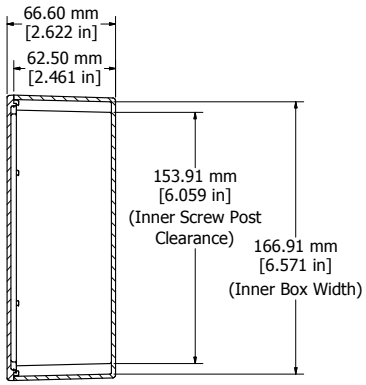

SECTION A-A
End View of Assembly

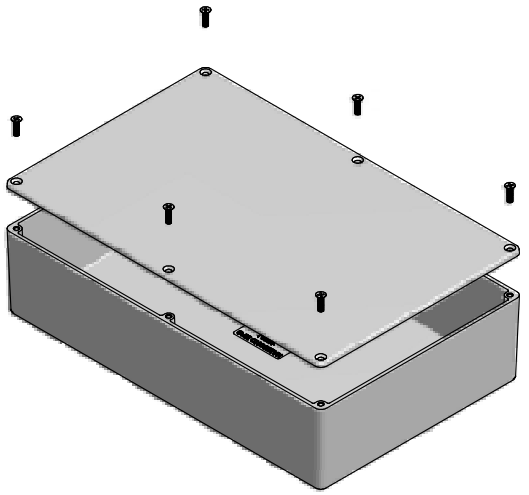

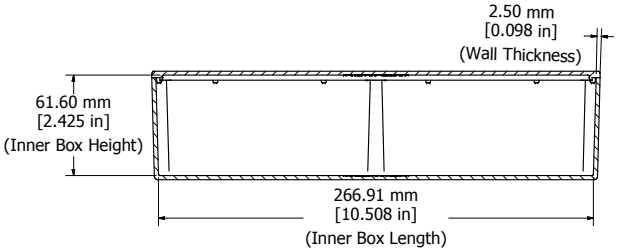

SECTION B-B
Side View of Assembly

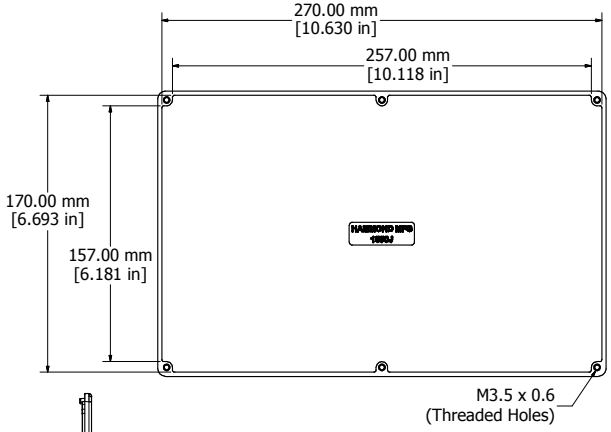

Top View Looking Inside Box

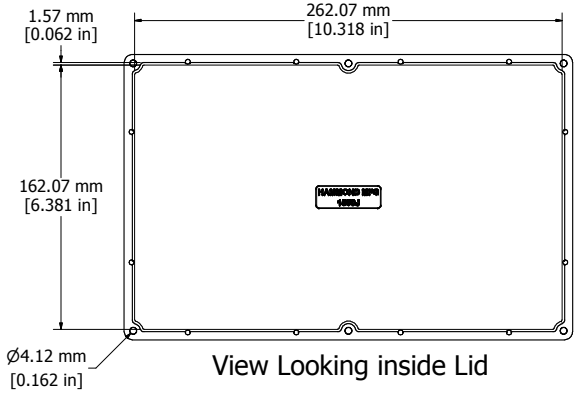

View Looking inside Lid

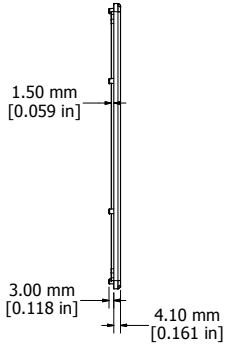

Enclosures can be Factory Modified (Milling, Drilling, Printing etc.)
Contact Factory mjm@hammondmfg.com for quotes
Solid models of this enclosure available in STEP or IGES.

NOTE
Purchased assembly includes box, lid, and 6 cover screws. Box and lid are made from Diecast Aluminum Alloy. EVA Foam Gasket supplied with Liquid Resistant Enclosures

PART NUMBERS	
1550J Enclosure	
Unfinished	1550J
Black Textured Polyester Powder Paint	1550JBK
1550WJ Liquid Resistant Enclosure (Silicon Factory Installed Gasket)	
Unfinished	1550WJ
Black Textured Polyester Powder Paint	1550WJBK
Accessories	
Recommended Torque: 75 ozf.in / 55 cN.m	
Unfinished Cover Screws (Pkg 100) [M3.5 x 0.6 18-8 SS]	1550MS100
Black Cover Screws (Pkg 100) [M3.5 x 0.6 18-8 SS]	1550MS100BK

HAMMOND MANUFACTURING™

1550J

www.hammondmfg.com