SKF

SNL plummer block housings solve the housing problems

Revised edition



Made by SKF® stands for excellence. It symbolises our consistent endeavour to achieve total quality in everything we do. For those who use our products, “Made by SKF” implies three main benefits.

Reliability – thanks to modern, efficient products, based on our worldwide application know-how, optimised materials, forward-looking designs and the most advanced production techniques.

Cost effectiveness – resulting from the favourable ratio between our product quality plus service facilities, and the purchase price of the product.

Market lead – which you can achieve by taking advantage of our products and services. Increased operating time and reduced down-time, as well as improved output and product quality are the key to a successful partnership.



Contents

1 Product information 3

Fewer bearing replacements and less maintenance... 3
Plummer block housings have much to offer 3
SNL plummer block housings have more to offer 3
One basic design – many variants 4
Costs and risks – at a low level 6
High performance for all sectors 8

2 Recommendations 10

Bearing arrangement design 10
Bearings on adapter sleeves on smooth shafts 10
Bearings on adapter sleeves on stepped shafts 11
Bearings on withdrawal sleeves on stepped shafts 12
Bearings on cylindrical seatings on stepped shafts 13
Standard seals 14
Special seals 21
End covers 22
Locating rings 22
Axial displacement using CARB bearings in SNL housings 24
Application advice for trouble-free operation 26
Lubrication 28
Mounting 30
Mounting SNL housings with double-lip seals 34
Mounting SNL housings with V-ring seals 36
Mounting SNL housings with felt seals 38
Mounting SNL housings with labyrinth seals 40
Mounting SNL housings with taconite seals 42
Mounting SNL housings with oil seals 44

3 Product data 46

Designations and housing data 46
Designations 46
Load carrying ability 47
Product tables 50
SNL plummer block housings for bearings on adapter sleeve 50
SNL plummer block housings for bearings with cylindrical bore 62
Sealing arrangements for SNL plummer block housings .. 72

Other products for trouble-free operation 76

The SKF Group – a worldwide corporation 82

Fewer bearing replacements and less maintenance

Plummer block housings have much to offer

The main benefit of split plummer block housings is their easy installation; pre-assembled shafts can be mounted in them. When the housing bases are attached to the base plate it is then only necessary to place the housing caps in position and to tighten the attachment bolts to complete the installation.

Split plummer block housings available on the market are mainly intended for self-aligning ball bearings, spherical roller bearings and CARB® bearings of ISO Dimension Series 02, 03, 22, 23 and 32. They can often be fitted with various different seals. Many designs and variants of split plummer block housings are available making the use of tailored housings unnecessary and thus enabling cost effective bearing arrangements to be made.

For many years SKF has been one of the leading producers of split plummer block housings – synonimous with operational reliability, quality and versatility.

SNL plummer block housings have more to offer

SKF has developed the SNL plummer block housings to be the first choice for design, quality and economy. This enables customers to keep a step ahead.

SNL plummer block housings enable the full service life potential of the incor16porated bearings to be exploited with less need of maintenance. This supports user efforts to further reduce maintenance costs. Among other characteristics the housings are very stiff, making them insensitive to uncontrolled and excessive tightening of the attachment bolts.

Another benefit is the choice of oil or grease lubrication for the bearings housed in SNL plummer blocks. A range of efficient seals for oil lubrication and rough environments make for trouble-free operation.



One basic design – many variants

SNL plummer block housings are primarily intended for self-aligning ball bearings, spherical roller bearings and CARB bearings. The housings are designed on a "building block" principle. This enables a more generous choice of bearing, shaft mounting, seals and type of lubrication. Stocking is also simplified.

A building block system
The basis of the SNL plummer block housing system consists of a number of housings of the same design but in different sizes. By combining these housings with the different standard seals a wide variety of housing variants, all belonging to the standard range, can be supplied to cover the majority of demands for plummer blocks for shafts having diameters of 20 to 160 mm, inclusive. The standard range also covers other variants, for example, housings with drilled and tapped holes for lubrication nipples or condition monitoring sensors. Housings are also available for bearings for larger shaft diameters (➔ **page 79**).

SNL plummer block housings are made of grey cast iron and demonstrate high strength. Should, however, this strength be inadequate, dimensionally equivalent plummer block housings of spheroidal graphite cast iron can be supplied.

Several sealing options
An important advantage of the SNL plummer block housings is that they can be fitted with a variety of seals. The standard seals supplied by SKF comprise double-lip seals, V-ring seals, felt seals, labyrinth seals and heavy-duty "taconite" seals as well as end covers. Other standard seals are also available for SNL housings, but these are supplied together with the housings as the housing has to be modified to take them. These are oil seals and heavy-duty axial taconite seals.

SNL plummer block housings are fully interchangeable with the earlier SNH housings. Their dimensions conform to ISO 113:1994.

Painting system
SNL plummer block housings are painted as standard in accordance with ISO 12944-2, environmental Class C2. Black colour: RAL 9005.

SNL plummer block housing with sealing options


ASNH
SKF
511-609

Costs and risks – at a low level

SNL plummer block housings have several advantages, such as the high load carrying capacity and machining quality as well as the wide variety of sealing alternatives with the following design and performance characteristics.

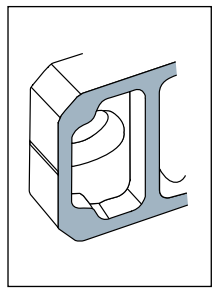

Stiff design
The housing base is reinforced with ribs and extra material surrounding the holes for the attachment bolts in order to provide improved seating on the base plate. The attachment bolts can be preloaded to give correct location and prevent deformation of the housing base and bore.

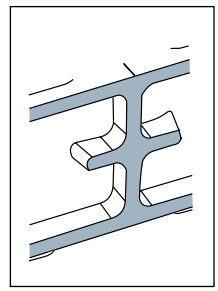

Excellent heat conduction
The web (rib) reinforcement of the housing base enlarges the contact area between base and base plate and allows for an improved heat flow from the bearing outer ring to the base plate. The bearings will run 5 to 10 % cooler than in other housings.

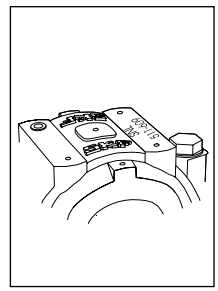

Drilled and tapped hole with nipple
SNL housings have a drilled and tapped hole as standard in the cap. The hole is protected by a plastic plug. The nipple is supplied, together with a nipple protecter, with the housing (packed inside). If the application is such that relubrication is required it is only necessary to screw the nipple into the hole and lubricant can be supplied to one side of the bearing.

• Stiff design	Insensitive to uncontrolled tightening of the attachment bolts, low operating temperatures
• Excellent heat conduction	Low bearing temperatures, high speed operation possible with oil lubrication, long relubrication intervals, long service life, low lubricant consumption
• Drilled and tapped hole with nipple	Relubrication facility as standard
• Caps and bases individually marked	Avoids mixing of caps and bases, permits traceability
• Indications for holes to take other components	Simple and easy adaptation of standard housing to individual applications, easy attachment of condition monitoring equipment
• Simple mounting	Simple and reliable mounting and maintenance
• Additional seals	Several sealing options, long bearing service lives

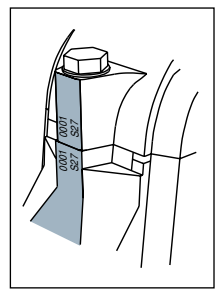

Caps and bases individually marked
The housing base and cap are matched during manufacture and are not interchangeable with the caps and bases of other housings. To prevent mixing caps and bases when mounting several housings, the same consecutive number is marked on the cap and base of each individual housing.

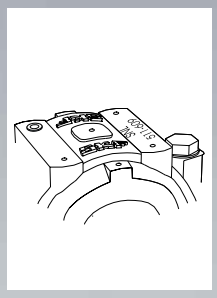

Indications for holes to take other components
SNL housings can be fitted with sensors serving permanently installed condition monitoring equipment based on vibration measurements. The positions where holes can be drilled to take these sensors are indicated on the housing.

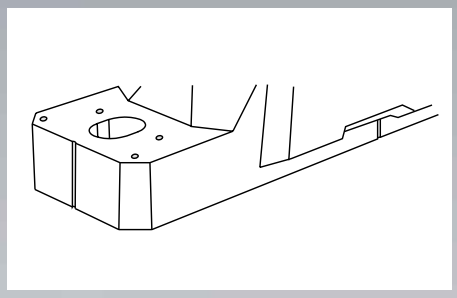

Simple mounting
In order to simplify mounting and make alignment more accurate, cast indications, which are vertical to the centre of the bore of the housing, are provided on the end faces as well as on the side faces of the housing base. Mounting instructions, included with each seal pack, give valuable tips.

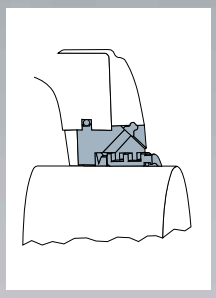

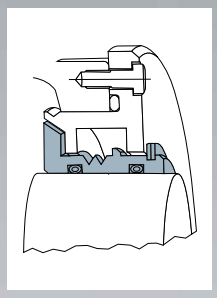

Additional seals
Two new seal designs have been developed specifically for SNL housings. One is intended for difficult conditions which call for a robust seal which can be relubricated and the other is for high speeds and oil lubrication.



High performance for all sectors

High load carrying capacity and reliability, easy maintenance, the variety of applications and robust designs have made SKF housings a must. The most important sectors of industry and their demands are listed below.

One important reason for the popularity of SKF housings is the increased awareness of the impact of enhanced quality on the cost of a machine and its total life.



Industry

- Pulp and paper
- Metallurgical
- Mining and construction
- Fluid machinery
- Materials handling
- Handling systems

Demands

- Long service life
- Robust design
- Long relubrication intervals
- Ready for relubrication
- Condition monitoring facilities
- Avoid risk of mixed caps
- Fast and easy mounting and dismounting

Solution











Bearing arrangement design

SNL plummer blocks can be used with self-aligning ball bearings, spherical roller bearings or CARB bearings fitted on smooth (plain) or stepped shafts; the bearings can be mounted on adapter or withdrawal sleeves or directly on cylindrical shaft seatings. The plummer blocks can also be used with other bearing types of suitable Dimension Series.

1. Bearings on adapter sleeves on smooth shafts

Advantages

- Drawn round bar (tolerance h9) can be used without machining
- Maximum shaft strength as there is no weakening by shoulders or reliefs
- Bearings can be mounted at any position on the shaft
- Mounting force, i.e. the force required to drive up the bearing on to the sleeve, is some 40 % smaller than with other bearing arrangements on sleeves because friction occurs only in one contact
- Bearing radial clearance can be adjusted within certain limits during mounting to meet application demands

Applications

- Bearing arrangements for relatively long shafts where more than two bearings are required for support
- Bearings arrangements where machine components are mounted using wedging or tensioning components which do not require the shaft to be machined
- Bearing arrangements where the final position of the bearing cannot be accurately determined

Bearings on adapter sleeves on smooth shafts

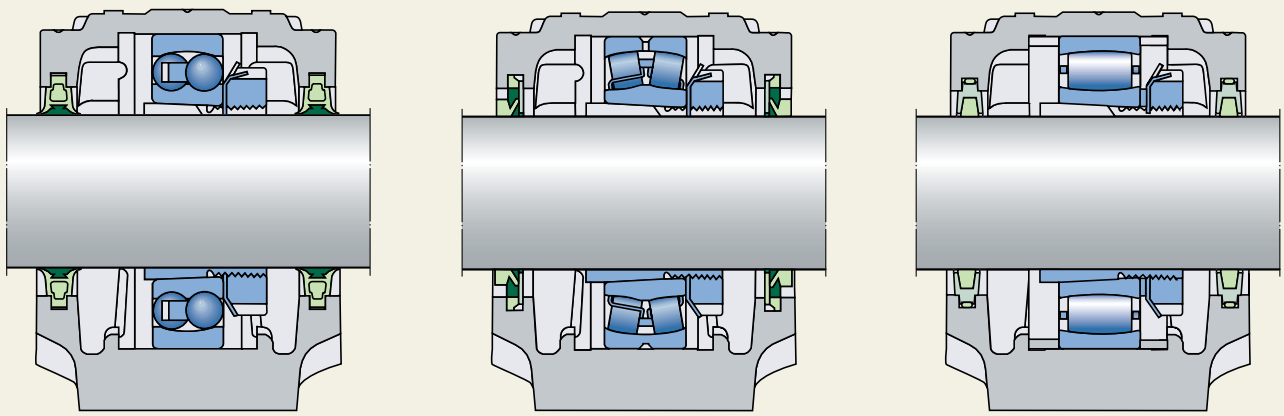

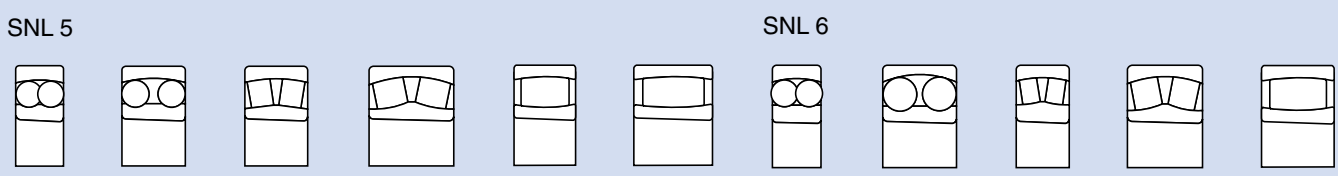

2. Bearings on adapter sleeves on stepped shafts

Advantages

- The bearing position on the shaft is accurately determined by the abutment ring
- Other components on the shaft can be axially located by the bearing on its sleeve via spacer sleeves
- Easy dismounting as the bearing inner ring is in contact with the abutment ring
- Bearing radial clearance can be adjusted within certain limits during mounting to meet application demands

Applications

- Bearing arrangements at shaft ends
- Bearing arrangements where frequent mounting and dismounting are required

Bearings on adapter sleeves on stepped shafts

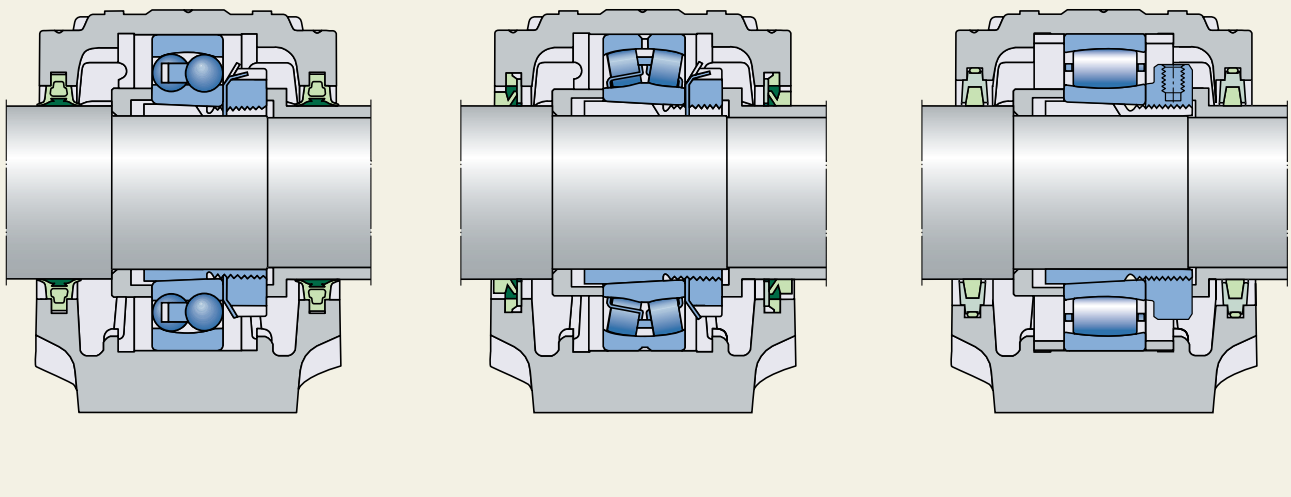

SNL 5 SNL 6

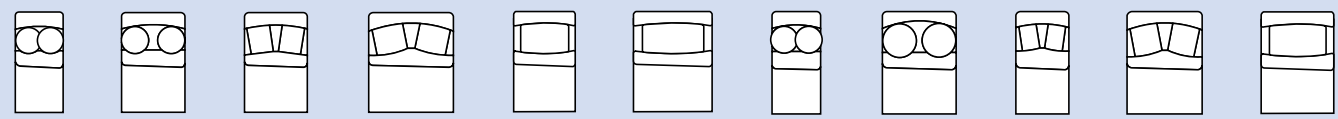

12 EK 22 EK 222 EK 232 CCK C 22 K C 32 K 13 EK 23 EK 213 CCK 223 EK C 23 K

3. Bearings on withdrawal sleeves on stepped shafts

Advantages

- The bearing position on the shaft is accurately determined by the shaft shoulder
- Other components on the shaft can be axially located by the bearing on its sleeve via spacer sleeves
- Easy dismounting using a withdrawal or hydraulic nut
- Bearing radial clearance can be adjusted within certain limits during mounting to meet application demands

Applications

- Bearing arrangements at shaft ends
- Bearing arrangements where frequent mounting and dismounting are required

Bearings on withdrawal sleeves on stepped shafts

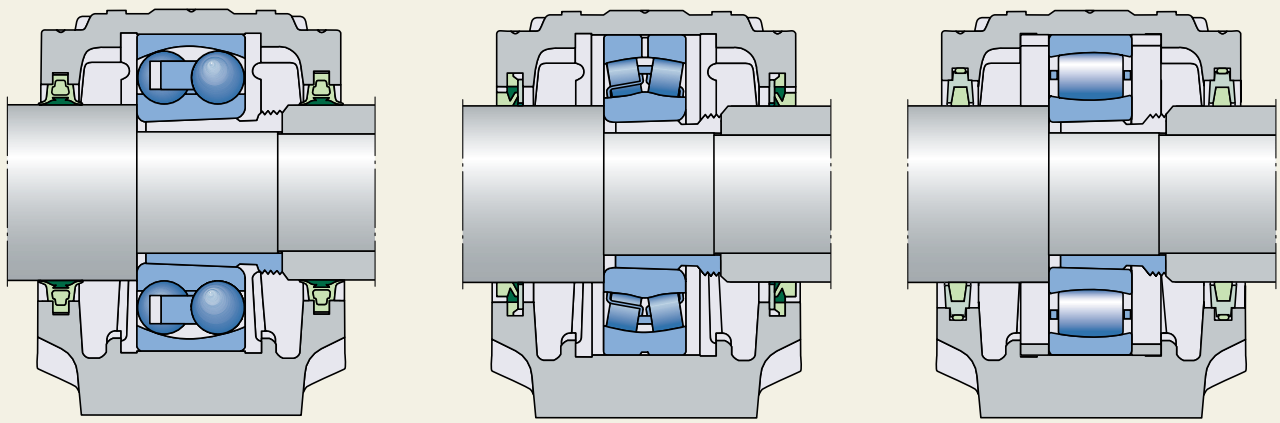

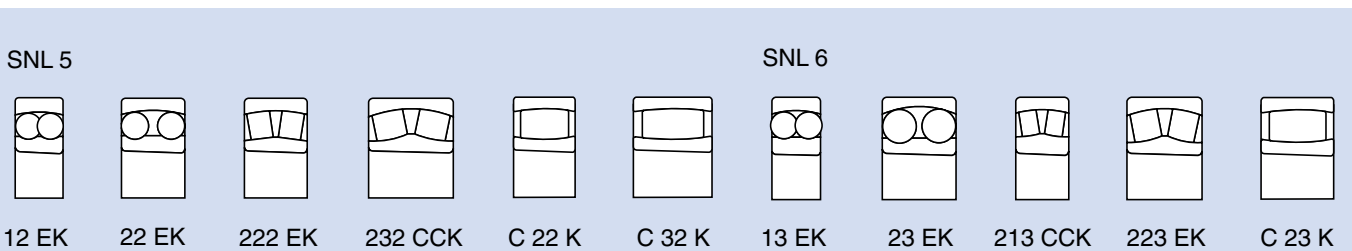

4. Bearings on cylindrical seatings on stepped shafts

Advantages

- The axial load carrying capacity of the bearings (in both directions) is not limited by a sleeve
- The residual bearing internal clearance is determined by the tolerance of the shaft seating so there is no danger of radially preloading the bearing during mounting
- The bearing position on the shaft is accurately determined by the shaft shoulder
- The bearing can be supported by other components via spacer sleeves
- The shaft diameter at the bearing position is maximised

Applications

- Bearing arrangements where large numbers of bearings have to be mounted
- Bearing arrangements where large shock loads can occur

Bearings on cylindrical seatings on stepped shafts

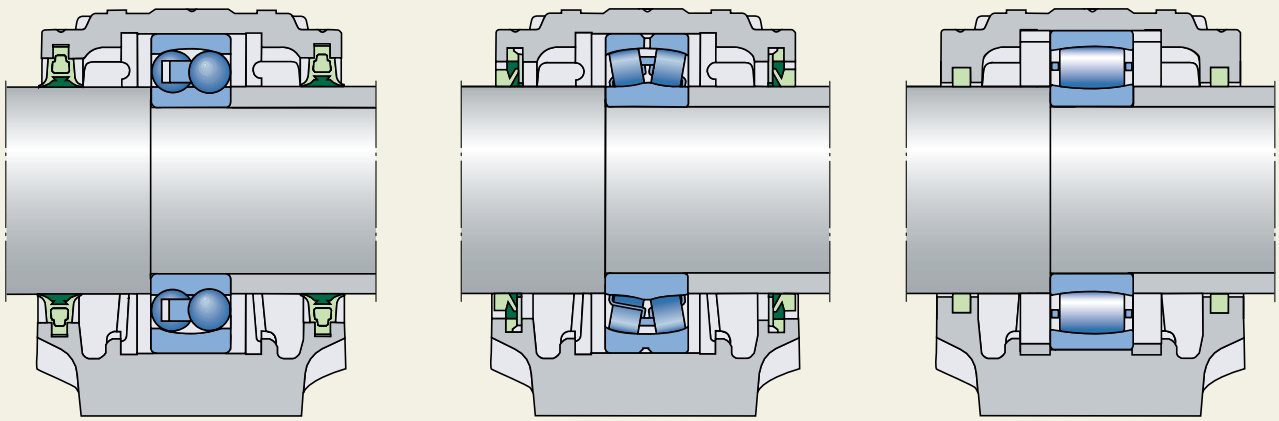

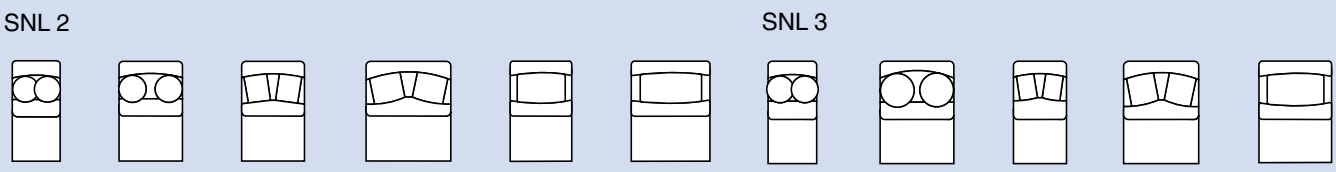

Standard seals

An important advantage of SNL plummer block housings is that they can be fitted with different types of seal. The standard seals available from SKF are split double-lip seals and felt seals, one-piece V-rings, labyrinth seals and the heavy-duty “taconite” seals. The seals are easy to install and are supplied separately.

All the standard seals as well as the seals for use with oil lubrication are presented in **Table 1**, which gives a comprehensive overview of the seal types, their design features and their suitability for various operating conditions. Detailed information on the various standard and special seals including properties and availability will be found on **pages 16** to **21**.

Seal selection

Table 1

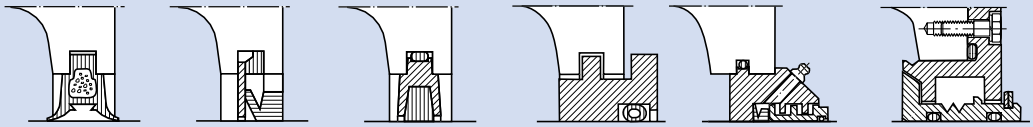

	TSN .. G	TSN .. A	TSN .. C	TSN .. S	TSN .. ND	TSN .. TURU[1)]
Internal conditions						
Temperature, °C	–40 to +100	–40 to +100	–40 to +100	–50 to +200	–40 to +100	–40 to +200
Peripheral speed, m/s	up to 8	up to 7 above 7[2)]	up to 4	++	up to 12	++
Misalignment, degrees	0,5 to 1	1 to 1,5	up to 0,5	up to 0,3	up to 0,5	up to 1
Relubrication grease	4 m/s[3)]	++[4)]	-	+	+	
Oil lubrication	-	-	--	-	-	++
Low friction	+	++	-	++	+	++
Axial shaft displacement	++	-	++	+	+	-
Vertical mounting	+	++[5)]	--	--	-	--
Replacement	++	-	+	-	-	-
External conditions						
Dust	++	+	+	+	++	-
Sand	++	+	-	+	++	+
Grit	+	-	-	+	++	+
Sharp objects, chipping splinters etc	+	--	+	++	++	++
Liquids when sprayed	+	+	-	--	++	-
Direct sunshine	+	--	++	++	++	++

Symbols: ++ very suitable, + suitable, - limited suitability, -- unsuitable

[1)] Delivered as a complete unit only, i.e. housing with seals
[2)] When V-ring axially supported
[3)] When using housing with grease escape hole (suffix V)
[4)] If appropriate components are used: ASNA .. V
[5)] When the V-ring of the lower seal is mounted inboard

Permissible shaft speeds for rubbing seals

Table 2

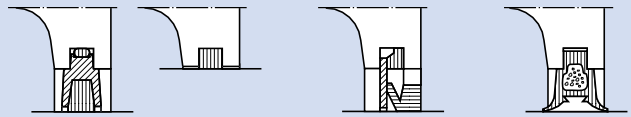

C design felt seals | A design V-ring seals | G design double-lip seals

Shaft diameter	Guideline values for the permissible shaft speed[1] for standard seals of design		
d_a, d_b	C[2]	A	G
mm	r/min		
20	3 820	6 680	7 640
25	3 060	5 350	6 110
30	2 550	4 460	5 090
35	2 180	3 820	4 360
40	1 910	3 340	3 820
45	1 700	2 970	3 390
50	1 530	2 670	3 060
55	1 390	2 430	2 780
60	1 270	2 230	2 550
65	1 180	2 060	2 350
70	1 090	1 910	2 180
75	1 020	1 780	2 040
80	960	1 670	1 910
85	900	1 570	1 800
90	850	1 490	1 700
95	800	1 410	1 610
100	760	1 340	1 530
110	690	1 220	1 390
115	660	1 160	1 330
120	640	1 110	1 270
125	610	1 070	1 220
130	590	1 030	1 180
135	570	990	1 130
140	550	960	1 090
145	530	920	1 050
150	510	890	1 020
155	490	860	990
160	480	840	960
165	460	810	930
170	450	790	900

The speeds are valid when the seals are operated at temperatures between –40 and +100 °C (permissible temperature range). At temperatures outside this range and/or at speeds higher than those given, labyrinth seals should be used.

[1] The guideline values are based on the permissible sliding speed at the seal/counterface contact. However, the permissible shaft speed is determined by the speed rating for the bearing to be used in the housing
[2] The guideline values are based on a peripheral speed of 4 m/s. Higher speeds are possible, see under “Felt ring seals”

Double-lip seals

Double-lip seals (➔ **fig** 1) are made of polyurethane, a wear-resistant material which has good elastic properties. The seals are split so that they are easy to fit. They are intended for grease lubrication and can be used at peripheral speeds of up to 8 m/s. The permissible angular misalignment is approximately 1° for shaft diameters up to approximately 100 mm and 0,5° for larger sizes. The seal counterface on the shaft should be ground and the surface roughness R_a should not exceed 3,2 µm. The recommended shaft tolerance is h9. When using housings with grease escape hole (suffix V) the speed limit is 4 m/s due to increased pressure on the inner seal lip.

The axial movement of the shaft relative to the housing is not limited when double-lip seals are used.

The double-lip seals are always supplied in packs of two seals. When housings are used at shaft ends, i.e. with one end cover, one of the seals will be left over and can be kept as a spare. The double lip seals are identified by the designation prefix TSN followed by the size identification and the suffix G, e.g. TSN 511 G.

V-ring seals

The V-ring seals (➔ **fig** 2) consist of a V-ring and a sheet steel sealing washer with vulcanised rubber lip which fits into the sealing groove in the housing. The washer is protected against corrosion. The V-rings are made of nitrile rubber (NBR) and have a slim sealing lip which seals axially against the sealing washer. The V-ring "body", which sits tightly on the shaft and rotates with it, also serves as a flinger. V-ring seals provide efficient sealing even under difficult operating conditions such as high speeds, rough finished shafts etc. They can be operated at peripheral speeds in excess of 7 m/s if the V-ring is prevented from moving or lifting from the shaft by a support ring. Recommended dimensions for appropriate support rings (for axial and radial location) are given in **Table** 3.

The permissible angular misalignment for V-ring seals is approximately 1,5° for a 50 mm shaft decreasing to approximately 1° for a shaft diameter of 150 mm and above. The axial movement of the shaft relative to the housing is limited to ±1 mm for shaft diameters up to 65 mm and to approximately ±1,2 mm for larger shaft diameters.

The V-ring seals are always supplied in packs of two seals. When housings are used at shaft ends, i.e. with one end cover, one of the seals will be left over and can be kept as a spare. The V-ring seals are identified by the designation prefix TSN followed by the size identification and the suffix A, e.g. TSN 511 A.

Double-lip seal

Fig 1

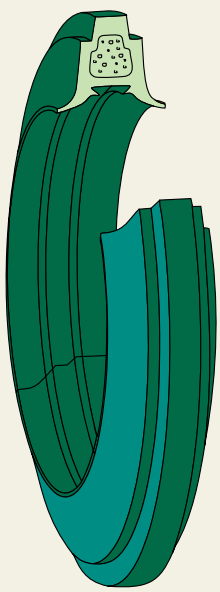

V-ring seal

Fig 2

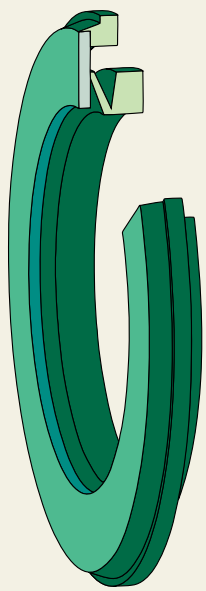

Location of V-ring

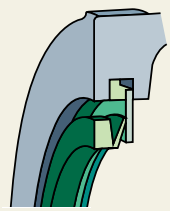

Peripheral speed up to 7 m/s

Peripheral speed 7 to 12 m/s

above 12 m/s

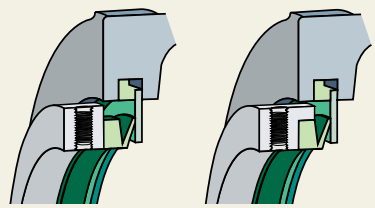

Recommended dimensions for support rings for V-ring seals

Table 3

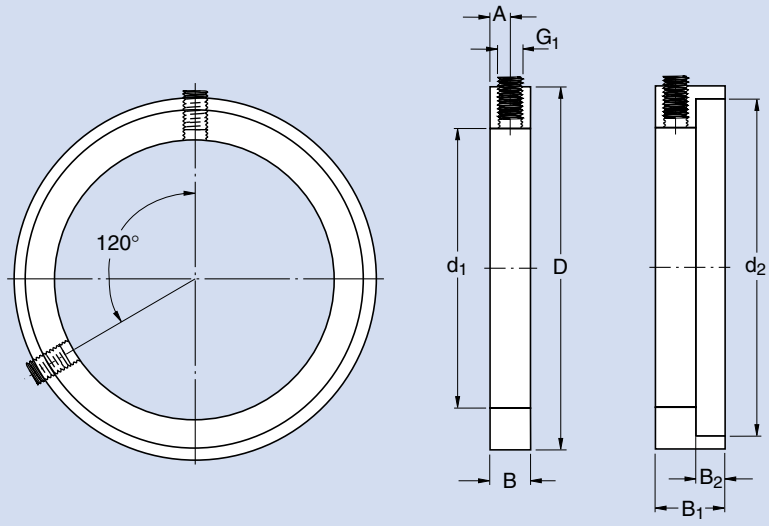

Shaft diameter	Dimensions								Grub screw to DIN 913	V-ring Designation
d_a, d_b	d_1	d_2	B	B_1	B_2	D	A	G_1		
mm	mm								–	–
20	20	27,2	5	8,5	3,5	30	2,5	M3	3 × 5	CR 400200
25	25	32,1	5	8,5	3,5	35	2,5	M3	3 × 5	CR 400250
30	30	37,2	5	8,5	3,5	40	2,5	M3	3 × 5	CR 400300
35	35	42,2	5	8,5	3,5	45	2,5	M3	3 × 5	CR 400350
40	40	49,1	7	11,5	4,5	53	3,5	M4	4 × 5	CR 400400
45	45	54	7	11,5	4,5	58	3,5	M4	4 × 5	CR 400450
50	50	59,1	7	11,5	4,5	63	3,5	M4	4 × 5	CR 400500
55	55	64,1	7	11,5	4,5	68	3,5	M4	4 × 5	CR 400550
60	60	69,1	7	11,5	4,5	73	3,5	M4	4 × 5	CR 400600
65	65	74,1	7	11,5	4,5	78	3,5	M4	4 × 5	CR 400650
70	70	81	9	15	6	84	4,5	M5	5 × 6	CR 400700
75	75	86	9	15	6	89,5	4,5	M5	5 × 6	CR 400750
80	80	91	9	15	6	94,5	4,5	M5	5 × 6	CR 400800
85	85	96	9	15	6	100	4,5	M5	5 × 6	CR 400850
90	90	101	9	15	6	105	4,5	M5	5 × 6	CR 400900
95	95	106	9	15	6	109	4,5	M5	5 × 6	CR 400950
100	100	111	9	15	6	115	4,5	M5	5 × 6	CR 401000
110	110	122,9	10	17,5	7,5	128	5	M6	6 × 8	CR 401100
115	115	127,4	10	17,5	7,5	133	5	M6	6 × 8	CR 401100
125	125	138,1	10	17,5	7,5	143	5	M6	6 × 8	CR 401300
135	135	147,5	10	17,5	7,5	153	5	M6	6 × 8	CR 401300
140	140	152,9	10	17,5	7,5	158	5	M6	6 × 8	CR 401400
145	145	158,1	10	17,5	7,5	163	5	M6	6 × 8	CR 401500
155	155	167,5	10	18,5	8,5	173	5	M6	6 × 8	CR 401500
165	165	179,9	10	18,5	8,5	185,5	5	M6	6 × 8	CR 401700
175	175	189,3	10	18,5	8,5	195	5	M6	6 × 8	CR 401700

Felt ring seals

Felt ring seals (➔ **fig** 3) are simple but efficient seals for use with grease lubrication. They can be operated at peripheral speeds up to 4 m/s. The seals can be used at much higher speeds but at high speeds a small gap will be formed between the felt and the shaft and the seal becomes a non-rubbing gap-type seal. For plummer block housings with bearings on adapter sleeves on smooth shafts the felt ring seals are split. The impregnated felt is inserted in light alloy half-rings. It is only necessary to insert the seals in the grooves in the housing. The rubber O-section cords should be put into the grooves first as they prevent the seal rings from turning.

SNL plummer block housings for bearings mounted on cylindrical seatings on stepped shafts, sizes 205 to 218 inclusive, can also be supplied with felt seals. In this case the seals consist of loose felt strips which can be inserted in the sealing grooves. Before mounting, the FS felt strips should be left to soak for a few minutes in hot oil.

For applications with spherical roller bearings or CARB bearings which are to operate at continuously high temperatures up to approximately +250 °C, SKF graphited FSB sealing strips made of aluminium boron silicate can be used. They are suitable for peripheral speeds up to 2 m/s. The strips have been well proven as seals on autoclave trucks. Reference should be made to the publication 4402 “SKF deep groove ball bearings for extreme temperatures cut machine life cycle costs” which will be sent on request.

The permissible angular misalignment is approximately 0,5°. The seal counterface on the shaft should be ground and the surface roughness R_a should not exceed 3,2 µm.

The axial movement of the shaft relative to the housing is not limited when felt seals are used.

The ready-to-mount felt ring seals (in light alloy half-rings) are always supplied in packs of two seals. When housings are used at shaft ends, i.e. with one end cover, one of the seals will be left over and can be kept as a spare. The felt ring seals are identified by the designation prefix TSN followed by the size identification and the suffix C, e.g. TSN 511 C.

The felt ring seals can also be supplied with an FSB insert. The rubber O-section cords are replaced by fluoro rubber O-section cords. These seals are identified by the suffix CB, e.g. TSN 511 CB.

Felt ring seal

Fig 3

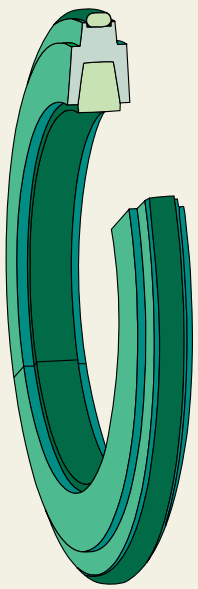

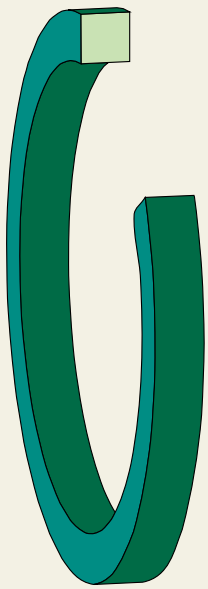

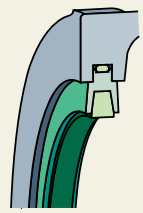

Ready-to-mount felt ring seal

Felt strips

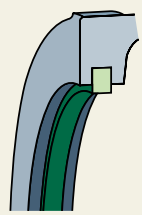

Labyrinth seals

Under difficult operating conditions and/or at high speeds the use of labyrinth seals (➔ **fig** 4) is recommended. The labyrinth rings are made of steel and have two radially arranged labyrinth steps which form a narrow sealing gap with the housing grooves.

Hollow O-ring cords of silicone rubber (supplied with the seals) ensure that the labyrinth rings, which are mounted with a loose fit, rotate with the shaft. Angular misalignments of the shaft up to approximately 0,3° are permissible. The operating temperature range for the labyrinth seals is –50 to +200 °C.

When labyrinth seals are used, axial movement of the shaft relative to the housing is not limited. The recommended shaft tolerance is h9.

The labyrinth seals are supplied singly. For bearing arrangements for through shafts it is therefore necessary to order two rings. The labyrinth seal is identified by the prefix TSN followed by the size identification and the suffix S, e.g. TSN 511 S.

Taconite heavy-duty seals

Taconite is a very fine-grained mineral which is extremely difficult to seal against. For bearing arrangements which must operate under very arduous conditions such as those encountered in mining, labyrinth seals which can be relubricated are recommended, as grease enhances the sealing effect and extends the serviceability of the seals. SKF has developed two different designs of these heavy-duty seals (which can seal against taconite, hence the name) which can be supplied for use with SNL housings.

The one taconite seal design (➔ **fig** 5) is based on a radial labyrinth seal and fits the standard housings. A V-ring seal mounted on the shaft seals against the non-rotating part of the seal, which is inserted in the seal groove and prevents contaminants from penetrating to the bearing when the seal is relubricated. This grease is supplied via a grease nipple in the non-rotating part of the seal. Angular misalignments of the shaft of up to approximately 0,5° are possible. The permissible operating temperature range for the seal is between –40 and +100 °C.

The axial movement of the shaft relative to the housing is limited for this type of taconite seal to ±1 mm for shaft diameters up to 65 mm and to approximately ±1,2 mm for sizes up to 100 mm and ±1,5 mm for larger shaft diameters. The recommended shaft tolerance is h9.

These seals are supplied singly so that for housings used on through shafts, it is necessary to order two seals. The seal is identified by the prefix TSN followed by the size identification and the suffix ND, e.g. TSN 511 ND.

The other design of taconite seal (➔ **fig** 6) is based on a labyrinth seal with the labyrinth stages arranged axially and does not fit the standard housings. The seal is relubricated via lubrication holes and nipples in the housing cap. The positions for the holes are marked by dimples in the casting. The permissible misalignment of the shaft relative to the housing for this seal is approximately 0,5°. The operating temperature range is from

Labyrinth seal

Fig 4

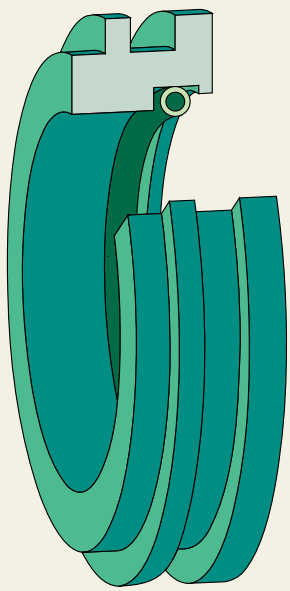

Taconite heavy-duty seal

Fig 5

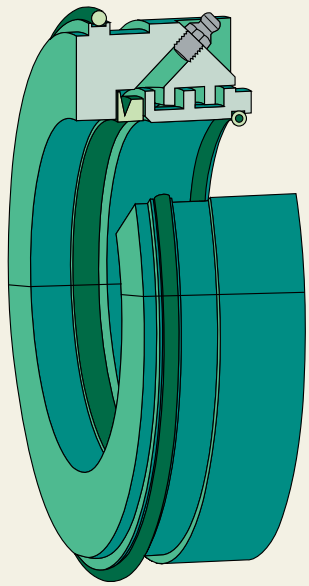

Taconite heavy-duty seal

Fig 6

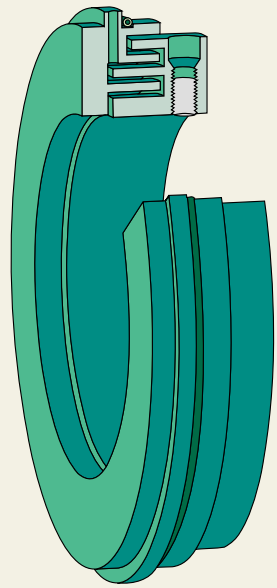

–40 to +250 °C. Axial movement of the shaft relative to the housing is also limited. The recommended shaft tolerance is h9.

The modified SNL housings are always supplied together with the seals and are available from size 515-612. The housings with seals are identified by the designation suffix TNC, e.g. SNL 515 TNC or SNL 612 TNC. A housing intended for a shaft end with one seal and one end cover is identified by an additional suffix A, e.g. SNL 515 ATNC. The seal itself is designated TSN .. NC.

A variant of the TNC seal with an additional V-ring can also be supplied. The seal is identified by the letters TNB and can be supplied to order.

Seals for oil lubrication

Special seals (oil seals) are required to prevent oil from escaping from the housing when oil lubrication is applied. For SNL housings, SKF has developed the non-rubbing seal of the U design (➔ **fig** 7). These U seals also require modified housings and comprise two parts: one which is stationary and is screwed to the housing and the other which is mounted on the shaft and rotates. A hollow O-ring cord of silicone rubber inserted between the labyrinth ring and the shaft ensures that the ring, which is mounted with a loose fit, rotates with the shaft, and oil cannot escape along the shaft. These oil seals do not limit axial movement of the shaft relative the housing. The recommended shaft tolerance is h9.

The modified SNL housing is supplied together with the seals as a unit. The housings with seals are identified by the suffix TURU, e.g. SNL 524 TURU. Special end covers can be supplied separately on request, designation ASNH .. R.

Oil seal

Fig 7

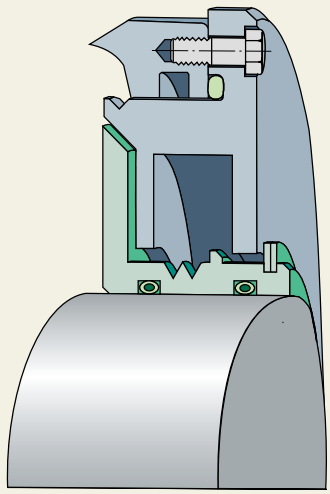

Special seals

Applications where, for some reason or other, the standard seals cannot be used must be fitted with special seals. The SNL housings can be supplied without seals for such applications and are relatively easy to equip with special seals. It is recommended that housings of series SNL 2 are used rather than those of series SNL 5-6 as they have a comparatively larger bore at the shaft entrance. There is therefore more room to accommodate a seal, so that there is more choice as regards seal design.

Special seals are not normally supplied by SKF. Therefore, the relevant housing dimensions are given in **Table 4**.

Sealing groove dimensions

Table 4

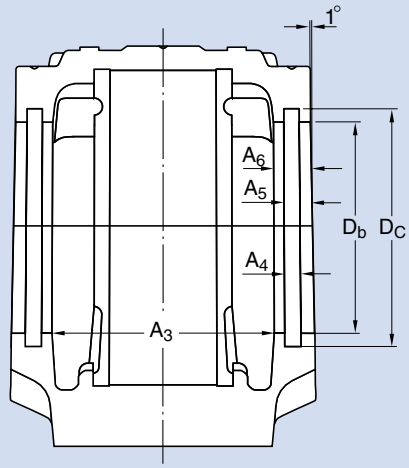

Housing Size	Dimensions A_3	A_4	A_5	A_6	D_b	D_c
–	mm					
SNL 205	44	5	7,5	10	36,5	44,5
SNL 206-305	54	5	7,5	10	46,5	54,5
SNL 207	58	5	8	11	56,5	64,5
SNL 208-307	61	5	8	11	62	70,5
SNL 209	59	5	9	12	67	75,5
SNL 210	64	5	9	12	72	80,5
SNL 211	69	5	9	12	77	85,5
SNL 212	79	5	9	12	87	95,5
SNL 213	82	5	9	13	92,5	101
SNL 215	87	5	9	13	102,5	111
SNL 216	92	5	9	13	108	116,5
SNL 217	97	5	9	13	112	120,5
SNL 218	112	5	9	13	120	128,5
SNL 505	45	5	7,5	10	31,5	39,5
SNL 506-605	55	5	7,5	10	36,5	44,5
SNL 507-606	59	5	8	11	46,5	54,5
SNL 508-607	62	5	8	11	51,5	59,5
SNL 509	60	5	9	12	56,5	64,5
SNL 510-608	65	5	9	12	62	70,5
SNL 511-609	70	5	9	12	67	75,5
SNL 512-610	80	5	9	12	72	80,5
SNL 513-611	83	5	9	13	77	85,5
SNL 515-612	88	5	9	13	87	95,5
SNL 516-613	93	5	9	13	92,5	101
SNL 517	98	5	9	13	97,5	106
SNL 518-615	113	5	9	13	102,5	111
SNL 519-616	116	6	10	14	131	141
SNL 520-617	131	6	10	14	137,5	147,5
SNL 522-619	143	6	10	14	147,5	157,5
SNL 524-620	151	6	11	15	157,5	167,5
SNL 526	156	6	11	15	167,5	177,5
SNL 528	171	6	11	15	177,5	187,5
SNL 530	189	6	11	15	192,5	202,5
SNL 532	201	6	11	15	202,5	212,5

End covers

For housings mounted at the ends of shafts, the one opening should be fitted with an end cover which fits into the seal groove (➔ **fig** 8). Details of the permissible length of the shaft end can be found in **Table** 5. The end covers are of plastic and are suitable for operating temperatures in the range –40 to +110 °C.

At higher temperatures sheet steel end covers should be used instead. These can be cut out from steel sheet and should be inserted with a hollow O-ring cord of silicone rubber in the seal groove in the housing. The relevant seal groove dimensions are given in **Table** 4.

The standard end cover of plastic is designated by the prefix ASNH followed by the housing size identification, e.g. ASNH 511-609.

Locating rings

The bearing seating in the housing is sufficiently wide to enable the bearing to be displaced axially. Bearings which are to locate a shaft axially in both directions (locating bearings) must always be fixed axially in position in the housing bore by locating rings at both sides (➔ **fig** 9).

CARB bearings are non-locating bearings and cannot take axial loads. Since axial displacement is accommodated within a CARB bearing (together with any misalignment) it is necessary to locate the outer ring axially in its seating by inserting a locating ring at each side of the bearing.

The locating rings are identified by the prefix FRB followed by figures giving the width/outside diameter in millimetres, e.g. FRB 11.5/100.

Housing with end cover

Fig 8

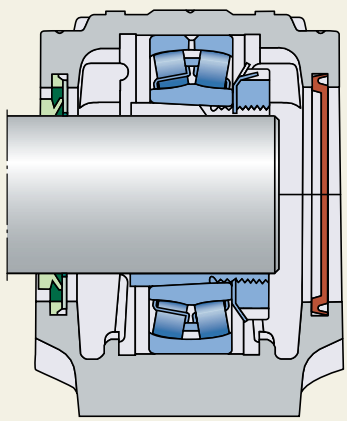

Housing with locating rings at both sides of bearing

Fig 9

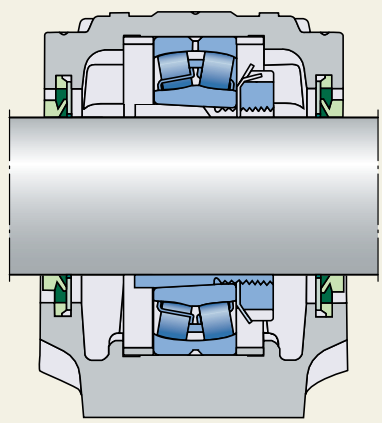

Premissible length of shaft end

Table 5

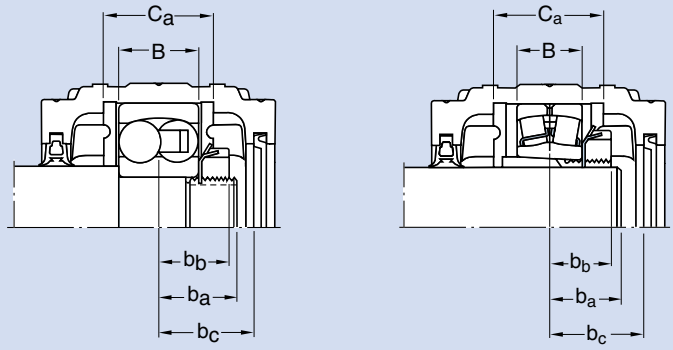

Housing Size	Dimensions			Widest bearing to fit housing		
				Designation	Dimensions	
	b_a [1]	b_c	C_a		B	b_b
–	mm			–	mm	
SNL 205	18	24	25	**22205 CC/W33**	18	17
SNL 206-305	20	29	32	**22206 CC/W33**	20	18
SNL 207	23	32	34	**22207 CC/W33**	23	20,5
SNL 208-307	26 (22)	33	39	**22208 E**	23	21,5
SNL 209	25	32	30	**22209 CC/W33**	23	22,5
SNL 210	28 (24)	35	41	**22210 CC/W33**	23	23,5
SNL 211	30 (25)	37	44	**22211 E**	25	25
SNL 212	33 (26)	42	48	**22212 E**	28	27
SNL 213	35 (30)	45	51	**22213 CC/W33**	31	29,5
SNL 215	37 (30)	47	56	**22215 E**	31	30,5
SNL 216	39 (33)	50	58	**22216 E**	33	33,5
SNL 217	40 (35)	52	61	**22217 E**	36	36
SNL 218	45 (35)	60	65	**23218 CC/W33**	52,4	44,2
SNL 505	18	24	25	**22205 CCK/W33**	18	17
SNL 506-605	20	29	32	**2305 EK**	24	19
SNL 507-606	23	32	34	**2306 K**	27	21,5
SNL 508-607	26 (22)	33	39	**2307 EK**	31	24,5
SNL 509	25	32	30	**22209 CCK/W33**	23	22,5
SNL 510-608	28 (24)	35	41	**22308 CCK/W33**	33	26,5
SNL 511-609	30 (25)	37	44	**22309 CCK/W33**	36	29
SNL 512-610	33 (26)	42	48	**22310 EK**	40	32
SNL 513-611	35 (30)	45	51	**22311 EK**	43	33,5
SNL 515-612	37 (30)	47	56	**22312 EK**	46	36
SNL 516-613	39 (33)	50	58	**22313 EK**	48	38
SNL 517	40 (35)	52	61	**22217 EK**	36	36
SNL 518-615	45 (35)	60	65	**22315 EK**	55	42,5
SNL 519-616	47 (40)	61	68	**22316 EK**	58	46
SNL 520-617	51 (45)	69	70	**23220 CCK/W33**	60,3	50,2
SNL 522-619	61	75	80	**23222 CCK/W33**	69,8	55,9
SNL 524-620	65	79	86	**23224 CCK/W33**	76	60
SNL 526	65	81	90	**23226 CCK/W33**	80	63
SNL 528	70	89	98	**23228 CCK/W33**	88	68
SNL 530	80	98	106	**23230 CCK/W33**	96	74
SNL 532	85	104	114	**23232 CCK/W33**	104	80

[1] The dimension b_a is determined to suit all appropriate bearings with two exceptions:
1. with self-aligning ball bearings of series 12 where the total bearing seating width must be available, the values given in brackets apply
2. for non-locating arrangements with the widest bearings, as listed above, which are not mounted centrally in the housing, the value of b_a must be either correspondingly reduced or correspondingly increased

Axial displacement using CARB bearings in SNL housings

The permissible axial displacement in a CARB bearing is dependent on the clearance remaining in the bearing after mounting: the larger the residual radial internal clearance, the larger the permissible axial displacement of one ring with respect to the other. This axial displacement reduces the clearance in the bearing until at a given displacement, the clearance disappears altogether or the rollers may start to be exposed at one side of the bearing.

Table 6 shows the maximum permissible axial displacement for each CARB bearing having Normal initial radial internal clearance when mounted normally. It is assumed that there is little difference in temperature between inner and outer ring.

When the rings are displaced a certain distance, the roller and cage assembly will move through half this distance. If the inner ring moves into the bearing, or alternatively, if the outer ring moves out from the bearing the roller and cage assembly can contact the lock nut and locking washer. For bearings of series C 22 K up to and including size 22, therefore, a special adapter sleeve with a narrow slot and a self-locking KMFE nut must be used to prevent this happening (➔ **fig** 10). Such sleeves are supplied by SKF and identified by suffix E, e.g. H 311 E.

For bearings of series C 22 K and C 32 K, from size 24 and above, the adapter sleeves are supplied together with a KML nut, indicated by suffix L in the sleeve designation, e.g. H 2324 L.

It should be observed that the possible axial displacement of the shaft relative to the housing may be limited by the type of seal used.

CARB bearing on adapter sleeve

Fig 10

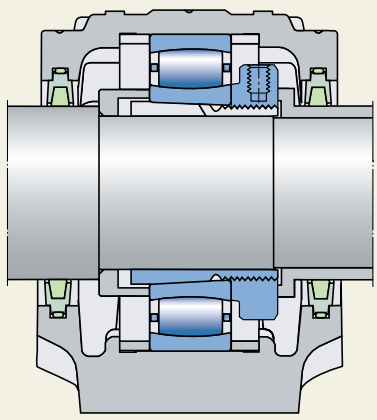

Table 6

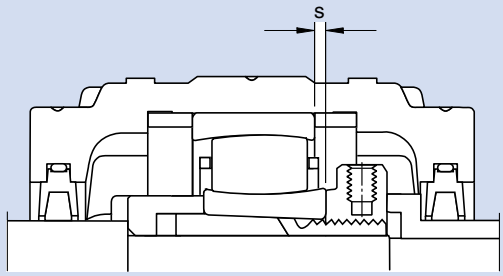

Bearing	Housing Size	Axial displacement s[1] for mounted CARB bearings with initial radial internal clearance Normal
–	–	mm
C 2205 K	**SNL 505**	2,3
C 2206 K	**SNL 506-605**	2,3
C 2207 K	**SNL 507-606**	2,8
C 2208 K	**SNL 508-607**	2,7
C 2209 K	**SNL 509**	3,1
C 2210 K	**SNL 510-608**	2,9
C 2211 K	**SNL 511-609**	3,5
C 2212 K	**SNL 512-610**	3,6
C 2213 K	**SNL 513-611**	3,7
C 2215 K	**SNL 515-612**	4,4
C 2315 K	**SNL 518-615**	5,9
C 2216 K	**SNL 516-613**	4,4
C 2316 K	**SNL 519-616**	5,7
C 2217 K	**SNL 517**	5,1
C 2317 K	**SNL 520-617**	6,5
C 2218 K	**SNL 518-615**	5,2
C 2220 K	**SNL 520-617**	5,4
C 2320 K	**SNL 524-620**	6,8
C 2222 K	**SNL 522-619**	6,7
C 3224 K	**SNL 524**	7,8
C 2226 K	**SNL 526**	8,0
C 2228 K	**SNL 528**	8,0
C 2230 K	**SNL 530**	9,3
C 3232 K	**SNL 532**	10,5

[1] s is the maximum permissible displacement of one ring with respect to the other in one direction; the total axial displacement is twice as large

Application advice for trouble-free operation

Condition monitoring is recommended for SNL plummer blocks particularly if they are used on machines where failures would cause production stoppages. The early recognition and trending of the degradation of the machine and machine parts make it possible to analyse the cause and to be able to plan for corrective maintenance actions in good time.

Extensive monitoring experience and a knowledge of the dynamic behaviour of machines, machine components and bearings where there is incipient damage allows SKF to recommend two powerful signal processing techniques which can be used for condition monitoring.

Vibration velocity

The RMS (root mean square) of the velocity of vibrations in the frequency range 10 Hz to 1 kHz has been used with great success to measure phenomena such as imbalance, misalignment, resonance etc. High levels of velocity vibration can be generated by poor machine conditions such as improper clearances, imbalance, misalignment, weak foundations, bent rotors, out-of-round, belt problems or damaged fan blades. The ISO Standard 10816-1:1995 contains recommendations for reference values for the RMS velocity values measured on different classes of machines and machine parts. These recommendations give a clear and quantifiable measure for the changes in machine condition. Vibration velocity expressed as an overall RMS value in the 10 Hz to 1 kHz frequency range provides minimal information on defects in rolling element bearings or gear mesh problems. These types of defect can now be easily detected by enveloped acceleration in the higher frequency ranges.

Enveloped acceleration

Bearing defects can be easily recognised by measurement and analysis of an enveloped acceleration signal of the higher frequencies generated by the impact signals typical of rolling bearing defects and gear teeth problems. This technique has proven to be



Electronic cabinet with built-in MCM™ units



Multilog on-line system



Microlog – portable data collector and analyser

extremely reliable in the detection of incipient bearing defects. The low frequencies generated by imbalance, misalignment etc. are not measured and diagnosed within the enveloped acceleration process.

- Condition monitoring and diagnosis with permanently installed monitoring systems

  This type of monitoring makes it possible to check the condition using MCM™ (Mechanical Condition Monitor) for a single measuring point or the multilog LMU (Local Monitoring Unit) which sequentially monitors several measuring points. The MCM™ system should be applied were an economical solution is required (e.g. for fans). The measurement output can be directly connected to a control or DCS (Digital Control System). A relay output is also available to shut down the machine or section of the plant.

- Condition monitoring and diagnosis with a portable data collector and analyser

  In this case the condition is monitored using a portable data collector/analyser at appropriate points on the machine. Where a measurement point is difficult to access, permanently installed sensors can be used. These can be connected by cable to a connection box accessible to the data collector.

Condition monitoring of SNL housings

SNL housings have appropriate points for sensors (➔ **fig** 1). Measurement points 1 and 2 are perpendicular to the shaft and correspond best to ISO 10816-1:1995. Measurement point 3 lies at approximately 45° to the shaft axis. For enveloped acceleration the angle of inclination of the measuring point is of minor importance.

Measurement points 2 and 3 should be used on SNL housings where the load acts towards the base plate. Measurement point 1 is intended for when the housing is hung from its support or when the load acts away from the base plate.

For additional information about condition monitoring and the measurement tools and systems available from SKF please contact the SKF application engineering service.

Measurement points for condition monitoring

Fig 1



Lubrication

SNL plummer block housings are so designed that the bearings in them can be lubricated with grease or oil, although grease lubrication is generally preferable. The lubricant should be selected with reference to the operating conditions. Relevant information will be found in the SKF General Catalogue and other SKF publications.

Grease lubrication

In the majority of applications, the amount of grease applied to the SNL housings when mounting (first fill) or after an inspection is adequate until the next planned inspection.

Certain operating conditions, e.g. high speeds, high temperatures or heavy loads, may mean that more frequent relubrication is necessary. **Table 1** gives guideline values for the grease quantities to be applied for the first fill and for relubrication. Seven markings will be found on the housing cap of which six show where holes can be drilled and tapped to take grease nipples.

There is also a drilled and tapped hole for the grease nipple AH 1/8-27 PTF which is supplied with the housing. This hole is closed by a plastic plug. The two markings at the outer sides of the central ridge indicate the position for lubrication holes for the seals.

It is recommended that spherical roller bearings having a lubrication groove and three holes in the outer ring (designation suffix E or W33) be lubricated via this feature (➔ **fig 2**). A hole should be drilled at one of the middle markings on the three bars for this purpose. SNL housings having a drilled and tapped hole in the middle of the cap together with a lubrication nipple can be supplied on request. They are identified by the designation suffix NM, e.g. SNL 511-609 NM.

It should be noted that when spherical roller bearings are to be relubricated via the outer ring, they should be rotated. If outer ring relubrication is not possible or if self-aligning ball bearings or CARB bearings are used the standard grease nipple supplied with the housing should be inserted in the hole provided and used for this purpose (➔ **fig 3**). If it is desired to use a grease nipple other than that supplied with the housing, adapters are available which make a reworking of the available drilled and tapped hole unnecessary.

Where V-ring seals are used, the efficacy of relubrication can be much improved if an additional V-ring is mounted inside the housing at the side

Lubricating the bearing via the outer ring

Fig 2

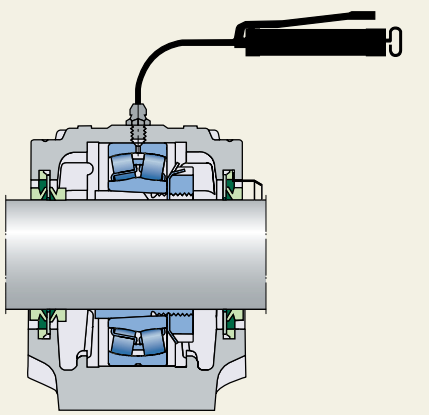

Bearing lubrication via the standard nipple

Fig 3

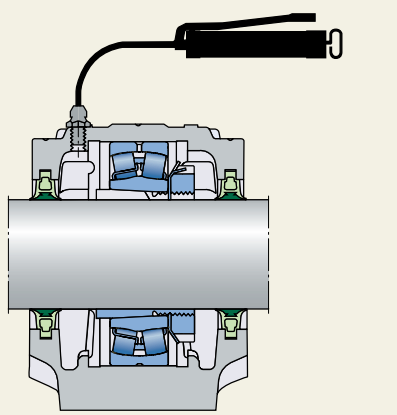

Grease quantities

Table 1

Housing Size	Grease quantities First fill[1]	Relubrication
–	g	
SNL 205	25	5
SNL 206-305	40	5
SNL 207	50	10
SNL 208-307	60	10
SNL 209	65	10
SNL 210	75	10
SNL 211	100	15
SNL 212	150	15
SNL 213	180	20
SNL 215	230	20
SNL 216	280	25
SNL 217	330	25
SNL 218	430	40
SNL 505	25	5
SNL 506-605	40	5
SNL 507-606	50	10
SNL 508-607	60	10
SNL 509	65	10
SNL 510-608	75	10
SNL 511-609	100	15
SNL 512-610	150	15
SNL 513-611	180	20
SNL 515-612	230	20
SNL 516-613	280	25
SNL 517	330	25
SNL 518-615	430	40
SNL 519-616	480	50
SNL 520-617	630	55
SNL 522-619	850	70
SNL 524-620	1 000	80
SNL 526	1 100	95
SNL 528	1 400	110
SNL 530	1 700	130
SNL 532	2 000	150

[1] Fills approximately 40 % of the free space in the housing

Recommended dimensions for grease escape hole

Table 2

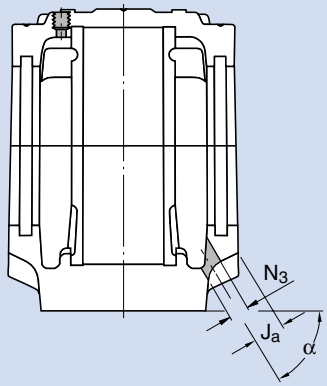

Housing Size	Dimensions J_a	N_3	α
–	mm		degrees
SNL 205	8,5	10	45
SNL 206-305	10	10	45
SNL 207	10	10	45
SNL 208-307	9	10	45
SNL 209	10	10	45
SNL 210	11	10	45
SNL 211	10	12	45
SNL 212	9	12	45
SNL 213	13	12	45
SNL 215	12,5	12	45
SNL 216	14	16	45
SNL 217	17	16	45
SNL 218	20	16	40
SNL 505	8,5	10	45
SNL 506-605	10	10	45
SNL 507-606	10	10	45
SNL 508-607	9	10	45
SNL 509	10	10	45
SNL 510-608	11	10	45
SNL 511-609	10	12	45
SNL 512-610	9	12	45
SNL 513-611	13	12	45
SNL 515-612	12,5	12	45
SNL 516-613	14	16	45
SNL 517	17	16	45
SNL 518-615	20	16	40
SNL 519-616	20	16	50
SNL 520-617	21	16	50
SNL 522-619	21	20	50
SNL 524-620	24	20	55
SNL 526	22	20	55
SNL 528	23	20	50
SNL 530	25	20	55
SNL 532	25	20	60

The dimensions are those recommended when the standard grease nipple AH 1/8-27 PTF is used (supplied with the housing) but can also be applied if nipples having threads R 1/8, KR 1/8 or M 10×1 are used. An adapter is available which fits the SNL standard lubrication hole, designation LAPN 1/8. Using this adapter nipple with thread G 1/4 and grease dispensers, e.g. SKF SYSTEM 24, can be applied.

where the grease is applied, so that grease can only exit at the opposite side of the housing. For this purpose a set comprising a V-ring and a splash plate, which covers a sector of more than 180° (➔ **fig 4**), can be supplied. This V-ring and splash plate set is designated by the prefix ASNA followed by the housing size identification and the suffix V, e.g. ASNA 511 V.

Where the bearings are mounted on adapter sleeves, the grease should be introduced at the side opposite to the lock nut of the sleeve. Where housings are mounted at shaft ends, grease should be applied at the end cover side.

Where G or C-design seals are used it should be noted that grease cannot escape via the seals. If frequent relubrication is required when such seals are used, it is advisable to provide the housing with a grease escape hole (➔ **fig 5**) through which excess grease can escape. Recommended dimensions will be found in **Table 2**. SNL housings with a grease escape hole in the base can be supplied. This housing design is identified by the suffix V, e.g. SNL 511-609 V.

If housings fitted with the G-design double-lip seals are periodically relubricated the seals can only be operated at peripheral speeds up to 4 m/s as otherwise the sealing lips may overheat and wear.

Housing with additional V-ring and splash plate

Fig 4

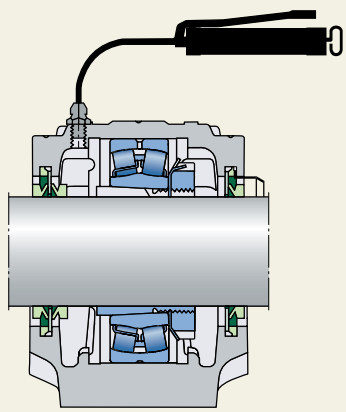

Housing with grease escape hole

Fig 5

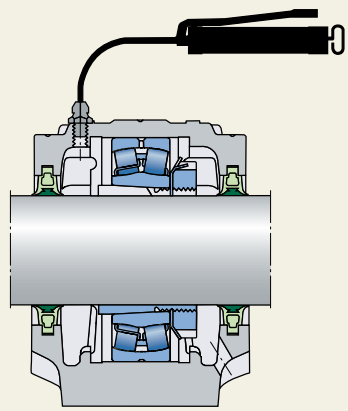

Oil lubrication

The SNL housings can be used for oil lubrication at relatively high speeds. When using oil, however, the specially developed U-design seals have to be incorporated to avoid oil loss from the housing (➔ **fig** 6). These seals are described on **page 20**. In order for these seals to be used the housing must be modified so that SNL housings for oil lubrication are only supplied complete with seals. It is important not to exceed the recommended oil level if leakage is to be avoided (➔ **Table** 3).

Fig 6

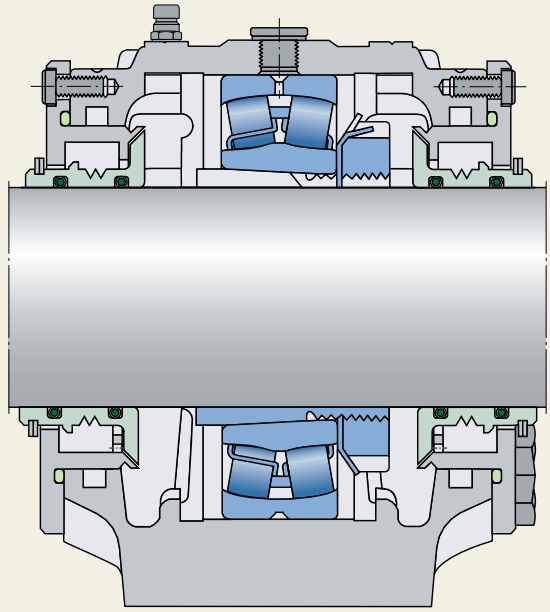

Housing for oil lubrication

Recommended oil levels for SNL .. TURU plummer blocks of series 5(00). For series 3(00) and 6(00) please contact SKF

Table 3

Housing Designation	Oil level for bearings of series 12		22		232		222		C 22	
	min	max	min	max	min	max	min	max	min	max
–	mm									
SNL 511 TURU	27	31	27	32			27	31	28	32
SNL 512 TURU	23	27	22	28			23	27	23	26
SNL 513 TURU	29	33	28	34			28	33	29	34
SNL 515 TURU	24	29	23	29			23	28	24	29
SNL 516 TURU	34	39	33	40			33	39	34	39
SNL 517 TURU	30	36	30	36			29	35	30	36
SNL 518 TURU	31	38	31	38	33	37	30	37	30	36
SNL 519 TURU	38	45	38	46			38	45		
SNL 520 TURU	34	42	34	42	37	42	33	41	35	43
SNL 522 TURU	39	47	38	48	42	47	37	46	39	48
SNL 524 TURU	47	57			50	55	46	55		
SNL 526 TURU					54	59	50	59	52	62
SNL 528 TURU					46	52	44	52	40	51
SNL 530 TURU					48	54	45	54	44	57
SNL 532 TURU					50	57	47	57		

The oil level is measured from the base of the housing. Mark the min and max level on the sight glass.

Mounting

SNL housings together with SKF bearings are robust and operationally reliable bearing arrangements which have long lives. However, if they are to achieve their full potential and not fail prematurely they must be properly mounted. Incorrect procedures or unsuitable tools can influence life negatively.

Mounting the bearing

The bearings can be mounted either on a tapered seating – normally for SNL housings in the form of an adapter sleeve – or on a cylindrical seating. When a bearing is correctly mounted on a sleeve there will be interference fits between the inner ring, sleeve and shaft. The degree of interference is determined by how far the bearing is driven up on the sleeve and either the internal clearance reduction or the axial drive-up distance can be used as a measure. The clearance reduction in spherical roller bearings can be measured using a feeler gauge, or the new SKF drive-up method can be used. Information will be sent on request.

When mounting self-aligning ball bearings having Normal radial internal clearance (which is relatively small) the clearance reduction can be checked by turning and swivelling out the outer ring. When the swivelling out meets a slight resistance, the bearing has a sufficient degree of interference and the drive-up should be stopped. A particularly simple method of mounting self-aligning ball bearings on adapter sleeves is the use of the spanner set TMHN 7 which has been specially developed for this purpose. Each spanner is marked with the angle though which the lock nut should be turned when self-aligning ball bearings having C3 radial internal clearance are used.

CARB bearings can also be mounted on cylindrical as well as tapered seatings. For tapered seatings, again normally adapter sleeves are employed; the spanner set TMHN 7 can be used for smaller CARB bearings as well as for self-aligning ball bearings. For larger CARB bearings either the clearance reduction or the axial drive-up length should be measured. When using a feeler gauge to measure clearance reduction it is important that the inner and outer rings of the bearing are not displaced with respect to each other. The new SKF drive-up method can also be applied.

Bearings with cylindrical bore are normally mounted with an interference fit on the shaft. Appropriate shaft tolerances should be selected. The recommendations applying to self-aligning ball and spherical roller bearings also apply to CARB bearings.

Details of the spanner set TMHN 7, several other mounting tools as well as the new SKF drive-up method can be found in the SKF catalogue MP200 “Tools for trouble-free operation” which will be sent on request.

Support surface for housing base

To guarantee long bearing service life it is recommended that the support surface for the housing is finished to $R_a \leqq 12{,}5$ µm. The flatness (planicity) tolerance should be to IT7. For moderate demands IT8 may be satisfactory.

Dowel pins

SNL housings are designed for loads acting vertically to the housing base support. If they are to be subjected to moderate or heavy loads acting paral-

Table 4

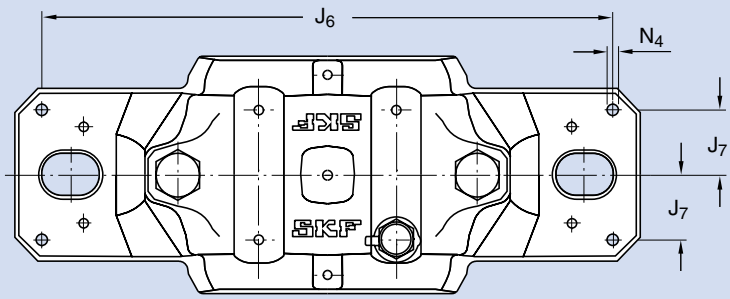

Housing Size	Dimensions J_6	J_7	N_4 max	Housing Size	Dimensions J_6	J_7	N_4 max
–	mm			–	mm		
SNL 205	152	16	5	**SNL 511-609**	234	24,5	8
SNL 206-305	172	19	5	**SNL 512-610**	234	27	8
SNL 207	172	19	5	**SNL 513-611**	252	29	8
SNL 208-307	188	22	6	**SNL 515-612**	257	29	8
SNL 209	188	22	6	**SNL 516-613**	288	33	8
SNL 210	188	22	6	**SNL 517**	292	33	8
SNL 211	234	24,5	8	**SNL 518-615**	317	35	8
SNL 212	234	27	8	**SNL 519-616**	317	35	8
SNL 213	252	29	8	**SNL 520-617**	348	39	8
SNL 215	257	29	8	**SNL 522-619**	378	44	8
SNL 216	288	33	8	**SNL 524-620**	378	44	8
SNL 217	292	33	8	**SNL 526**	414	46	12
SNL 218	317	35	8				
SNL 505	152	16	5	**SNL 528**	458	54	12
SNL 506-605	172	19	5	**SNL 530**	486	58	12
SNL 507-606	172	19	5	**SNL 532**	506	58	12
SNL 508-607	188	22	6				
SNL 509	188	22	6				
SNL 510-608	188	22	6				

Position and size of dowel pin holes

lel to the base support, a stop should be provided, or the housing should be pinned to its support. Recommendations for the position and size of holes to take dowel pins are given in **Table** 4 on **page 31**.

Housings for four-bolt mounting

For the attachment of SNL housings to T-shaped beams, it is possible to drill four bolt holes in the base. The appropriate positions are indicated by dimples. Recommended dimensions are given in **Table** 5. The housings are designated MS2 e.g SNL 510-608 MS2.

Some housings which are already prepared for four-bolt mounting having 4 cast holes in the base can be supplied. These housings are also prepared for relubrication of the bearing via the outer ring (suffix NM) as standard. Available sizes are shown in **Table** 6. The housings are designated FSNL .. NM, e.g. FSNL 511-609 NM.

Attachment bolts

It is recommended that hexagon headed bolts to strength class 8.8 according to ISO 4014:1999 should be used. If the load does not act vertically to the base, it may be necessary to use stronger, class 10.9 bolts. Details of the appropriate tightening torques for the bolts to class 8.8 are given in **Table** 2 on **page 48**.

Table 5

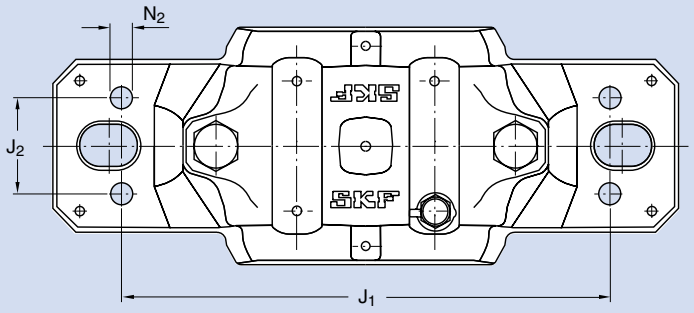

Housing Size	Dimensions J_1	J_2	N_2	Appropriate bolt size
–	mm			mm
SNL 208-307	160	34	11	M 10
SNL 209	160	34	11	M 10
SNL 210	160	34	11	M 10
SNL 211	200	40	14	M 12
SNL 212	200	40	14	M 12
SNL 213	220	48	14	M 12
SNL 215	220	48	14	M 12
SNL 216	252	52	18	M 16
SNL 217	252	52	18	M 16
SNL 218	280	58	18	M 16
SNL 508-607	160	34	11	M 10
SNL 509	160	34	11	M 10
SNL 510-608	160	34	11	M 10
SNL 511-609	200	40	14	M 12
SNL 512-610	200	40	14	M 12
SNL 513-611	220	48	14	M 12
SNL 515-612	220	48	14	M 12
SNL 516-613	252	52	18	M 16
SNL 517	252	52	18	M 16
SNL 518-615	280	58	18	M 16
SNL 519-616	280	58	18	M 16
SNL 520-617	300	66	18	M 16
SNL 522-619	320	74	18	M 16
SNL 524-620	330	74	18	M 16
SNL 526	370	80	22	M 20
SNL 528	400	92	26	M 24
SNL 530	430	100	26	M 24
SNL 532	450	100	26	M 24

Bolt hole dimensions

Table 6

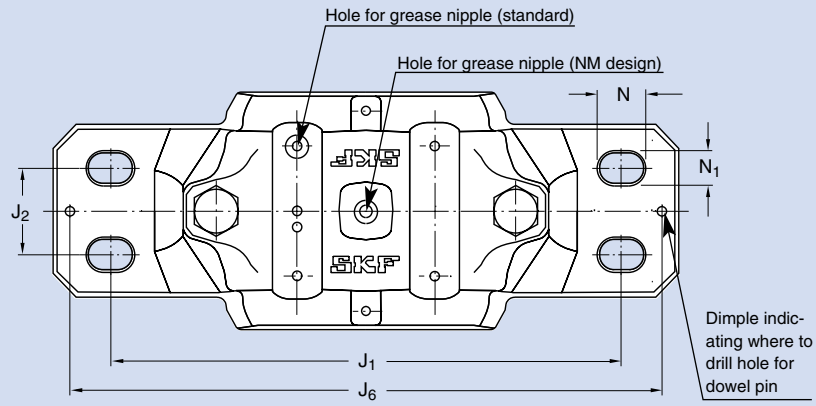

Housing Size	Dimensions N	N_1	J_1	J_2	J_6
–	mm				
FSNL 511-609 NM	20	15	210	35	234
FSNL 513-611 NM	20	15	230	40	252
FSNL 515-612 NM	20	15	230	40	257
FSNL 516-613 NM	24	18	260	50	288
FSNL 517 NM	24	18	260	50	292
FSNL 518-615 NM	24	18	290	50	317
FSNL 520-617 NM	24	18	320	60	348
FSNL 522-619 NM	24	18	350	70	378
FSNL 524-620 NM	24	18	350	70	378
FSNL 526 NM	28	22	380	70	414
FSNL 528 NM	32	26	420	80	458
FSNL 530 NM	32	26	450	90	486
FSNL 532 NM	32	26	470	90	506

Bolt hole dimensions

Mounting SNL housings with double-lip seals

Before starting installation work, the following instructions should be carefully read.

1. Ensure that the environment is clean. Check the dimensional and form accuracy of the shaft seating.

2. Check that the surface roughness of the support surface $R_a \leqq 12{,}5$ µm. The flatness (planicity) tolerance should be to IT7. For moderate demands IT8 may be satisfactory.

3. If the bearing is mounted on an adapter sleeve, determine the position of the housing. The grease nipple arranged at one side of the housing cap (for improved lubrication) should be at the side opposite to the sleeve nut. Where housings are mounted at shaft ends, grease should be applied at the end cover side. It is necessary to consider the complete housing as the base and cap will only fit together as supplied.

4. Position the housing on the support surface. Fit the attachment bolts but do not tighten them.

5. Insert one seal half in each of the grooves in the housing base. Fill the space between the two sealing lips with grease. If the housing is to be used at the end of a shaft, insert an end cover at one side instead of the seal half.

6. Mount the bearing on the shaft – either directly on a stepped shaft or using an adapter sleeve. Completely fill the bearing with grease. The remainder of the recommended grease quantity should be put in the housing base at the sides (➔ **Table** 1**, page 28**).

7. Lay the shaft with bearing in the housing base.

8. Put one locating ring (when needed) at each side of the bearing.

NB. Locating rings are only used for locating bearing arrangements, except for CARB bearings which, although always non-locating, must always be mounted with locating rings.

9. Carefully align the housing base. Vertical markings at the middle of the side faces and ends of the housing base can facilitate this. Then lightly tighten the attachment bolts.

10. The remaining seal halves should be inserted in the seal grooves in the housing cap and the space between the sealing lips filled with grease.

11. The housing cap should be placed over the base and the cap bolts (to join cap and base) tightened to the torque specified in **Table** 2 on **page 48**. The cap and base of one housing are not interchangeable with those of other housings. The cap and base should be checked to see that they bear the same identification.

12. Fully tighten the attachment bolts in the housing base. Recommended tightening torques are given in **Table** 2 on **page 48**.

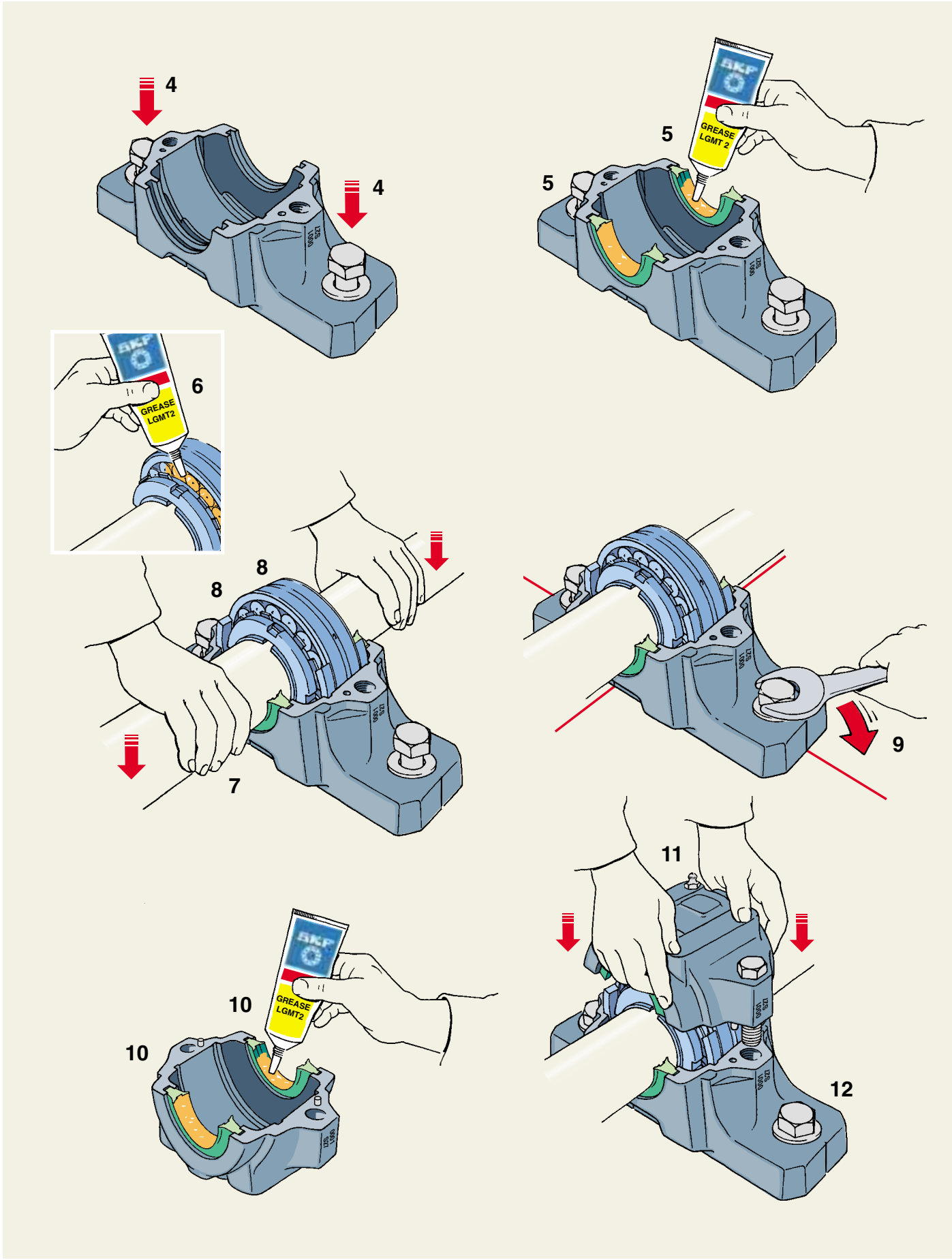
4
4
5
5
GREASE LGMT 2
6
GREASE LGMT2
8
8
7
9
10
10
GREASE LGMT2
11
12

Mounting SNL housings with V-ring seals

Before starting installation work, the following instructions should be carefully read.

1. Ensure that the environment is clean. Check the dimensional and form accuracy of the shaft seating.

2. Check that the surface roughness of the support surface $R_a \leqq 12{,}5$ µm. The flatness (planicity) tolerance should be to IT7. For moderate demands IT8 may be satisfactory.

3. If the bearing is mounted on an adapter sleeve, determine the position of the housing. The grease nipple arranged at one side of the housing cap (for improved lubrication) should be at the side opposite to the sleeve nut. Where housings are mounted at shaft ends, grease should be applied at the end cover side. It is necessary to consider the complete housing as the base and cap will only fit together as supplied.

4. Position the housing on the support surface. Fit the attachment bolts but do not tighten them.

5. Arrange the one V-ring with sealing washer on the shaft. The V-ring should be furthest away from the bearing and seal against the washer, i.e. the lip should point inwards towards the washer.

6. Mount the bearing on the shaft – either directly on a stepped shaft or using an adapter sleeve. Completely fill the bearing with grease. The remainder of the recommended grease quantity should be put in the housing base at the sides (➔ **Table** 1**, page 28**).

7. Arrange the second sealing washer and V-ring on the shaft at the other side of the bearing. If the housing is to be used at the end of a shaft, mount an end cover instead.

8. Lay the shaft with bearing and sealing washers in the housing base.

9. Put one locating ring (when needed) at each side of the bearing.

NB. Locating rings are only used for locating bearing arrangements, except for CARB bearings which, although always non-locating, must always be mounted with locating rings.

10. Carefully align the housing base. Vertical markings at the middle of the side faces and ends of the housing base can facilitate this. Then lightly tighten the attachment bolts.

11. The housing cap should be placed over the base and the cap bolts (to join cap and base) tightened to the torque specified in **Table** 2 on **page 48**. The cap and base of one housing are not interchangeable with those of other housings. The cap and base should be checked to see that they bear the same identification.

12. Fully tighten the attachment bolts in the housing base. Recommended tightening torques are given in **Table** 2 on **page 48**.

13. Coat the V-ring counterfaces on the sealing washers with grease.

14. Finally, push the V-ring seals into their correct position. This can be done using a screwdriver at the same time as the shaft is turned.

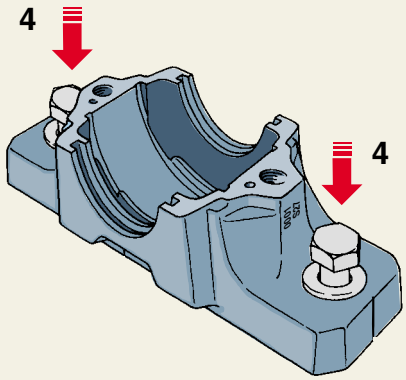
4
4

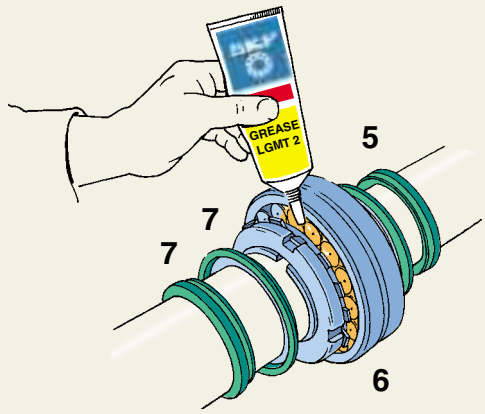
GREASE
LGMT 2
5
7
7
6

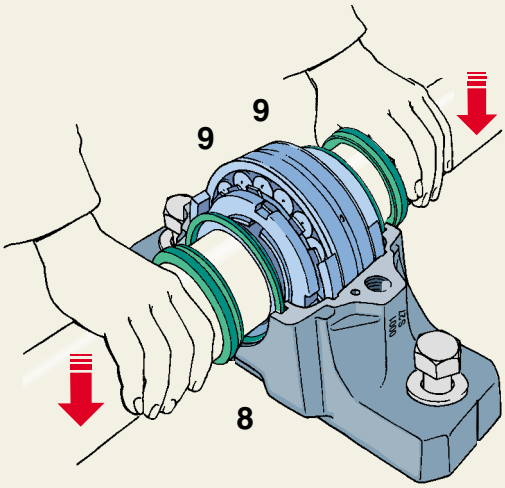
9
9
8

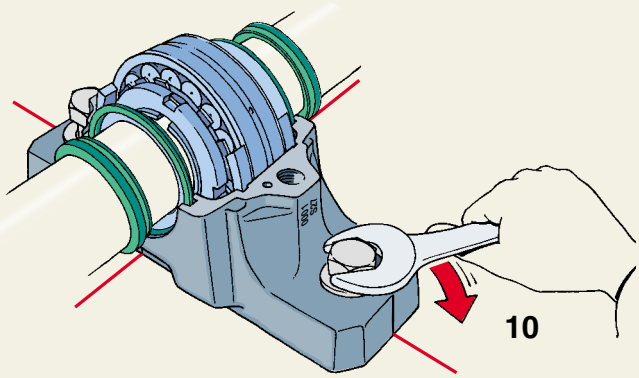
10

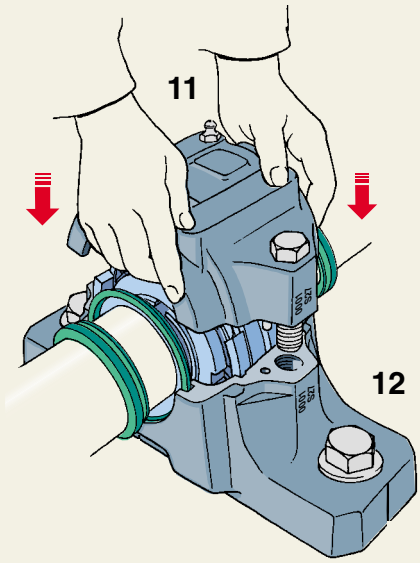
11
12

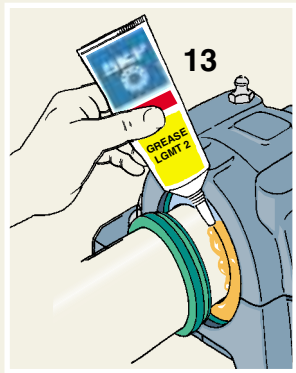
13
GREASE
LGMT 2

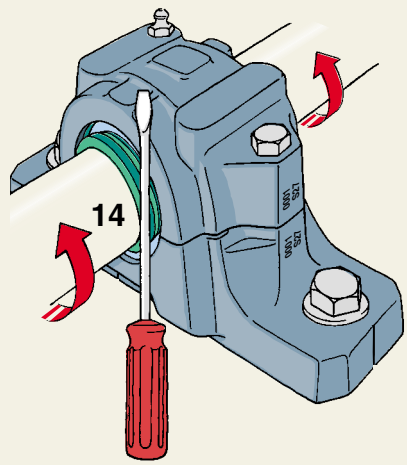
14

Mounting SNL housings with felt seals

Before starting installation work, the following instructions should be carefully read.

1. Ensure that the environment is clean. Check the dimensional and form accuracy of the shaft seating.

2. Check that the surface roughness of the support surface $R_a \leqq 12{,}5$ µm. The flatness (planicity) tolerance should be to IT7. For moderate demands IT8 may be satisfactory.

3. If the bearing is mounted on an adapter sleeve, determine the position of the housing. The grease nipple arranged at one side of the housing cap (for improved lubrication) should be at the side opposite to the sleeve nut. Where housings are mounted at shaft ends, grease should be applied at the end cover side. It is necessary to consider the complete housing as the base and cap will only fit together as supplied.

4. Position the housing on the support surface. Fit the attachment bolts but do not tighten them.

5. Insert the rubber O-section cords in the grooves in the housing base. If the housing is to be used at the end of a shaft, insert an end cover at one side instead of one O-section cord.

6. Place one felt ring seal half (in light alloy ring) over the O-section cord in each sealing groove in the housing base. (Details regarding mounting of loose FS felt strips ➔ **page 18**). If the housing is to be used at a shaft end, the second felt ring seal half is omitted and an end cover inserted in the housing base instead.

7. Mount the bearing on the shaft – either directly on a stepped shaft or using an adapter sleeve. Completely fill the bearing with grease. The remainder of the recommended grease quantity should be put in the housing base at the sides (➔ **Table 1, page 28**).

8. Lay the shaft with bearing in the housing base.

9. Put one locating ring (when needed) at each side of the bearing.

NB. Locating rings are only used for locating bearing arrangements, except for CARB bearings which, although always non-locating, must always be mounted with locating rings.

10. Carefully align the housing base. Vertical markings at the middle of the side faces and ends of the housing base can facilitate this. Then lightly tighten the attachment bolts.

11. Put the O-ring cord into the sealing grooves in the housing cap.

12. The remaining seal halves should be inserted in the seal grooves in the housing cap over the O-ring cords.

13. The housing cap should be placed over the base and the cap bolts (to join cap and base) tightened to the torque specified in **Table 2** on **page 48**. The cap and base of one housing are not interchangeable with those of other housings. The cap and base should be checked to see that they bear the same identification.

14. Fully tighten the attachment bolts in the housing base. Recommended tightening torques are given in **Table 2** on **page 48**.

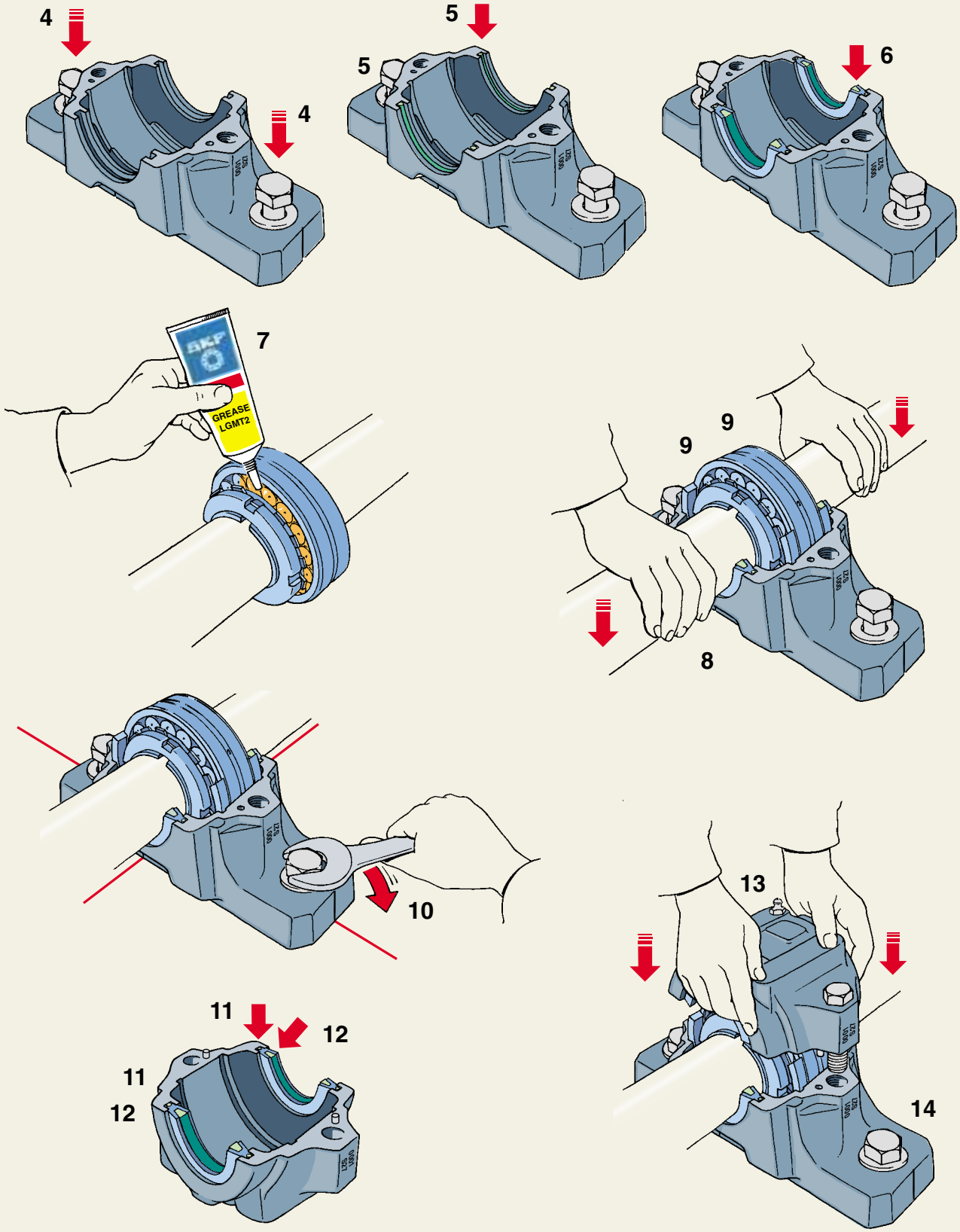
4
4
5
5
6
7
SKF
GREASE
LGMT2
9
9
8
10
11
12
11
12
13
14

Mounting SNL housings with labyrinth seals

Before starting installation work, the following instructions should be carefully read.

1. Ensure that the environment is clean. Check the dimensional and form accuracy of the shaft seating.

2. Check that the surface roughness of the support surface $R_a \leqq 12{,}5$ µm. The flatness (planicity) tolerance should be to IT7. For moderate demands IT8 may be satisfactory.

3. If the bearing is mounted on an adapter sleeve, determine the position of the housing. The grease nipple arranged at one side of the housing cap (for improved lubrication) should be at the side opposite to the sleeve nut. Where housings are mounted at shaft ends, grease should be applied at the end cover side. It is necessary to consider the complete housing as the base and cap will only fit together as supplied.

4. Position the housing on the support surface. Fit the attachment bolts but do not tighten them.

5. Mount the first labyrinth seal on the shaft in the correct position.

6. Mount the bearing on the shaft – either directly on a stepped shaft or using an adapter sleeve. Completely fill the bearing with grease. The remainder of the recommended grease quantity should be put in the housing base at the sides (➔ **Table 1, page 28**).

7. Mount the second labyrinth ring on the shaft in the correct position. If the housing is to be used at a shaft end, the second labyrinth ring is omitted and an end cover inserted in the housing base instead.

8. Lay the shaft with bearing and labyrinth ring(s) in the housing base.

9. Put one locating ring (when needed) at each side of the bearing.

NB. Locating rings are only used for locating bearing arrangements, except for CARB bearings which, although always non-locating, must always be mounted with locating rings.

10. Carefully align the housing base. Vertical markings at the middle of the side faces and ends of the housing base can facilitate this. Then lightly tighten the attachment bolts.

11. The housing cap should be placed over the base and the cap bolts (to join cap and base) tightened to the torque specified in **Table 2** on **page 48**. The cap and base of one housing are not interchangeable with those of other housings. The cap and base should be checked to see that they bear the same identification.

12. Fully tighten the attachment bolts in the housing base. Recommended tightening torques are given in **Table 2** on **page 48**.

13. Finally insert the hollow O-ring cord of synthetic rubber in the grooves in the labyrinth rings. This can be done using a screwdriver while turning the shaft.

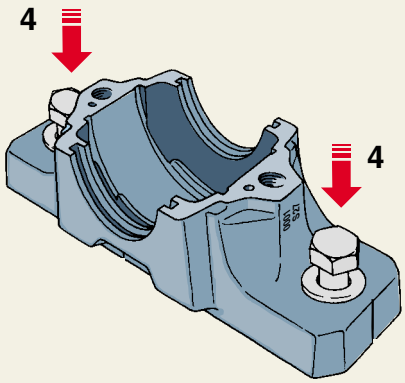
4
4

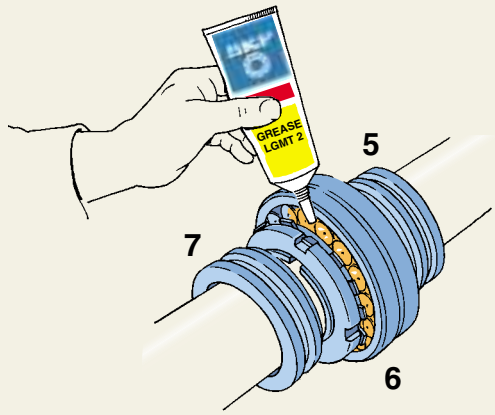
GREASE
LGMT 2
5
7
6

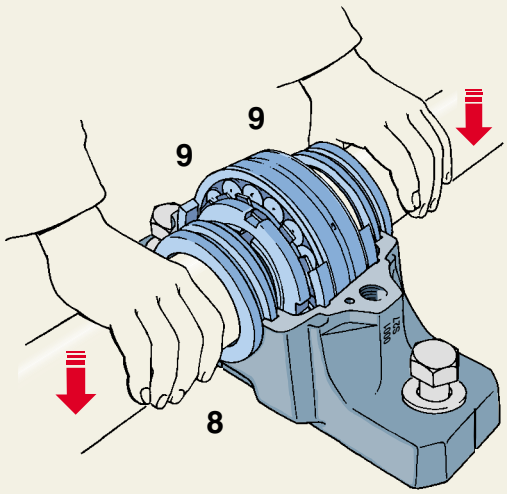
9
9
8

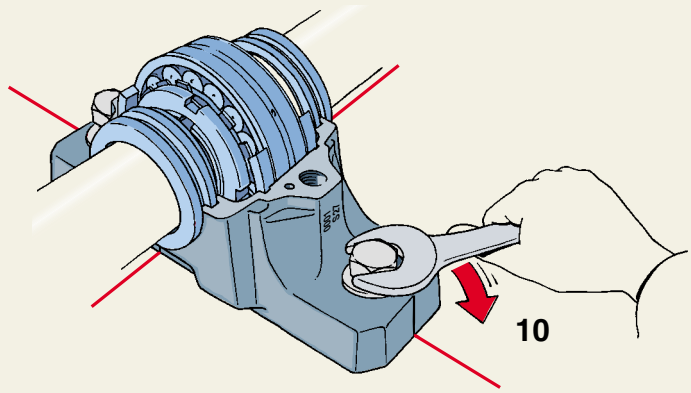
10

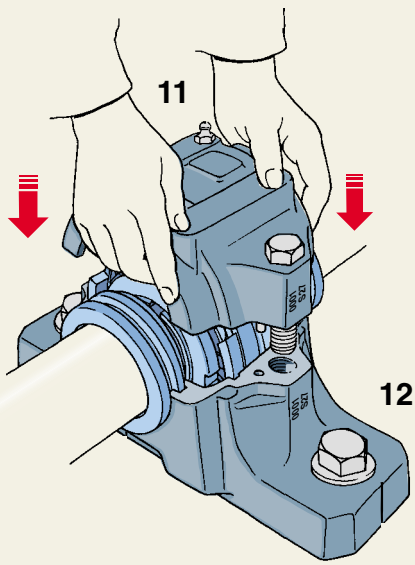
11
12

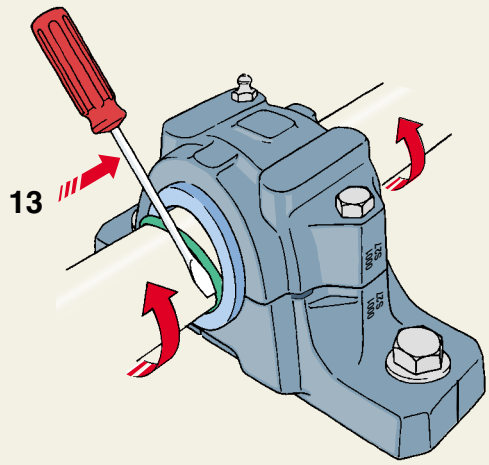
13

Mounting SNL housings with taconite seals

Before starting installation work, the following instructions should be carefully read.

1. Ensure that the environment is clean. Check the dimensional and form accuracy of the shaft seating.

2. Check that the surface roughness of the support surface $R_a \leqq 12{,}5$ µm. The flatness (planicity) tolerance should be to IT7. For moderate demands IT8 may be satisfactory.

3. If the bearing is mounted on an adapter sleeve, determine the position of the housing. The grease nipple arranged at one side of the housing cap (for improved lubrication) should be at the side opposite to the sleeve nut. Where housings are mounted at shaft ends, grease should be applied at the end cover side. It is necessary to consider the complete housing as the base and cap will only fit together as supplied.

4. Position the housing on the support surface. Fit the attachment bolts but do not tighten them.

5. Mount the first V-ring together with one labyrinth seal on the shaft in the correct position. The lip of the V-ring should point towards the bearing. Place the split ring over the V-ring and labyrinth ring and screw together. The two parts of this split ring are not interchangeable. They should be checked to see that they carry the same identification.

6. Mount the bearing on the shaft – either directly on a stepped shaft or using an adapter sleeve. Completely fill the bearing with grease. The remainder of the recommended grease quantity should be put in the housing base at the sides (➔ **Table** 1**, page 28**).

7. Mount the second seal according to point 5. If the housing is to be used at a shaft end, the second seal is omitted and an end cover inserted in the housing base instead.

8. Use the hollow O-section cord to fix the labyrinth ring in position on the shaft. A screwdriver can be used to fit the cords whilst rotating the shaft. Mount the O-ring on the seal outer diameter.

9. Lay the shaft with bearing and seals in the housing base taking care that the O-rings are not damaged.

10. Put one locating ring (when needed) at each side of the bearing.

NB. Locating rings are only used for locating bearing arrangements, except for CARB bearings which, although always non-locating, must always be mounted with locating rings.

11. Carefully align the housing base. Vertical markings at the middle of the side faces and ends of the housing base can facilitate this. Then lightly tighten the attachment bolts.

12. The housing cap should be placed over the base and the cap bolts (to join cap and base) tightened to the torque specified in **Table** 2 on **page 48**. The cap and base of one housing are not interchangeable with those of other housings. The cap and base should be checked to see that they bear the same identification.

13. Fully tighten the attachment bolts in the housing base. Recommended tightening torques are given in **Table** 2 on **page 48**.

14. Finally, before the first test run, rotate the shaft and supply grease via the nipple until it exudes from the labyrinth rings. The same grease as that used for the bearing should also be used to lubricate the labyrinth rings.

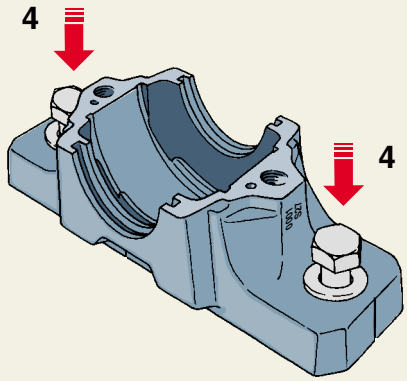
4
4

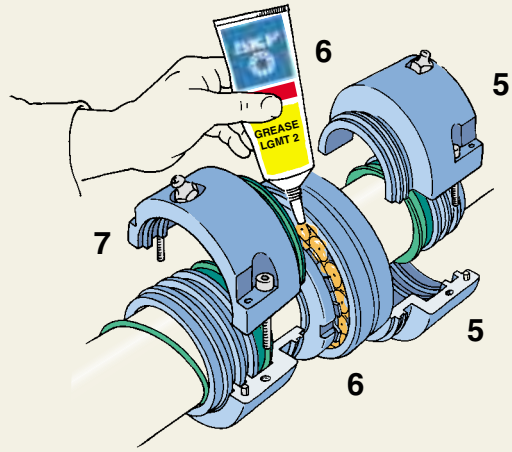
6
5
GREASE
LGMT 2
7
5
6

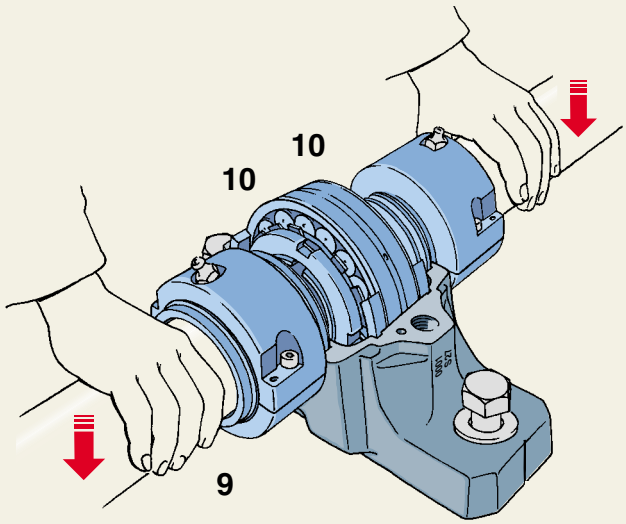
10
10
9

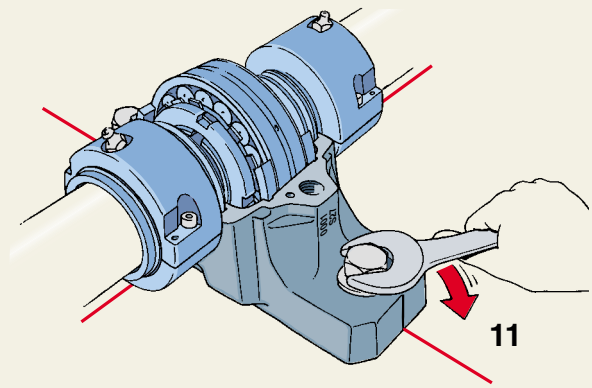
11

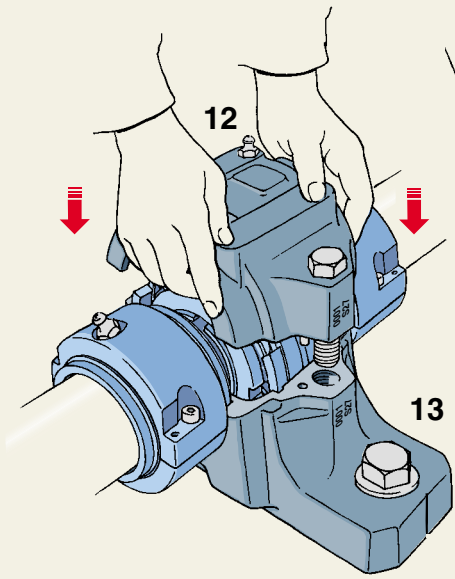
12
13

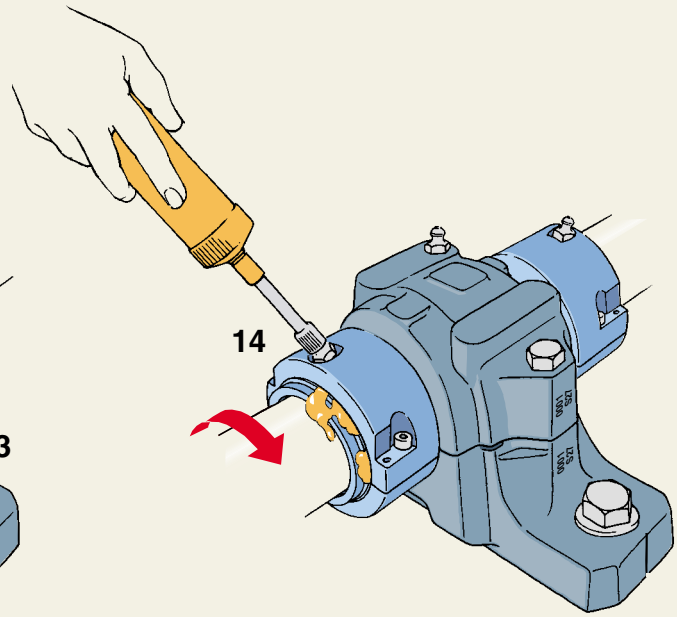
14

Mounting SNL housings with oil seals

Before starting installation work, the following instructions should be carefully read.

1. Ensure that the environment is clean. Check the dimensional and form accuracy of the shaft seating.

2. Check that the surface roughness of the support surface $R_a \leqq 12{,}5$ µm. The flatness (planicity) tolerance should be to IT7.

3. If the bearing is mounted on an adapter sleeve, determine the position of the housing.

4. Position the housing on the support surface. Fit the attachment bolts but do not tighten them.

5. Assemble the seals. Check if the O-ring and silicon tubes are at their right positions in respective groove (➔ **fig** 7 on **page 20**).

6. Cover the shaft with a thin layer of oil. Slide the first seal to its right mounting position, some millimetres outside its working position.

7. Mount the bearing on the shaft – either directly on a stepped shaft or using an adapter sleeve.

8. Slide the second seal to the right position on the shaft, as described in point 6. If the housing is to be used at a shaft end, the second seal is omitted and the inner part of the end cover is inserted in the housing base seal groove.

9. Lay the shaft with bearing and seal assemblies in the housing base.

10. Put one locating ring (when needed) at each side of the bearing.

NB. Locating rings are only used for locating bearing arrangements, except for CARB bearings which, although always non-locating, must always be mounted with locating rings.

11. Carefully align the housing base. Vertical markings at the middle of the side faces and ends of the housing base can facilitate this. Then lightly tighten the attachment bolts.

12. Cover the mating surfaces of the housing with oil-resistant sealant Loctite 573 or equal. The housing cap should be placed over the base and the cap bolts (to join cap and base) tightened to the torque specified in **Table** 2 on **page 48**. The cap and base of one housing are not interchangeable with those of other housings. The cap and base should be checked to see that they bear the same identification.

13. Fully tighten the attachment bolts in the housing base. Recommended tightening torques are given in **Table** 2 on **page 48**.

14. Slide the seals against the housing side surfaces. Mount the seal-mounting screws and tighten them. If an end cover has been mounted fully tighten the screw on the external part of the end cover.

15. Mount the supplied ventilating plug on the top of the housing and when oil bath shall be used, mount the oil level sight glass. When circulating oil lubrication shall be used connect the oil inlet and outlet pipes to the housing.

16. When oil bath is used, the max and min oil level should be indicated on the sight glass. Recommended oil level to be used for the mounted bearing can be found in **Table** 3 on **page 30**.

NB. For oil bath it is important not to overfill the max level as this can cause oil leakage from the housing. For circulating oil is it important that the outlet pipe/pipes can drain the housing in a proper way to avoid overfill of oil inside the housing.

17. Protect the housing assembly from negative pressure from surrounding equipment.

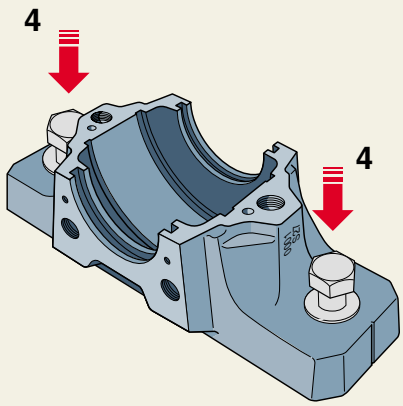
4
4

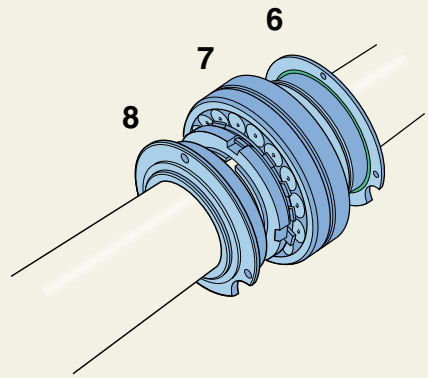
6
7
8

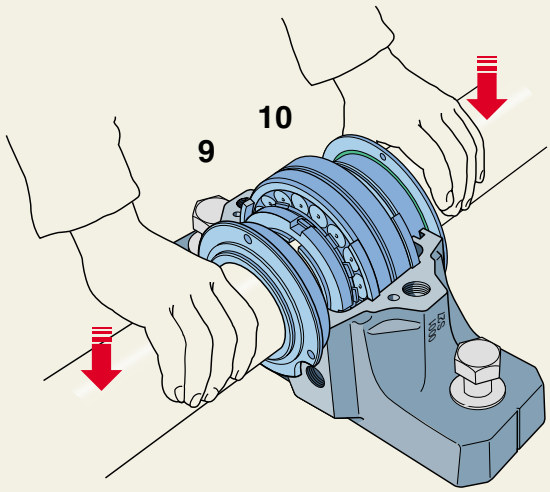
10
9

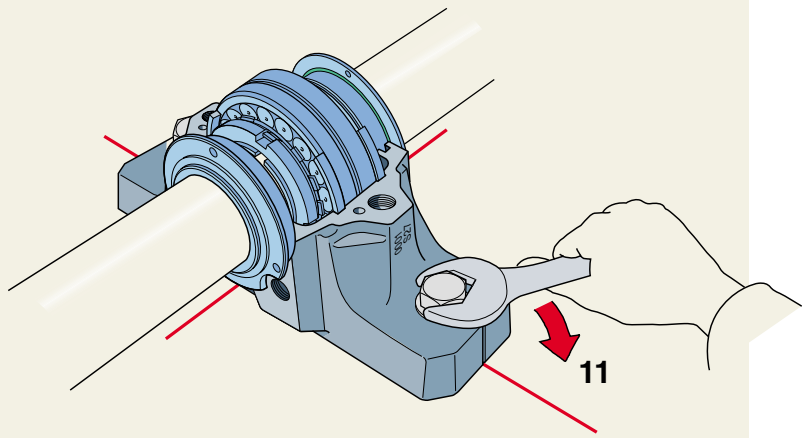
11

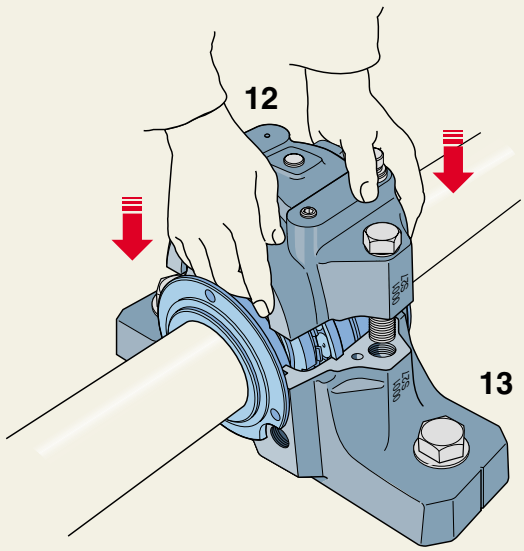
12
13

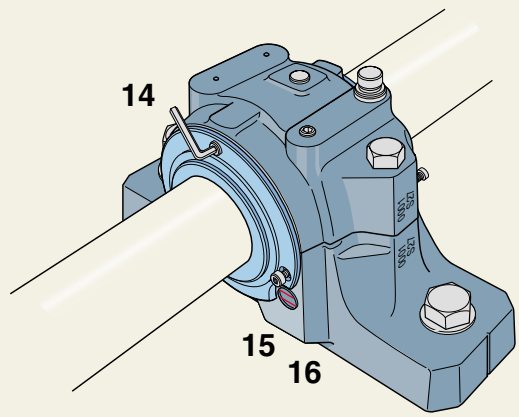
14
15
16

Designations and housing data

Designations

The designations used for SNL housings consist of a basic designation which identifies the design, material and size followed by any supplementary designations needed to identify features which differ from the standard design. A dash (–) in the chart indicates that the features belong to the standard design.

Designation chart

F SNL 522-619 NMSN

Variants

– Two holes for attachment bolts
F Four cast holes for attachment bolts
S No holes

Basic design

– Housing of grey cast iron

Size

205 to **218**
505 to **532**

Suffixes

NM Drilled and tapped hole 1/8-27 NPSF positioned at the centre of the cap for bearings with annular groove and three lubrication holes in the outer ring. Grease nipple AH 1/8-27 PTF is supplied with the housing
MS2 Four drilled holes for attachment bolts
V Housing with grease escape hole in base
T Drilled and tapped hole 1/4-28 UNF at one side of the cap to take grease nipple AH 1/4-28 SAE-LT for relubrication of seal; nipple supplied with housing.
TD Drilled and tapped hole 1/4-28 UNF at both sides of cap to take grease nipple AH 1/4-28 SAE-LT for lubrication of seals, two nipples supplied with housing.
SN Housing with drilled and tapped hole for sensor position 3 (see Fig 1 on page 27)
K7 Housing with bearing seating diameter tolerance K7

Where two or more suffixes are used they are given in the same order as above.

Load carrying ability

SNL plummer block housings are intended for loads acting vertically towards the base plate (support). If loads acting in other directions occur, checks should be made to ensure that the magnitude of the load is permissible for the housing, the bolts joining the housing cap and base, and for the attachment bolts.

Load carrying ability of the housing
Guideline values for the breaking load P of the housing for various load directions are given in **Table** 1. Using these values and a safety factor selected with respect to the operating conditions, the permissible load for the housing can be calculated. In general engineering a safety factor of 6 is often used. For special purposes where extra strength and resistance to shock loads are required, SKF supplies as standard a range of dimensionally equivalent spheroidal graphite cast iron housings. For housings made of spheroidal graphite cast iron the values for P obtained from **Table** 1 should be multiplied by 1,8.

It is important for the load carrying ability of the housing that the bolts joining cap and base are properly tightened in accordance with the values given in **Table** 2 on **page 48**. The axial load carry-ing capacity of the housing is approx-imately 65 % of $P_{180°}$. For load angles between 55 and 120° as well as for axial loads, or if the load acting parallel to the base plate (support surface) exceeds 5 % of $P_{180°}$, the housing should be pinned to the support or a stop should be provided in the direction of the load.

Table 1

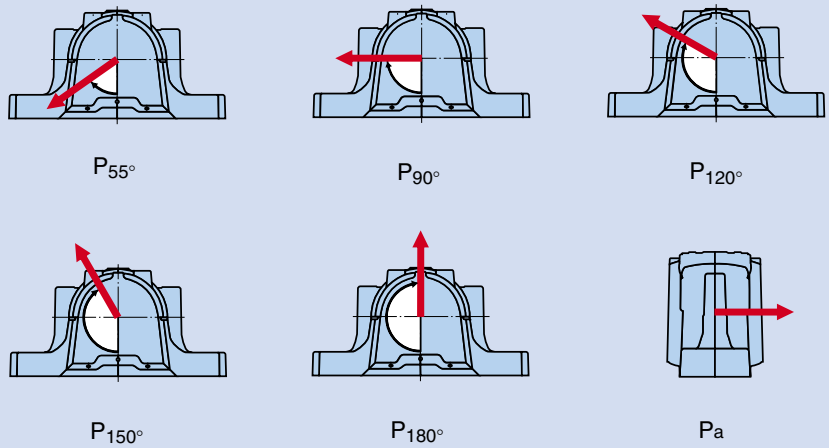

Housing Size	Breaking loads for SNL housing $P_{55°}$	$P_{90°}$	$P_{120°}$	$P_{150°}$	$P_{180°}$	P_a
–	kN					
SNL 205	155	95	70	60	80	52
SNL 206-305	170	100	80	65	85	55
SNL 207	190	115	85	80	95	60
SNL 208-307	215	130	95	85	110	70
SNL 209	230	140	100	90	115	75
SNL 210	265	155	120	110	130	85
SNL 211	275	170	125	115	140	90
SNL 212	300	180	130	120	150	100
SNL 213	340	205	150	130	170	110
SNL 215	410	250	185	160	205	135
SNL 216	430	260	190	175	215	140
SNL 217	480	290	205	190	240	155
SNL 218	550	340	250	215	275	180
SNL 505	155	95	70	60	80	52
SNL 506-605	170	100	80	65	85	55
SNL 507-606	190	115	85	80	95	60
SNL 508-607	215	130	95	85	110	70
SNL 509	230	140	100	90	115	75
SNL 510-608	265	155	120	110	130	85
SNL 511-609	275	170	125	115	140	90
SNL 512-610	300	180	130	120	150	100
SNL 513-611	340	205	150	130	170	110
SNL 515-612	410	250	185	160	205	135
SNL 516-613	430	260	190	175	215	140
SNL 517	480	290	205	190	240	155
SNL 518-615	550	340	250	215	275	180
SNL 519-616	580	350	260	230	290	190
SNL 520-617	620	370	280	250	310	200
SNL 522-619	680	410	310	275	340	220
SNL 524-620	790	470	350	320	400	260
SNL 526	900	540	410	360	450	295
SNL 528	1 050	630	470	430	530	345
SNL 530	1 200	730	540	480	600	390
SNL 532	1 450	860	640	570	720	470

Breaking loads for SNL plummer block housings

Table 2

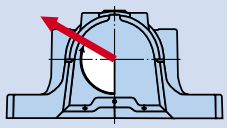

$Q_{120°}$
$F_{120°}$

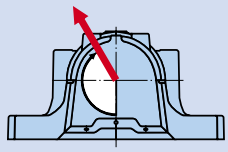

$Q_{150°}$
$F_{150°}$

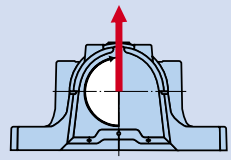

$Q_{180°}$
$F_{180°}$

Housing Size	Cap bolts Yield point for both bolts $Q_{120°}$	$Q_{150°}$	$Q_{180°}$	Maximum load for both bolts $F_{120°}$	$F_{150°}$	$F_{180°}$	Tightening torque	Designation	Attachment bolts Size	Tightening torque
–	kN			kN			Nm	–	–	Nm
SNL 205	150	85	75	50	30	25	50	M 10×40	M 12	90
SNL 206-305	150	85	75	50	30	25	50	M 10×40	M 12	90
SNL 207	150	85	75	50	30	25	50	M 10×50	M 12	90
SNL 208-307	150	85	75	50	30	25	50	M 10×50	M 12	90
SNL 209	150	85	75	50	30	25	50	M 10×50	M 12	90
SNL 210	150	85	75	50	30	25	50	M 10×55	M 12	90
SNL 211	220	125	110	80	45	40	80	M 12×60	M 16	220
SNL 212	220	125	110	80	45	40	80	M 12×60	M 16	220
SNL 213	220	125	110	80	45	40	80	M 12×65	M 16	220
SNL 215	220	125	110	80	45	40	80	M 12×65	M 16	220
SNL 216	220	125	110	80	45	40	80	M 12×70	M 20	430
SNL 217	220	125	110	80	45	40	80	M 12×80	M 20	430
SNL 218	400	230	200	170	100	85	150	M 16×90	M 20	430
SNL 505	150	85	75	50	30	25	50	M 10×40	M 12	90
SNL 506-605	150	85	75	50	30	25	50	M 10×40	M 12	90
SNL 507-606	150	85	75	50	30	25	50	M 10×50	M 12	90
SNL 508-607	150	85	75	50	30	25	50	M 10×50	M 12	90
SNL 509	150	85	75	50	30	25	50	M 10×50	M 12	90
SNL 510-608	150	85	75	50	30	25	50	M 10×55	M 12	90
SNL 511-609	220	125	110	80	45	40	80	M 12×60	M 16	220
SNL 512-610	220	125	110	80	45	40	80	M 12×60	M 16	220
SNL 513-611	220	125	110	80	45	40	80	M 12×65	M 16	220
SNL 515-612	220	125	110	80	45	40	80	M 12×65	M 16	220
SNL 516-613	220	125	110	80	45	40	80	M 12×70	M 20	430
SNL 517	220	125	110	80	45	40	80	M 12×80	M 20	430
SNL 518-615	400	230	200	170	100	85	150	M 16×90	M 20	430
SNL 519-616	400	230	200	170	100	85	150	M 16×90	M 20	430
SNL 520-617	620	360	310	260	150	130	200	M 20×100	M 24	750
SNL 522-619	620	360	310	260	150	130	200	M 20×100	M 24	750
SNL 524-620	620	360	310	260	150	130	200	M 20×110	M 24	750
SNL 526	900	500	450	380	220	190	350	M 24×130	M 24	750
SNL 528	900	500	450	380	220	190	350	M 24×130	M 30	1 400
SNL 530	900	500	450	380	220	190	350	M 24×130	M 30	1 400
SNL 532	900	500	450	380	220	190	350	M 24×130	M 30	1 400

Load carrying ability of bolts
SNL plummer block housings are supplied with cap bolts (to join cap and base) to strength class 8.8 as standard. The guideline values for the yield point Q for the cap bolts are given in **Table** 2 for various load directions as well as the corresponding maximum radial loads F.

Load carrying ability and tightening torques for cap bolts and attachment bolts

Page 3

Page 10

SNL plummer block housings for bearings on adapter sleeves
d_a **20 – 35** mm

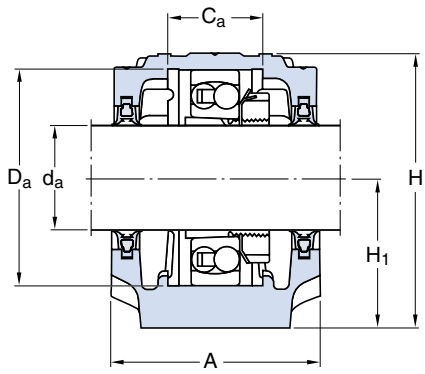

Double-lip seals
G design

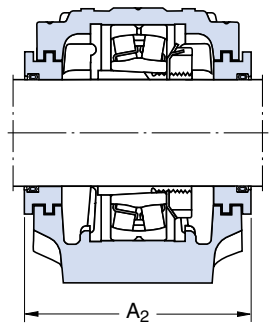

Labyrinth seals
S design

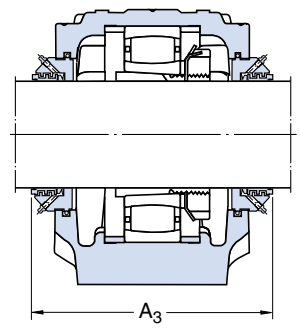

Taconite seals
ND design

Shaft	Housing Dimensions										Mass	Designations			
												Housing complete with two seals	Components Housing only	Seals	End cover
d_a	A	A_1	H	H_1	H_2	J	L	N	N_1	G					
mm	mm										kg	–			
20	67	46	74	40	19	130	165	20	15	12	1,45	**SNL 505 TG**	SNL 505	TSN 505 G	ASNH 505
												SNL 505 TA	SNL 505	TSN 505 A	ASNH 505
												SNL 505 TC	SNL 505	TSN 505 C	ASNH 505
												SNL 505 TS	SNL 505	TSN 505 S	ASNH 505
												SNL 505 TND	SNL 505	TSN 505 ND	ASNH 505
	77	52	89	50	22	150	185	20	15	12	2,00	**SNL 605 TG**	SNL 506-605	TSN 605 G	ASNH 506-605
												SNL 605 TA	SNL 506-605	TSN 605 A	ASNH 506-605
												SNL 605 TC	SNL 506-605	TSN 605 C	ASNH 506-605
												SNL 605 TS	SNL 506-605	TSN 605 S	ASNH 506-605
												SNL 605 TND	SNL 506-605	TSN 605 ND	ASNH 506-605
25	77	52	89	50	22	150	185	20	15	12	2,00	**SNL 506 TG**	SNL 506-605	TSN 506 G	ASNH 506-605
												SNL 506 TA	SNL 506-605	TSN 506 A	ASNH 506-605
												SNL 506 TC	SNL 506-605	TSN 506 C	ASNH 506-605
												SNL 506 TS	SNL 506-605	TSN 506 S	ASNH 506-605
												SNL 506 TND	SNL 506-605	TSN 506 ND	ASNH 506-605
	82	52	93	50	22	150	185	20	15	12	2,20	**SNL 606 TG**	SNL 507-606	TSN 606 G	ASNH 507-606
												SNL 606 TA	SNL 507-606	TSN 606 A	ASNH 507-606
												SNL 606 TC	SNL 507-606	TSN 606 C	ASNH 507-606
												SNL 606 TS	SNL 507-606	TSN 606 S	ASNH 507-606
												SNL 606 TND	SNL 507-606	TSN 606 ND	ASNH 507-606
30	82	52	93	50	22	150	185	20	15	12	2,20	**SNL 507 TG**	SNL 507-606	TSN 507 G	ASNH 507-606
												SNL 507 TA	SNL 507-606	TSN 507 A	ASNH 507-606
												SNL 507 TC	SNL 507-606	TSN 507 C	ASNH 507-606
												SNL 507 TS	SNL 507-606	TSN 507 S	ASNH 507-606
												SNL 507 TND	SNL 507-606	TSN 507 ND	ASNH 507-606
	85	60	107	60	25	170	205	20	15	12	2,90	**SNL 607 TG**	SNL 508-607	TSN 607 G	ASNH 508-607
												SNL 607 TA	SNL 508-607	TSN 607 A	ASNH 508-607
												SNL 607 TC	SNL 508-607	TSN 607 C	ASNH 508-607
												SNL 607 TS	SNL 508-607	TSN 607 S	ASNH 508-607
												SNL 607 TND	SNL 508-607	TSN 607 ND	ASNH 508-607
35	85	60	108	60	25	170	205	20	15	12	2,90	**SNL 508 TG**	SNL 508-607	TSN 508 G	ASNH 508-607
												SNL 508 TA	SNL 508-607	TSN 508 A	ASNH 508-607
												SNL 508 TC	SNL 508-607	TSN 508 C	ASNH 508-607
												SNL 508 TS	SNL 508-607	TSN 508 S	ASNH 508-607
												SNL 508 TND	SNL 508-607	TSN 508 ND	ASNH 508-607
	90	60	113	60	25	170	205	20	15	12	3,20	**SNL 608 TG**	SNL 510-608	TSN 608 G	ASNH 510-608
												SNL 608 TA	SNL 510-608	TSN 608 A	ASNH 510-608
												SNL 608 TC	SNL 510-608	TSN 608 C	ASNH 510-608
												SNL 608 TS	SNL 510-608	TSN 608 S	ASNH 510-608
												SNL 608 TND	SNL 510-608	TSN 608 ND	ASNH 510-608

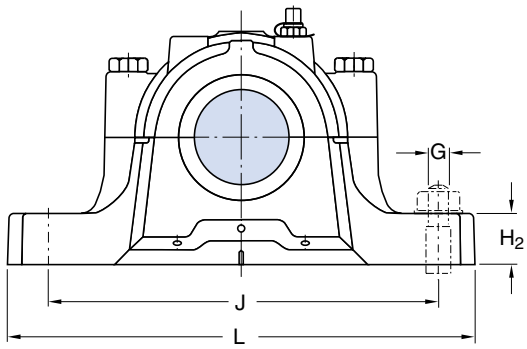

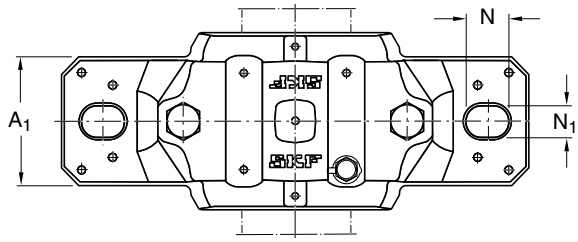

Shaft	Bearing seating		Width across seal		Appropriate bearings and associated components					
					Self-aligning ball bearing Spherical roller bearing	Adapter sleeve	Locating rings 2 per housing	Self-aligning ball bearing Spherical roller bearing CARB bearing	Adapter sleeve	Locating rings 2 per housing
d_a	C_a	D_a	A_2	A_3						
mm	mm		mm		–					
20	25	52	80	125	**1205 EK** **–**	H 205 –	FRB 5/52 –	**2205 EK** **22205 CCK/W33** **C 2205 K**	H 305 H 305 H 305 E	FRB 3.5/52 FRB 3.5/52 FRB 3.5/52
	32	62	89	135	**1305 EK** **–**	H 305 –	FRB 7.5/62 –	**2305 EK** **–** **–**	H 2305 – –	FRB 4/62 – –
25	32	62	89	135	**1206 EK** **–**	H 206 –	FRB 8/62 –	**2206 EK** **22206 CCK/W33** **C 2206 K**	H 306 H 306 H 306 E	FRB 6/62 FRB 6/62 FRB 6/62
	34	72	94	140	**1306 EK** **–**	H 306 –	FRB 7.5/72 –	**2306 K** **–** **–**	H 2306 – –	FRB 3.5/72 – –
30	34	72	94	145	**1207 EK** **–**	H 207 –	FRB 8.5/72 –	**2207 EK** **22207 CCK/W33** **C 2207 K**	H 307 H 307 H 307 E	FRB 5.5/72 FRB 5.5/72 FRB 5.5/72
	39	80	97	145	**1307 EK** **–**	H 307 –	FRB 9/80 –	**2307 EK** **–** **–**	H 2307 – –	FRB 4/80 – –
35	39	80	97	150	**1208 EK** **–**	H 208 –	FRB 10.5/80 –	**2208 EK** **22208 EK** **C 2208 K**	H 308 H 308 H 308 E	FRB 8/80 FRB 8/80 FRB 8/80
	41	90	102	150	**1308 EK** **21308 CCK**	H 308 H 308	FRB 9/90 FRB 9/90	**2308 EK** **22308 CCK/W33** **–**	H 2308 H 2308 –	FRB 4/90 FRB 4/90 –

Page 3

Page 10

SNL plummer block housings for bearings on adapter sleeves
d_a **40 – 50** mm

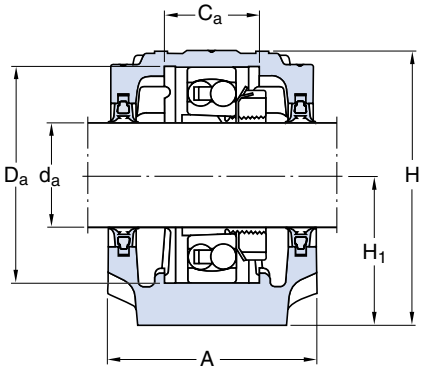

Double-lip seals
G design

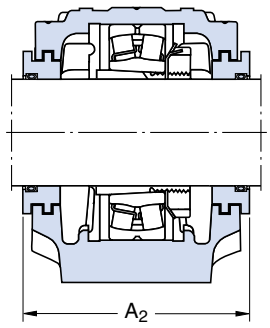

Labyrinth seals
S design

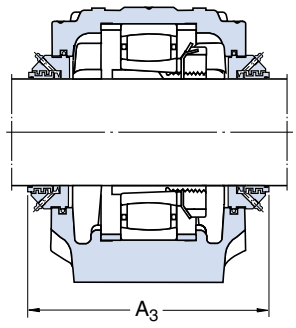

Taconite seals
ND design

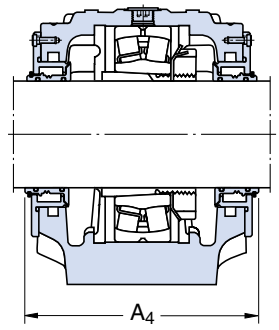

Oil seals
U design

Shaft	Housing Dimensions										Mass	Designations			
												Housing complete with two seals	Components Housing only	Seals	End cover
d_a	A	A_1	H	H_1	H_2	J	L	N	N_1	G					
mm	mm										kg	–			
40	85	60	109	60	25	170	205	20	15	12	2,90	**SNL 509 TG**	SNL 509	TSN 509 G	ASNH 509
												SNL 509 TA	SNL 509	TSN 509 A	ASNH 509
												SNL 509 TC	SNL 509	TSN 509 C	ASNH 509
												SNL 509 TS	SNL 509	TSN 509 S	ASNH 509
												SNL 509 TND	SNL 509	TSN 509 ND	ASNH 509
	95	70	127	70	28	210	255	24	18	16	4,40	**SNL 609 TG**	SNL 511-609	TSN 609 G	ASNH 511-609
												SNL 609 TA	SNL 511-609	TSN 609 A	ASNH 511-609
												SNL 609 TC	SNL 511-609	TSN 609 C	ASNH 511-609
												SNL 609 TS	SNL 511-609	TSN 609 S	ASNH 511-609
												SNL 609 TND	SNL 511-609	TSN 609 ND	ASNH 511-609
												SNL 609 TURU	SNL 511-609 RU	TSN 609 U	ASNH 511-609 R
45	90	60	113	60	25	170	205	20	15	12	3,20	**SNL 510 TG**	SNL 510-608	TSN 510 G	ASNH 510-608
												SNL 510 TA	SNL 510-608	TSN 510 A	ASNH 510-608
												SNL 510 TC	SNL 510-608	TSN 510 C	ASNH 510-608
												SNL 510 TS	SNL 510-608	TSN 510 S	ASNH 510-608
												SNL 510 TND	SNL 510-608	TSN 510 ND	ASNH 510-608
	105	70	133	70	30	210	255	24	18	16	5,10	**SNL 610 TG**	SNL 512-610	TSN 610 G	ASNH 512-610
												SNL 610 TA	SNL 512-610	TSN 610 A	ASNH 512-610
												SNL 610 TC	SNL 512-610	TSN 610 C	ASNH 512-610
												SNL 610 TS	SNL 512-610	TSN 610 S	ASNH 512-610
												SNL 610 TND	SNL 512-610	TSN 610 ND	ASNH 512-610
												SNL 610 TURU	SNL 512-610 RU	TSN 610 U	ASNH 512-610 R
50	95	70	128	70	28	210	255	24	18	16	4,40	**SNL 511 TG**	SNL 511-609	TSN 511 G	ASNH 511-609
												SNL 511 TA	SNL 511-609	TSN 511 A	ASNH 511-609
												SNL 511 TC	SNL 511-609	TSN 511 C	ASNH 511-609
												SNL 511 TS	SNL 511-609	TSN 511 S	ASNH 511-609
												SNL 511 TND	SNL 511-609	TSN 511 ND	ASNH 511-609
												SNL 511 TURU	SNL 211 RU	TSN 511 U	ASNH 513-611 R
	110	80	148	80	30	230	275	24	18	16	6,50	**SNL 611 TG**	SNL 513-611	TSN 611 G	ASNH 513-611
												SNL 611 TA	SNL 513-611	TSN 611 A	ASNH 513-611
												SNL 611 TC	SNL 513-611	TSN 611 C	ASNH 513-611
												SNL 611 TS	SNL 513-611	TSN 611 S	ASNH 513-611
												SNL 611 TND	SNL 513-611	TSN 611 ND	ASNH 513-611
												SNL 611 TURU	SNL 513-611 RU	TSN 611 U	ASNH 513-611 R

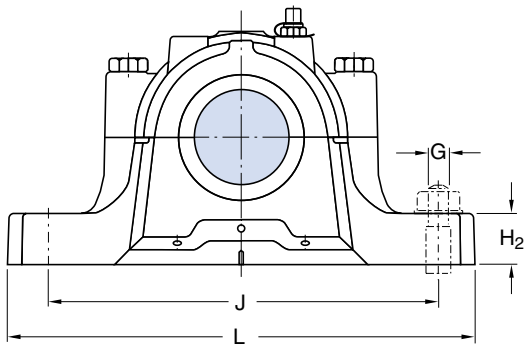

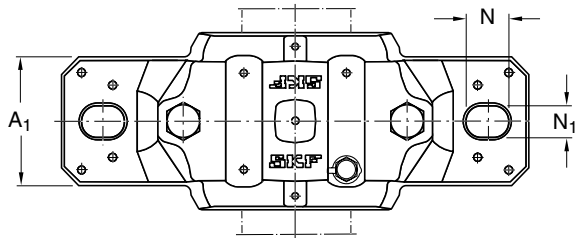

Shaft	Bearing seating		Width across seal			Appropriate bearings and associated components					
						Self-aligning ball bearing Spherical roller bearing	Adapter sleeve	Locating rings 2 per housing	Self-aligning ball bearing Spherical roller bearing CARB bearing	Adapter sleeve	Locating rings 2 per housing
d_a	C_a	D_a	A_2	A_3	A_4						
mm	mm		mm			–					
40	30	85	97	150	–	**1209 EK** **–**	H 209 –	FRB 5.5/85 –	**2209 EK** **22209 CCK/W33** **C 2209 K**	H 309 H 309 H 309 E	FRB 3.5/85 FRB 3.5/85 FRB 3.5/85
	44	100	107	155	112	**1309 EK** **21309 EK**	H 309 H 309	FRB 9.5/100 FRB 9.5/100	**2309 EK** **22309 CCK/W33** **–**	H 2309 H 2309 –	FRB 4/100 FRB 4/100 –
45	41	90	102	155	–	**1210 EK** **–**	H 210 –	FRB 10.5/90 –	**2210 EK** **22210 CCK/W33** **C 2210 K**	H 310 H 310 H 310 E	FRB 9/90 FRB 9/90 FRB 9/90
	48	110	117	165	124	**1310 EK** **21310 EK**	H 310 H 310	FRB 10.5/110 FRB 10.5/110	**2310 K** **22310 CCK/W33** **–**	H 2310 H 2310 –	FRB 4/110 FRB 4/110 –
50	44	100	107	165	112	**1211 EK** **–**	H 211 –	FRB 11.5/100 –	**2211 EK** **22211 EK** **C 2211 K**	H 311 H 311 H 311 E	FRB 9.5/100 FRB 9.5/100 FRB 9.5/100
	51	120	122	170	128	**1311 EK** **21311 EK**	H 311 H 311	FRB 11/120 FRB 11/120	**2311 K** **22311 EK** **–**	H 2311 H 2311 –	FRB 4/120 FRB 4/120 –

Page 3

Page 10

SNL plummer block housings for bearings on adapter sleeves
d_a **55 – 65** mm

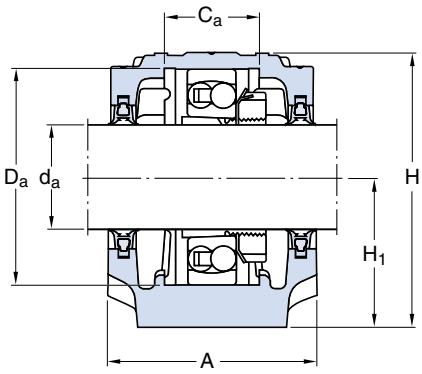

Double-lip seals
G design

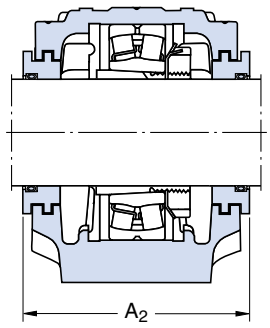

Labyrinth seals
S design

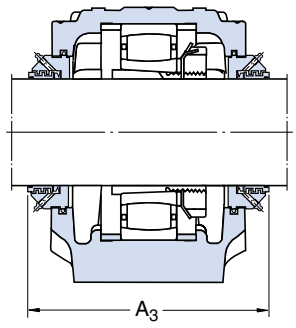

Taconite seals
ND design

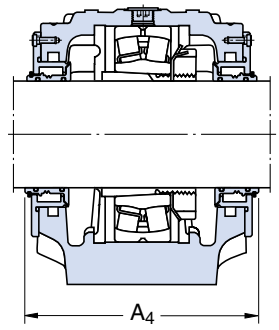

Oil seals
U design

Shaft	Housing Dimensions										Mass	Designations			
												Housing complete with two seals	Components Housing only	Seals	End cover
d_a	A	A_1	H	H_1	H_2	J	L	N	N_1	G					
mm	mm										kg	–			
55	105	70	134	70	30	210	255	24	18	16	5,10	**SNL 512 TG**	SNL 512-610	TSN 512 G	ASNH 512-610
												SNL 512 TA	SNL 512-610	TSN 512 A	ASNH 512-610
												SNL 512 TC	SNL 512-610	TSN 512 C	ASNH 512-610
												SNL 512 TS	SNL 512-610	TSN 512 S	ASNH 512-610
												SNL 512 TND	SNL 512-610	TSN 512 ND	ASNH 512-610
												SNL 512 TURU	SNL 212 RU	TSN 512 U	ASNH 515-612 R
	115	80	154	80	30	230	280	24	18	16	7,00	**SNL 612 TG**	SNL 515-612	TSN 612 G	ASNH 515-612
												SNL 612 TA	SNL 515-612	TSN 612 A	ASNH 515-612
												SNL 612 TC	SNL 515-612	TSN 612 C	ASNH 515-612
												SNL 612 TS	SNL 515-612	TSN 612 S	ASNH 515-612
												SNL 612 TND	SNL 515-612	TSN 612 ND	ASNH 515-612
												SNL 612 TURU	SNL 515-612 RU	TSN 612 U	ASNH 515-612 R
60	110	80	149	80	30	230	275	24	18	16	6,50	**SNL 513 TG**	SNL 513-611	TSN 513 G	ASNH 513-611
												SNL 513 TA	SNL 513-611	TSN 513 A	ASNH 513-611
												SNL 513 TC	SNL 513-611	TSN 513 C	ASNH 513-611
												SNL 513 TS	SNL 513-611	TSN 513 S	ASNH 513-611
												SNL 513 TND	SNL 513-611	TSN 513 ND	ASNH 513-611
												SNL 513 TURU	SNL 213 RU	TSN 513 U	ASNH 516-613 R
	120	90	175	95	32	260	315	28	22	20	9,50	**SNL 613 TG**	SNL 516-613	TSN 613 G	ASNH 516-613
												SNL 613 TA	SNL 516-613	TSN 613 A	ASNH 516-613
												SNL 613 TC	SNL 516-613	TSN 613 C	ASNH 516-613
												SNL 613 TS	SNL 516-613	TSN 613 S	ASNH 516-613
												SNL 613 TND	SNL 516-613	TSN 613 ND	ASNH 516-613
												SNL 613 TURU	SNL 516-613 RU	TSN 613 U	ASNH 516-613 R
65	115	80	155	80	30	230	280	24	18	16	7,00	**SNL 515 TG**	SNL 515-612	TSN 515 G	ASNH 515-612
												SNL 515 TA	SNL 515-612	TSN 515 A	ASNH 515-612
												SNL 515 TC	SNL 515-612	TSN 515 C	ASNH 515-612
												SNL 515 TS	SNL 515-612	TSN 515 S	ASNH 515-612
												SNL 515 TND	SNL 515-612	TSN 515 ND	ASNH 515-612
												SNL 515 TURU	SNL 215 RU	TSN 515 U	ASNH 518-615 R
	140	100	193	100	35	290	345	28	22	20	12,5	**SNL 615 TG**	SNL 518-615	TSN 615 G	ASNH 518-615
												SNL 615 TA	SNL 518-615	TSN 615 A	ASNH 518-615
												SNL 615 TC	SNL 518-615	TSN 615 C	ASNH 518-615
												SNL 615 TS	SNL 518-615	TSN 615 S	ASNH 518-615
												SNL 615 TND	SNL 518-615	TSN 615 ND	ASNH 518-615
												SNL 615 TURU	SNL 518-615 RU	TSN 615 U	ASNH 518-615 R

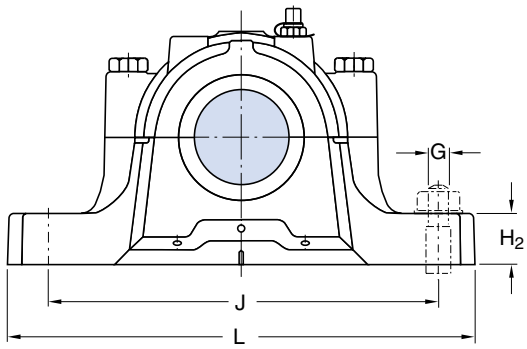

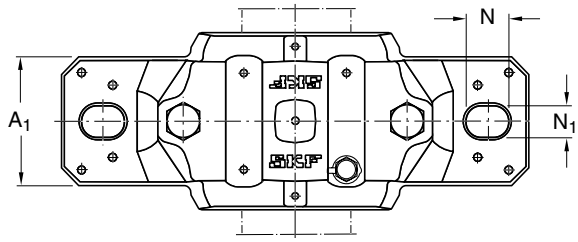

Shaft	Bearing seating		Width across seal			Appropriate bearings and associated components					
						Self-aligning ball bearing Spherical roller bearing	Adapter sleeve	Locating rings 2 per housing	Self-aligning ball bearing Spherical roller bearing CARB bearing	Adapter sleeve	Locating rings 2 per housing
d_a	C_a	D_a	A_2	A_3	A_4	–					
mm	mm		mm			–					
55	48	110	117	175	124	**1212 EK** **–**	H 212 –	FRB 13/110 –	**2212 EK** **22212 EK** **C 2212 K**	H 312 H 312 H 312 E	FRB 10/110 FRB 10/110 FRB 10/110
	56	130	127	175	134	**1312 EK** **21312 EK**	H 312 H 312	FRB 12.5/130 FRB 12.5/130	**2312 K** **22312 EK** **–**	H 2312 H 2312 –	FRB 5/130 FRB 5/130 –
60	51	120	122	180	128	**1213 EK** **–**	H 213 –	FRB 14/120 –	**2213 EK** **22213 CCK/W33** **C 2213 K**	H 313 H 313 H 313 E	FRB 10/120 FRB 10/120 FRB 10/120
	58	140	138	180	141	**1313 EK** **21313 EK**	H 313 H 313	FRB 12.5/140 FRB 12.5/140	**2313 K** **22313 EK** **–**	H 2313 H 2313 –	FRB 5/140 FRB 5/140 –
65	56	130	127	175	134	**1215 K** **–**	H 215 –	FRB 15.5/130 –	**2215 EK** **22215 EK** **C 2215 K**	H 315 H 315 H 315 E	FRB 12.5/130 FRB 12.5/130 FRB 12.5/130
	65	160	158	200	159	**1315 K** **21315 EK**	H 315 H 315	FRB 14/160 FRB 14/160	**2315 K** **22315 EK** **C 2315 K**	H 2315 H 2315 H 2315	FRB 5/160 FRB 5/160 FRB 5/160

Page 3

Page 10

SNL plummer block housings for bearings on adapter sleeves
d_a **70 – 85** mm

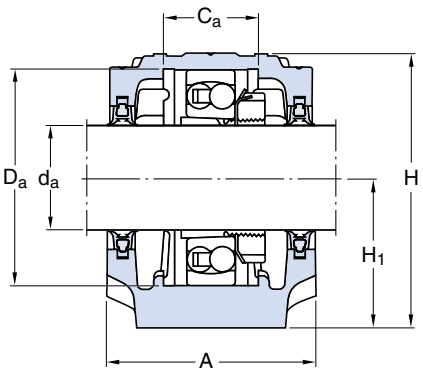

Double-lip seals
G design

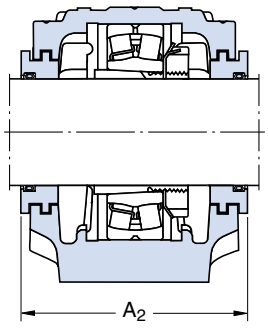

Labyrinth seals
S design

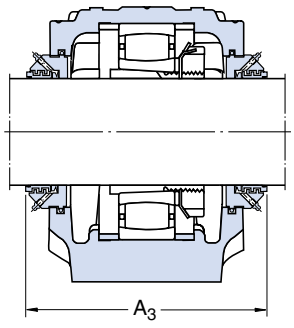

Taconite seals
ND design

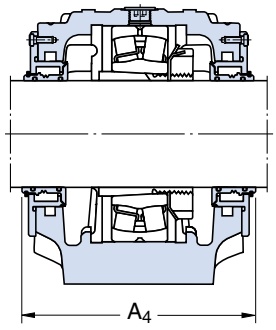

Oil seals
U design

Shaft	Housing Dimensions										Mass	Designations			
												Housing complete with two seals	Components Housing only	Seals	End cover
d_a	A	A_1	H	H_1	H_2	J	L	N	N_1	G					
mm	mm										kg	–			
70	120	90	177	95	32	260	315	28	22	20	9,50	**SNL 516 TG**	SNL 516-613	TSN 516 G	ASNH 516-613
												SNL 516 TA	SNL 516-613	TSN 516 A	ASNH 516-613
												SNL 516 TC	SNL 516-613	TSN 516 C	ASNH 516-613
												SNL 516 TS	SNL 516-613	TSN 516 S	ASNH 516-613
												SNL 516 TND	SNL 516-613	TSN 516 ND	ASNH 516-613
												SNL 516 TURU	SNL 216 RU	TSN 516 U	ASNH 216 R
	145	100	210	112	35	290	345	28	22	20	13,7	**SNL 616 TG**	SNL 519-616	TSN 616 G	ASNH 519-616
												SNL 616 TA	SNL 519-616	TSN 616 A	ASNH 519-616
												SNL 616 TC	SNL 519-616	TSN 616 C	ASNH 519-616
												SNL 616 TS	SNL 519-616	TSN 616 S	ASNH 519-616
												SNL 616 TND	SNL 519-616	TSN 616 ND	ASNH 519-616
												SNL 616 TURU	SNL 519-616 RU	TSN 616 U	ASNH 519-616 R
75	125	90	183	95	32	260	320	28	22	20	10,0	**SNL 517 TG**	SNL 517	TSN 517 G	ASNH 517
												SNL 517 TA	SNL 517	TSN 517 A	ASNH 517
												SNL 517 TC	SNL 517	TSN 517 C	ASNH 517
												SNL 517 TS	SNL 517	TSN 517 S	ASNH 517
												SNL 517 TND	SNL 517	TSN 517 ND	ASNH 517
												SNL 517 TURU	SNL 217 RU	TSN 517 U	ASNH 217 R
	160	110	218	112	40	320	380	32	26	24	17,6	**SNL 617 TG**	SNL 520-617	TSN 617 G	ASNH 520-617
												SNL 617 TA	SNL 520-617	TSN 617 A	ASNH 520-617
												SNL 617 TC	SNL 520-617	TSN 617 C	ASNH 520-617
												SNL 617 TS	SNL 520-617	TSN 617 S	ASNH 520-617
												SNL 617 TND	SNL 520-617	TSN 617 ND	ASNH 520-617
												SNL 617 TURU	SNL 520-617 RU	TSN 617 U	ASNH 520-617 R
80	140	100	194	100	35	290	345	28	22	20	12,5	**SNL 518 TG**	SNL 518-615	TSN 518 G	ASNH 518-615
												SNL 518 TA	SNL 518-615	TSN 518 A	ASNH 518-615
												SNL 518 TC	SNL 518-615	TSN 518 C	ASNH 518-615
												SNL 518 TS	SNL 518-615	TSN 518 S	ASNH 518-615
												SNL 518 TND	SNL 518-615	TSN 518 ND	ASNH 518-615
												SNL 518 TURU	SNL 218 RU	TSN 518 U	ASNH 218 R
85	145	100	212	112	35	290	345	28	22	20	13,7	**SNL 519 TG**	SNL 519-616	TSN 519 G	ASNH 519-616
												SNL 519 TA	SNL 519-616	TSN 519 A	ASNH 519-616
												SNL 519 TC	SNL 519-616	TSN 519 C	ASNH 519-616
												SNL 519 TS	SNL 519-616	TSN 519 S	ASNH 519-616
												SNL 519 TND	SNL 519-616	TSN 519 ND	ASNH 519-616
												SNL 519 TURU	SNL 519-616 RU	TSN 519 U	ASNH 519-616 R
	175	120	239	125	45	350	410	32	26	24	22,0	**SNL 619 TG**	SNL 522-619	TSN 619 G	ASNH 522-619
												SNL 619 TA	SNL 522-619	TSN 619 A	ASNH 522-619
												SNL 619 TC	SNL 522-619	TSN 619 C	ASNH 522-619
												SNL 619 TS	SNL 522-619	TSN 619 S	ASNH 522-619
												SNL 619 TND	SNL 522-619	TSN 619 ND	ASNH 522-619
												SNL 619 TURU	SNL 522-619 RU	TSN 619 U	ASNH 522-619 R

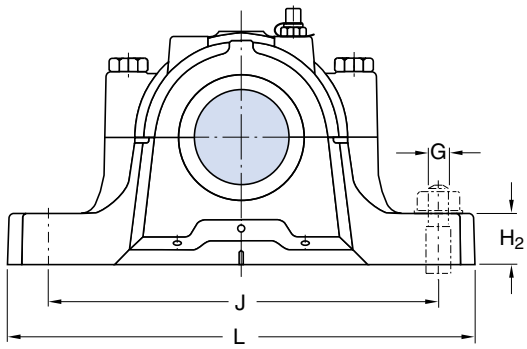

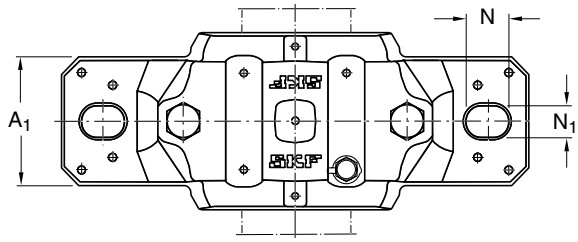

Shaft	Bearing seating		Width across seal			Appropriate bearings and associated components					
						Self-aligning ball bearing Spherical roller bearing	Adapter sleeve	Locating rings 2 per housing	Self-aligning ball bearing Spherical roller bearing CARB bearing	Adapter sleeve	Locating rings 2 per housing
d_a	C_a	D_a	A_2	A_3	A_4						
mm	mm		mm		–						
70	58	140	138	205	166	**1216 K** **–**	H 216 –	FRB 16/140 –	**2216 EK** **22216 EK** **C 2216 K**	H 316 H 316 H 316 E	FRB 12.5/140 FRB 12.5/140 FRB 12.5/140
	68	170	163	205	143	**1316 K** **21316 EK**	H 316 H 316	FRB 14.5/170 FRB 14.5/170	**2316 K** **22316 EK** **C 2316 K**	H 2316 H 2316 H 2316	FRB 5/170 FRB 5/170 FRB 5/170
75	61	150	143	210	143	**1217 K** **–**	H 217 –	FRB 16.5/150 –	**2217 K** **22217 EK** **C 2217 K**	H 317 H 317 H 317 E	FRB 12.5/150 FRB 12.5/150 FRB 12.5/150
	70	180	178	220	181	**1317 K** **21317 EK**	H 317 H 317	FRB 14.5/180 FRB 14.5/180	**2317 K** **22317 EK** **C 2317 K**	H 2317 H 2317 H 2317	FRB 5/180 FRB 5/180 FRB 5/180
80	65	160	158	225	159	**1218 K** **22218 EK**	H 218 H 318	FRB 17.5/160 FRB 12.5/160	**2218 K** **23218 CCK/W33** **C 2218 K**	H 318 H 2318 H 318 E	FRB 12.5/160 FRB 6.25/160 FRB 12.5/160
85	68	170	163	220	166	**1219 K** **–**	H 219 –	FRB 18/170 –	**2219 K** **22219 EK** **–**	H 319 H 319 –	FRB 12.5/170 FRB 12.5/170 –
	80	200	191	235	195	**1319 K** **21319 EK**	H 319 H 319	FRB 17.5/200 FRB 17.5/200	**2319 K** **22319 EK** **–**	H 2319 H 2319 –	FRB 6.5/200 FRB 6.5/200 –

Page 3

Page 10

SNL plummer block housings for bearings on adapter sleeves
d_a **90 – 135** mm

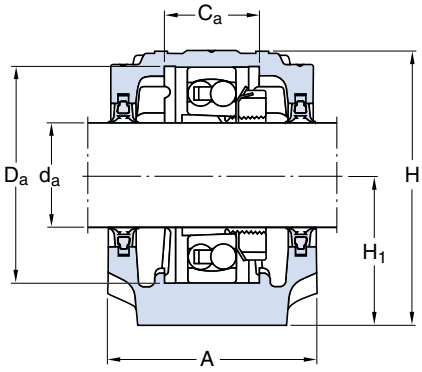

Double-lip seals
G design

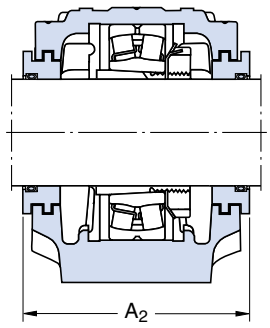

Labyrinth seals
S design

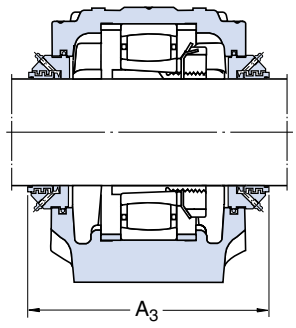

Taconite seals
ND design

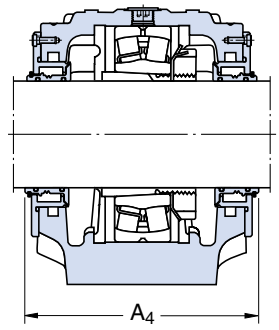

Oil seals
U design

Shaft	Housing Dimensions										Mass	Designations			
												Housing complete with two seals	Components Housing only	Seals	End cover
d_a	A	A_1	H	H_1	H_2	J	L	N	N_1	G					
mm	mm										kg	–			
90	160	110	218	112	40	320	380	32	26	24	17,6	**SNL 520 TG**	SNL 520-617	TSN 520 G	ASNH 520-617
												SNL 520 TA	SNL 520-617	TSN 520 A	ASNH 520-617
												SNL 520 TC	SNL 520-617	TSN 520 C	ASNH 520-617
												SNL 520 TS	SNL 520-617	TSN 520 S	ASNH 520-617
												SNL 520 TND	SNL 520-617	TSN 520 ND	ASNH 520-617
												SNL 520 TURU	SNL 520-617 RU	TSN 520 U	ASNH 520-617 R
	185	120	271	140	45	350	410	32	26	24	26,2	**SNL 620 TG**	SNL 524-620	TSN 620 G	ASNH 524-620
												SNL 620 TA	SNL 524-620	TSN 620 A	ASNH 524-620
												SNL 620 TC	SNL 524-620	TSN 620 C	ASNH 524-620
												SNL 620 TS	SNL 524-620	TSN 620 S	ASNH 524-620
												SNL 620 TND	SNL 524-620	TSN 620 ND	ASNH 524-620
												SNL 620 TURU	SNL 524-620 RU	TSN 620 U	ASNH 524-620 R
100	175	120	242	125	45	350	410	32	26	24	22,0	**SNL 522 TG**	SNL 522-619	TSN 522 G	ASNH 522-619
												SNL 522 TA	SNL 522-619	TSN 522 A	ASNH 522-619
												SNL 522 TC	SNL 522-619	TSN 522 C	ASNH 522-619
												SNL 522 TS	SNL 522-619	TSN 522 S	ASNH 522-619
												SNL 522 TND	SNL 522-619	TSN 522 ND	ASNH 522-619
												SNL 522 TURU	SNL 522-619 RU	TSN 522 U	ASNH 522-619 R
110	185	120	271	140	45	350	410	32	26	24	26,2	**SNL 524 TG**	SNL 524-620	TSN 524 G	ASNH 524-620
												SNL 524 TA	SNL 524-620	TSN 524 A	ASNH 524-620
												SNL 524 TC	SNL 524-620	TSN 524 C	ASNH 524-620
												SNL 524 TS	SNL 524-620	TSN 524 S	ASNH 524-620
												SNL 524 TND	SNL 524-620	TSN 524 ND	ASNH 524-620
												SNL 524 TURU	SNL 524-620 RU	TSN 524 U	ASNH 524-620 R
115	190	130	290	150	50	380	445	35	28	24	33,0	**SNL 526 TG**	SNL 526	TSN 526 G	ASNH 526
												SNL 526 TA	SNL 526	TSN 526 A	ASNH 526
												SNL 526 TC	SNL 526	TSN 526 C	ASNH 526
												SNL 526 TS	SNL 526	TSN 526 S	ASNH 526
												SNL 526 TND	SNL 526	TSN 526 ND	ASNH 526
												SNL 526 TURU	SNL 526 RU	TSN 526 U	ASNH 526 R
125	205	150	302	150	50	420	500	42	35	30	40,0	**SNL 528 TG**	SNL 528	TSN 528 G	ASNH 528
												SNL 528 TA	SNL 528	TSN 528 A	ASNH 528
												SNL 528 TC	SNL 528	TSN 528 C	ASNH 528
												SNL 528 TS	SNL 528	TSN 528 S	ASNH 528
												SNL 528 TND	SNL 528	TSN 528 ND	ASNH 528
												SNL 528 TURU	SNL 528 RU	TSN 528 U	ASNH 528 R
135	220	160	323	160	60	450	530	42	35	30	49,0	**SNL 530 TG**	SNL 530	TSN 530 G	ASNH 530
												SNL 530 TA	SNL 530	TSN 530 A	ASNH 530
												SNL 530 TC	SNL 530	TSN 530 C	ASNH 530
												SNL 530 TS	SNL 530	TSN 530 S	ASNH 530
												SNL 530 TND	SNL 530	TSN 530 ND	ASNH 530
												SNL 530 TURU	SNL 530 RU	TSN 530 U	ASNH 530 R

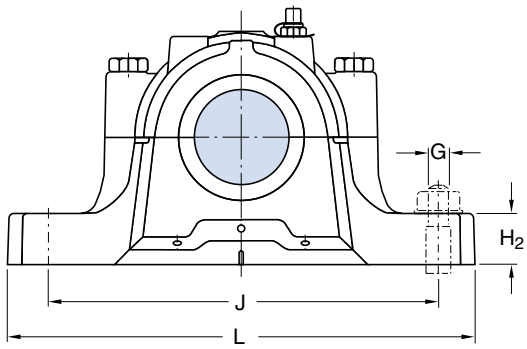

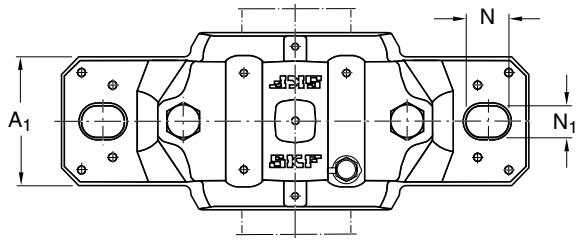

Shaft	Bearing seating		Width across seal			Appropriate bearings and associated components					
						Self-aligning ball bearing Spherical roller bearing	Adapter sleeve	Locating rings 2 per housing	Self-aligning ball bearing Spherical roller bearing CARB bearing	Adapter sleeve	Locating rings 2 per housing
d_a	C_a	D_a	A_2	A_3	A_4						
mm	mm		mm			–					
90	70	180	178	230	181	**1220 K** **22220 EK**	H 220 H 320	FRB 18/180 FRB 12/180	**2220 K** **23220 CCK/W33** **C 2220 K**	H 320 H 2320 H 320 E	FRB 12/180 FRB 4.85/180 FRB 12/180
	86	215	199	240	203	**1320 K** **21320 EK**	H 320 H 320	FRB 19.5/215 FRB 19.5/215	**2320 K** **22320 EK** **C 2320 K**	H 2320 H 2320 H 2320	FRB 6.5/215 FRB 6.5/215 FRB 6.5/215
100	80	200	191	250	195	**1222 K** **22222 EK**	H 222 H 322	FRB 21/200 FRB 13.5/200	**2222 K** **23222 CCK/W33** **C 2222 K**	H 322 H 2322 H 322 E	FRB 13.5/200 FRB 5.1/200 FRB 13.5/200
110	86	215	199	260	203	**1224 K** **22224 EK**	H 3024 H 3124	FRB 22/215 FRB 14/215	**–** **23224 CCK/W33** **C 3224 K**	– H 2324 H 2324 L	– FRB 5/215 FRB 5/215
115	90	230	208	265	211	**–** **22226 EK**	– H 3126	– FRB 13/230	**–** **23226 CCK/W33** **C 2226 K**	– H 2326 H 3126 L	– FRB 5/230 FRB 13/230
125	98	250	223	285	225	**–** **22228 CCK/W33**	– H 3128	– FRB 15/250	**–** **23228 CCK/W33** **C 2228 K**	– H 2328 H 3128 L	– FRB 5/250 FRB 15/250
135	106	270	241	295	241	**–** **22230 CCK/W33**	– H 3130	– FRB 16.5/270	**–** **23230 CCK/W33** **C 2230 K**	– H 2330 H 3130 L	– FRB 5/270 FRB 16.5/270

Page 3

Page 10

SNL plummer block housings for bearings on adapter sleeves
d_a **140** mm

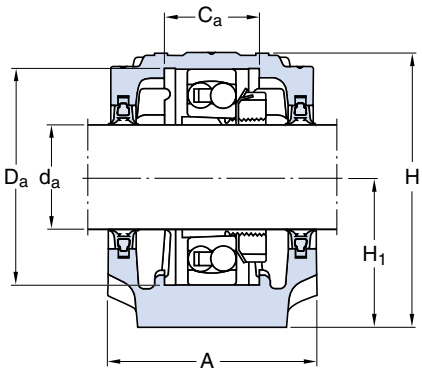

Double-lip seals
G design

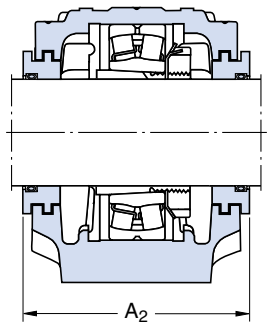

Labyrinth seals
S design

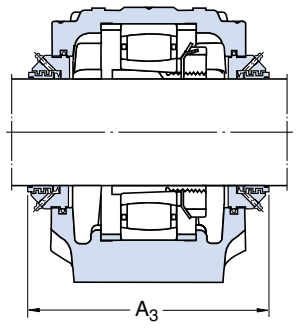

Taconite seals
ND design

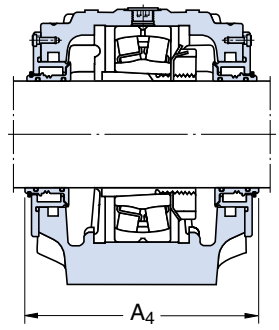

Oil seals
U design

Shaft	Housing Dimensions										Mass	Designations			
d_a	A	A_1	H	H_1	H_2	J	L	N	N_1	G		Housing complete with two seals	Components Housing only	Seals	End cover
mm	mm										kg	–			
140	235	160	344	170	60	470	550	42	35	30	55,0	**SNL 532 TG**	SNL 532	TSN 532 G	ASNH 532
												SNL 532 TA	SNL 532	TSN 532 A	ASNH 532
												SNL 532 TC	SNL 532	TSN 532 C	ASNH 532
												SNL 532 TS	SNL 532	TSN 532 S	ASNH 532
												SNL 532 TND	SNL 532	TSN 532 ND	ASNH 532
												SNL 532 TURU	SNL 532 RU	TSN 532 U	ASNH 532 R

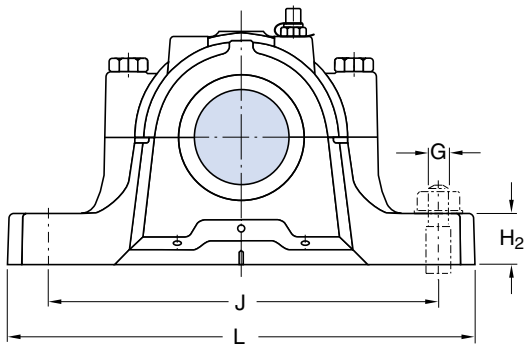

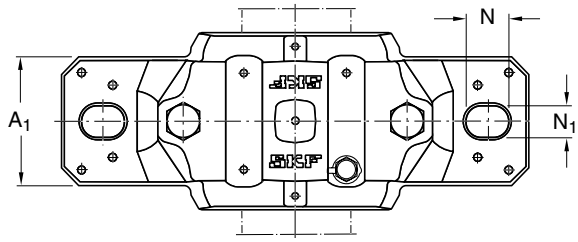

Shaft	Bearing seating		Width across seal			Appropriate bearings and associated components					
						Spherical roller bearing	Adapter sleeve	Locating rings 2 per housing	Spherical roller bearing CARB bearing	Adapter sleeve	Locating rings 2 per housing
d_a	C_a	D_a	A_2	A_3	A_4						
mm	mm		mm			–					
140	114	290	254	315	257	**22232 CCK/W33**	H 3132	FRB 17/290	**23232 CCK/W33** **C 3232 K**	H 2332 H 2332 L	FRB 5/290 FRB 5/290

Page 3

Page 10

SNL plummer block housings for bearings with cylindrical bore
d_a **25 – 40** mm

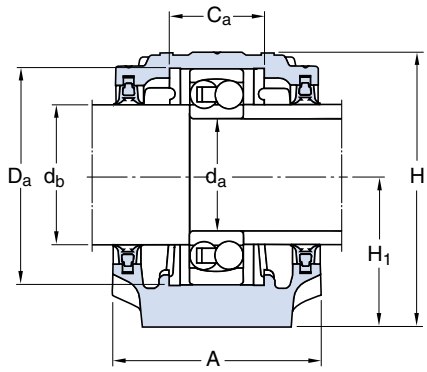

Double-lip seals
G design

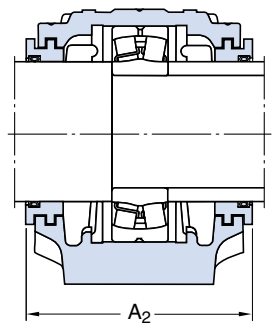

Labyrinth seals
S design

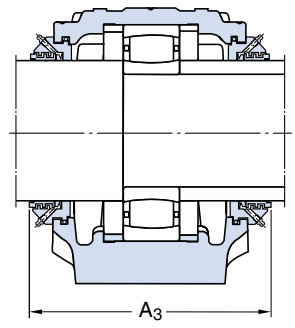

Taconite seals
ND design

Shaft	Housing Dimensions										Mass	Designations			
d_a	A	A_1	H	H_1	H_2	J	L	N	N_1	G		Housing complete with two seals	Components Housing only	Seals	End cover
mm	mm										kg	–			
25	67	46	74	40	19	130	165	20	15	12	1,40	**SNL 205 TG**	SNL 205	TSN 205 G	ASNH 506-605
												SNL 205 TC	SNL 505	2 FS 170	ASNH 505
												SNL 205 TS	SNL 205	TSN 205 S	ASNH 506-605
												SNL 205 TND	SNL 205	TSN 205 ND	ASNH 506-605
	77	52	89	50	22	150	185	20	15	12	1,90	**SNL 305 TG**	SNL 206-305	TSN 305 G	ASNH 507-606
												SNL 305 TA	SNL 206-305	TSN 305 A	ASNH 507-606
												SNL 305 TS	SNL 206-305	TSN 305 S	ASNH 507-606
												SNL 305 TND	SNL 206-305	TSN 305 ND	ASNH 507-606
30	77	52	89	50	22	150	185	20	15	12	1,90	**SNL 206 TG**	SNL 206-305	TSN 206 G	ASNH 507-606
												SNL 206 TA	SNL 206-305	TSN 206 A	ASNH 507-606
												SNL 206 TC	SNL 506-605	2 FS 170	ASNH 506-605
												SNL 206 TS	SNL 206-305	TSN 206 S	ASNH 507-606
												SNL 206 TND	SNL 206-305	TSN 206 ND	ASNH 507-606
	82	52	93	50	22	150	185	20	15	12	2,20	**SNL 306 TG**	SNL 507-606	TSN 306 G	ASNH 507-606
												SNL 306 TA	SNL 507-606	TSN 306 A	ASNH 507-606
												SNL 306 TS	SNL 507-606	TSN 306 S	ASNH 507-606
												SNL 306 TND	SNL 507-606	TSN 306 ND	ASNH 507-606
35	82	52	93	50	22	150	185	20	15	12	2,10	**SNL 207 TG**	SNL 207	TSN 207 G	ASNH 509
												SNL 207 TA	SNL 207	TSN 207 A	ASNH 509
												SNL 207 TC	SNL 507-606	4 FS 170	ASNH 507-606
												SNL 207 TS	SNL 207	TSN 207 S	ASNH 509
												SNL 207 TND	SNL 207	TSN 207 ND	ASNH 509
	85	60	108	60	25	170	205	20	15	12	2,75	**SNL 307 TG**	SNL 208-307	TSN 307 G	ASNH 510-608
												SNL 307 TA	SNL 208-307	TSN 307 A	ASNH 510-608
												SNL 307 TS	SNL 208-307	TSN 307 S	ASNH 510-608
												SNL 307 TND	SNL 208-307	TSN 307 ND	ASNH 510-608
40	85	60	108	60	25	170	205	20	15	12	2,75	**SNL 208 TG**	SNL 208-307	TSN 208 G	ASNH 510-608
												SNL 208 TA	SNL 208-307	TSN 208 A	ASNH 510-608
												SNL 208 TC	SNL 508-607	4 FS 170	ASNH 508-607
												SNL 208 TS	SNL 208-307	TSN 208 S	ASNH 510-608
												SNL 208 TND	SNL 208-307	TSN 208 ND	ASNH 510-608
	90	60	113	60	25	170	205	20	15	12	3,20	**SNL 308 TG**	SNL 510-608	TSN 308 G	ASNH 510-608
												SNL 308 TA	SNL 510-608	TSN 308 A	ASNH 510-608
												SNL 308 TS	SNL 510-608	TSN 308 S	ASNH 510-608
												SNL 308 TND	SNL 510-608	TSN 308 ND	ASNH 510-608

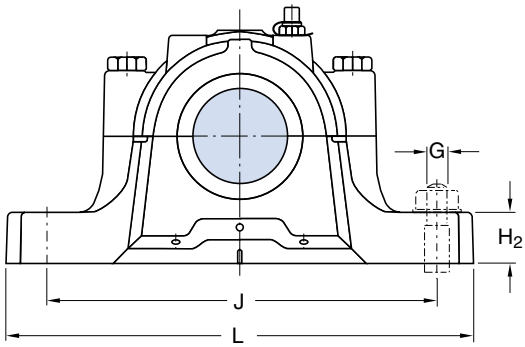

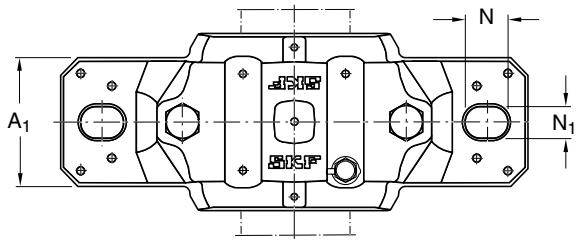

Shaft		Bearing seating		Width across seal		Appropriate bearings and locating rings			
						Self-aligning ball bearing Spherical roller bearing	Locating rings 2 per housing	Self-aligning ball bearing Spherical roller bearing CARB bearing	Locating rings 2 per housing
d_a	d_b	C_a	D_a	A_2	A_3				
mm		mm		mm		–			
25	30	25	52	90	140	**1205 E** **–**	FRB 5/52 –	**2205 E** **22205 CC/W33** **C 2205**	FRB 3.5/52 FRB 3.5/52 FRB 3.5/52
	30	32	62	89	140	**1305 E** **21305 CC**	FRB 7.5/62 FRB 7.5/62	**2305** **–** **–**	FRB 4/62 – –
30	35	32	62	89	150	**1206 E** **–**	FRB 8/62 –	**2206 E** **22206 CC/W33** **C 2206**	FRB 6/62 FRB 6/62 FRB 6/62
	35	34	72	94	155	**1306 E** **21306 CC**	FRB 7.5/72 FRB 7.5/72	**2306** **–** **–**	FRB 3.5/72 – –
35	45	34	72	96	160	**1207 E** **–**	FRB 8.5/72 –	**2207 E** **22207 CC/W33** **C 2207**	FRB 5.5/72 FRB 5.5/72 FRB 5.5/72
	45	39	80	99	145	**1307 E** **21307 CC**	FRB 9/80 FRB 9/80	**2307 E** **–** **–**	FRB 4/80 – –
40	50	39	80	99	160	**1208 E** **–**	FRB 10.5/80 –	**2208 E** **22208 E** **C 2208**	FRB 8/80 FRB 8/80 FRB 8/80
	50	41	90	102	167	**1308 E** **21308 E**	FRB 9/90 FRB 9/90	**2308 E** **22308 CC/W33** **–**	FRB 4/90 FRB 4/90 –

Page 3

Page 10

SNL plummer block housings for bearings with cylindrical bore
d_a **45 – 60** mm

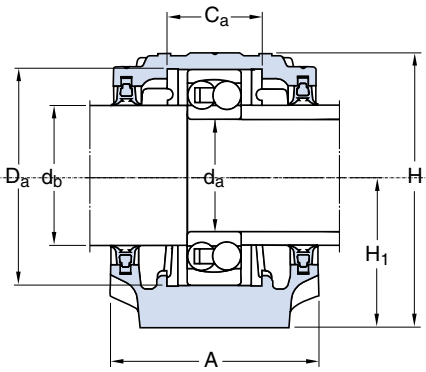

Double-lip seals
G design

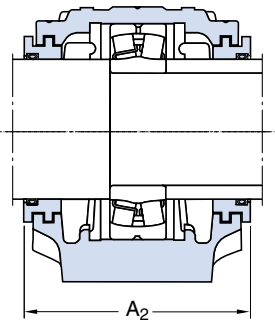

Labyrinth seals
S design

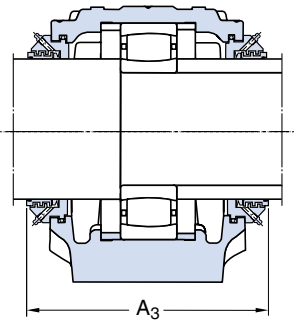

Taconite seals
ND design

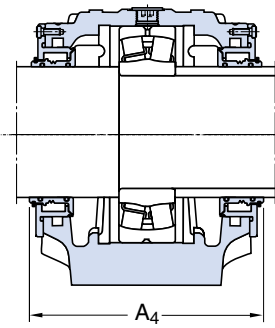

Oil seals
U design

Shaft	Housing Dimensions										Mass	Designations			
												Housing complete with two seals	Components Housing only	Seals	End cover
d_a	A	A_1	H	H_1	H_2	J	L	N	N_1	G					
mm	mm										kg	–			
45	85	60	109	60	25	170	205	20	15	12	2,75	**SNL 209 TG**	SNL 209	TSN 209 G	ASNH 511-609
												SNL 209 TA	SNL 209	TSN 209 A	ASNH 511-609
												SNL 209 TC	SNL 509	4 FS 170	ASNH 509
												SNL 209 TS	SNL 209	TSN 209 S	ASNH 511-609
												SNL 209 TND	SNL 209	TSN 209 ND	ASNH 511-609
	95	70	128	70	28	210	255	24	18	16	4,40	**SNL 309 TG**	SNL 511-609	TSN 309 G	ASNH 511-609
												SNL 309 TA	SNL 511-609	TSN 309 A	ASNH 511-609
												SNL 309 TS	SNL 511-609	TSN 309 S	ASNH 511-609
												SNL 309 TND	SNL 511-609	TSN 309 ND	ASNH 511-609
50	90	60	113	60	25	170	205	20	15	12	3,00	**SNL 210 TG**	SNL 210	TSN 210 G	ASNH 512-610
												SNL 210 TA	SNL 210	TSN 210 A	ASNH 512-610
												SNL 210 TC	SNL 510-608	4 FS 170	ASNH 510-608
												SNL 210 TS	SNL 210	TSN 210 S	ASNH 512-610
												SNL 210 TND	SNL 210	TSN 210 ND	ASNH 512-610
	105	70	134	70	30	210	255	24	18	16	5,10	**SNL 310 TG**	SNL 512-610	TSN 310 G	ASNH 512-610
												SNL 310 TA	SNL 512-610	TSN 310 A	ASNH 512-610
												SNL 310 TS	SNL 512-610	TSN 310 S	ASNH 512-610
												SNL 310 TND	SNL 512-610	TSN 310 ND	ASNH 512-610
55	95	70	128	70	28	210	255	24	18	16	4,20	**SNL 211 TG**	SNL 211	TSN 211 G	ASNH 513-611
												SNL 211 TA	SNL 211	TSN 211 A	ASNH 513-611
												SNL 211 TC	SNL 511-609	4 FS 170	ASNH 511-609
												SNL 211 TS	SNL 211	TSN 211 S	ASNH 513-611
												SNL 211 TND	SNL 211	TSN 211 ND	ASNH 513-611
	110	80	149	80	30	230	275	24	18	16	6,50	**SNL 311 TG**	SNL 513-611	TSN 311 G	ASNH 513-611
												SNL 311 TA	SNL 513-611	TSN 311 A	ASNH 513-611
												SNL 311 TS	SNL 513-611	TSN 311 S	ASNH 513-611
												SNL 311 TND	SNL 513-611	TSN 311 ND	ASNH 513-611
60	105	70	134	70	30	210	255	24	18	16	4,75	**SNL 212 TG**	SNL 212	TSN 212 G	ASNH 515-612
												SNL 212 TA	SNL 212	TSN 212 A	ASNH 515-612
												SNL 212 TC	SNL 512-610	4 FS 170	ASNH 512-610
												SNL 212 TS	SNL 212	TSN 212 S	ASNH 515-612
												SNL 212 TND	SNL 212	TSN 212 ND	ASNH 515-612
	115	80	155	80	30	230	280	24	18	16	7,00	**SNL 312 TG**	SNL 515-612	TSN 312 G	ASNH 515-612
												SNL 312 TA	SNL 515-612	TSN 312 A	ASNH 515-612
												SNL 312 TS	SNL 515-612	TSN 312 S	ASNH 515-612
												SNL 312 TND	SNL 515-612	TSN 312 ND	ASNH 515-612
												SNL 312 TURU	SNL 215 RU	TSN 312 U	ASNH 518-615 R

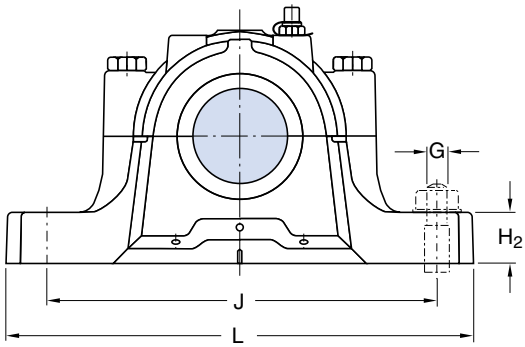

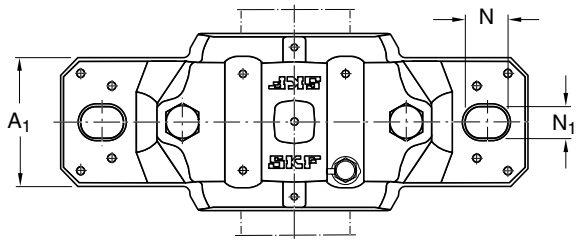

Shaft		Bearing seating		Width across seal			Appropriate bearings and locating rings			
							Self-aligning ball bearing Spherical roller bearing	Locating rings 2 per housing	Self-aligning ball bearing Spherical roller bearing CARB bearing	Locating rings 2 per housing
d_a	d_b	C_a	D_a	A_2	A_3	A_4				
mm		mm		mm			–			
45	55	30	85	97	160	–	**1209 E** **–**	FRB 5.5/85 –	**2209 E** **22209 CC/W33** **C 2209**	FRB 3.5/85 FRB 3.5/85 FRB 3.5/85
	55	44	100	107	172	–	**1309 E** **21309 E**	FRB 9.5/100 FRB 9.5/100	**2309 E** **22309 CC/W33** **–**	FRB 4/100 FRB 4/100 –
50	60	41	90	102	165	–	**1210 E** **–**	FRB 10.5/90 –	**2210 E** **22210 CC/W33** **C 2210**	FRB 9/90 FRB 9/90 FRB 9/90
	60	48	110	117	180	–	**1310 E** **21310 E**	FRB 10.5/110 FRB 10.5/110	**2310** **22310 CC/W33** **–**	FRB 4/110 FRB 4/110 –
55	65	44	100	107	170	–	**1211 E** **–**	FRB 11.5/100 –	**2211 E** **22211 E** **C 2211**	FRB 9.5/100 FRB 9.5/100 FRB 9.5/100
	65	51	120	122	185	–	**1311 E** **21311 E**	FRB 11/120 FRB 11/120	**2311** **22311 E** **–**	FRB 4/120 FRB 4/120 –
60	70	48	110	117	185	–	**1212 E** **–**	FRB 13/110 –	**2212 E** **22212 E** **C 2212**	FRB 10/110 FRB 10/110 FRB 10/110
	70	56	130	127	197	134	**1312** **21312 E**	FRB 12.5/130 FRB 12.5/130	**2312** **22312 E** **–**	FRB 5/130 FRB 5/130 –

Page 3

Page 10

SNL plummer block housings for bearings with cylindrical bore
d_a **65 – 80** mm

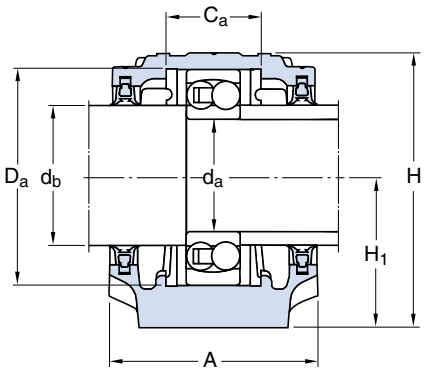

Double-lip seals
G design

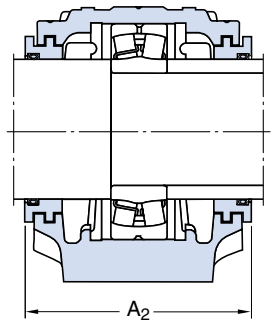

Labyrinth seals
S design

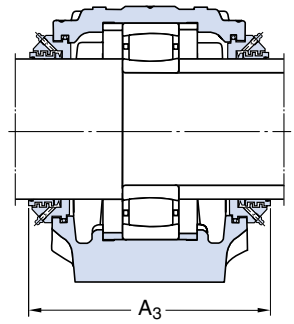

Taconite seals
ND design

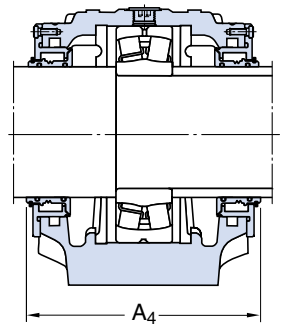

Oil seals
U design

Shaft	Housing Dimensions										Mass	Designations			
												Housing complete with two seals	Components Housing only	Seals	End cover
d_a	A	A_1	H	H_1	H_2	J	L	N	N_1	G					
mm	mm										kg	–			
65	110	80	149	80	30	230	275	24	18	16	6,10	**SNL 213 TG**	SNL 213	TSN 213 G	ASNH 516-613
												SNL 213 TA	SNL 213	TSN 213 A	ASNH 516-613
												SNL 213 TC	SNL 513-611	4 FS 170	ASNH 513-611
												SNL 213 TS	SNL 213	TSN 213 S	ASNH 516-613
												SNL 213 TND	SNL 213	TSN 213 ND	ASNH 516-613
	120	90	177	95	32	260	315	28	22	20	9,50	**SNL 313 TG**	SNL 516-613	TSN 313 G	ASNH 516-613
												SNL 313 TA	SNL 516-613	TSN 313 A	ASNH 516-613
												SNL 313 TS	SNL 516-613	TSN 313 S	ASNH 516-613
												SNL 313 TND	SNL 516-613	TSN 313 ND	ASNH 516-613
												SNL 313 TURU	SNL 216 RU	TSN 313 U	ASNH 216 R
70	125	90	183	95	32	260	320	28	22	20	10,0	**SNL 314 TG**	SNL 517	TSN 314 G	ASNH 517
												SNL 314 TA	SNL 517	TSN 314 A	ASNH 517
												SNL 314 TS	SNL 517	TSN 314 S	ASNH 517
												SNL 314 TND	SNL 517	TSN 314 ND	ASNH 517
												SNL 314 TURU	SNL 217 RU	TSN 314 U	ASNH 217 R
75	115	80	155	80	30	230	280	24	18	16	6,60	**SNL 215 TG**	SNL 215	TSN 215 G	ASNH 518-615
												SNL 215 TA	SNL 215	TSN 215 A	ASNH 518-615
												SNL 215 TC	SNL 515-612	4 FS 170	ASNH 515-612
												SNL 215 TS	SNL 215	TSN 215 S	ASNH 518-615
												SNL 215 TND	SNL 215	TSN 215 ND	ASNH 518-615
	140	100	194	100	35	290	345	28	22	20	12,5	**SNL 315 TG**	SNL 518-615	TSN 315 G	ASNH 518-615
												SNL 315 TA	SNL 518-615	TSN 315 A	ASNH 518-615
												SNL 315 TS	SNL 518-615	TSN 315 S	ASNH 518-615
												SNL 315 TND	SNL 518-615	TSN 315 ND	ASNH 518-615
												SNL 315 TURU	SNL 218 RU	TSN 315 U	ASNH 218 R
80	120	90	177	95	32	260	315	28	22	20	9,00	**SNL 216 TG**	SNL 216	TSN 216 G	ASNH 216
												SNL 216 TA	SNL 216	TSN 216 A	ASNH 216
												SNL 216 TC	SNL 516-613	4 FS 170	ASNH 516-613
												SNL 216 TS	SNL 216	TSN 216 S	ASNH 216
												SNL 216 TND	SNL 216	TSN 216 ND	ASNH 216
	145	100	212	112	35	290	345	28	22	20	13,7	**SNL 316 TG**	SNL 519-616	TSN 316 G	ASNH 519-616
												SNL 316 TA	SNL 519-616	TSN 316 A	ASNH 519-616
												SNL 316 TS	SNL 519-616	TSN 316 S	ASNH 519-616
												SNL 316 TND	SNL 519-616	TSN 316 ND	ASNH 519-616
												SNL 316 TURU	SNL 519-616 RU	TSN 316 U	ASNH 519-616 R

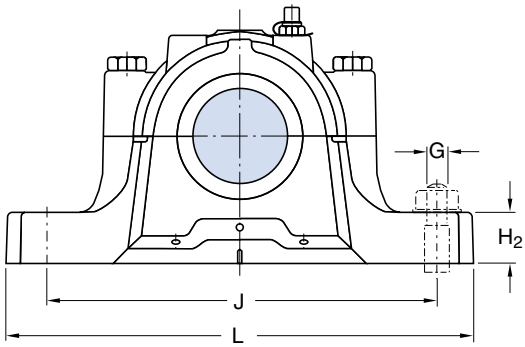

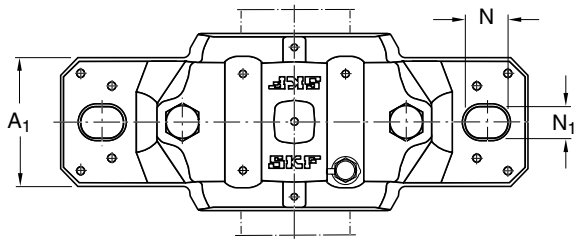

Shaft		Bearing seating		Width across seal			Appropriate bearings and locating rings			
							Self-aligning ball bearing Spherical roller bearing	Locating rings 2 per housing	Self-aligning ball bearing Spherical roller bearing CARB bearing	Locating rings 2 per housing
d_a	d_b	C_a	D_a	A_2	A_3	A_4				
mm		mm		mm			–			
65	75	51	120	128	190	–	**1213 E** **–**	FRB 14/120 –	**2213 E** **22213 CC/W33** **C 2213**	FRB 10/120 FRB 10/120 FRB 10/120
	75	58	140	138	200	141	**1313 E** **21313 E**	FRB 12.5/140 FRB 12.5/140	**2313** **22313 E** **–**	FRB 5/140 FRB 5/140 –
70	80	61	150	143	205	143	**1314** **21314 E**	FRB 13/150 FRB 13/150	**2314** **22314 E** **C 2314**	FRB 5/150 FRB 5/150 FRB 5/150
75	85	56	130	133	195	–	**1215** **–**	FRB 15.5/130 –	**2215 E** **22215 E** **C 2215**	FRB 12.5/130 FRB 12.5/130 FRB 12.5/130
	85	65	160	158	220	159	**1315** **21315 E**	FRB 14/160 FRB 14/160	**2315** **22315 E** **C 2315**	FRB 5/160 FRB 5/160 FRB 5/160
80	90	58	140	138	200	–	**1216** **–**	FRB 16/140 –	**2216 E** **22216 E** **C 2216**	FRB 12.5/140 FRB 12.5/140 FRB 12.5/140
	90	68	170	163	218	166	**1316** **21316 E**	FRB 14.5/170 FRB 14.5/170	**2316** **22316 E** **C 2316**	FRB 5/170 FRB 5/170 FRB 5/170

Page 3

Page 10

SNL plummer block housings for bearings with cylindrical bore
d_a **85 – 130** mm

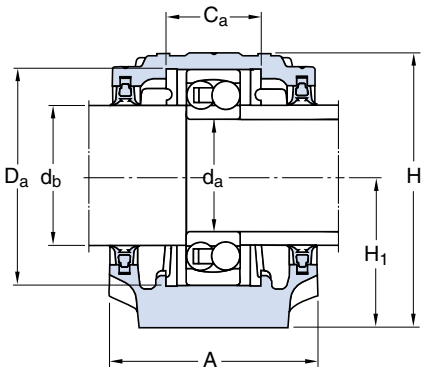

Double-lip seals
G design

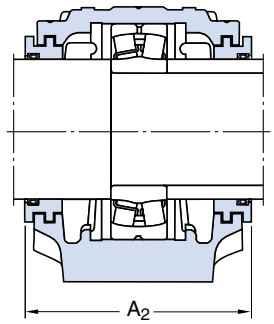

Labyrinth seals
S design

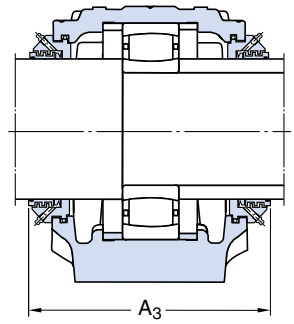

Taconite seals
ND design

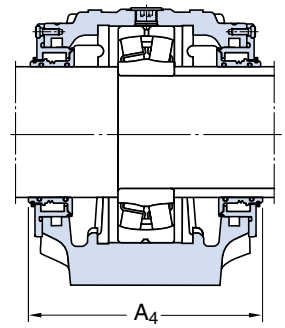

Oil seals
U design

Shaft	Housing Dimensions										Mass	Designations			
												Housing complete with two seals	Components Housing only	Seals	End cover
d_a	A	A_1	H	H_1	H_2	J	L	N	N_1	G					
mm	mm										kg	–			
85	125	90	183	95	32	260	320	28	22	20	9,50	**SNL 217 TG**	SNL 217	TSN 217 G	ASNH 217
												SNL 217 TA	SNL 217	TSN 217 A	ASNH 217
												SNL 217 TC	SNL 517	4 FS 170	ASNH 517
												SNL 217 TS	SNL 217	TSN 217 S	ASNH 217
												SNL 217 TND	SNL 217	TSN 217 ND	ASNH 217
	160	110	218	112	40	320	380	32	26	24	17,6	**SNL 317 TG**	SNL 520-617	TSN 317 G	ASNH 520-617
												SNL 317 TA	SNL 520-617	TSN 317 A	ASNH 520-617
												SNL 317 TS	SNL 520-617	TSN 317 S	ASNH 520-617
												SNL 317 TND	SNL 520-617	TSN 317 ND	ASNH 520-617
												SNL 317 TURU	SNL 520-617 RU	TSN 317 U	ASNH 520-617 R
90	140	100	194	100	35	290	345	28	22	20	11,8	**SNL 218 TG**	SNL 218	TSN 218 G	ASNH 218
												SNL 218 TA	SNL 218	TSN 218 A	ASNH 218
												SNL 218 TC	SNL 518-615	4 FS 170	ASNH 518-615
												SNL 218 TS	SNL 218	TSN 218 S	ASNH 218
												SNL 218 TND	SNL 218	TSN 218 ND	ASNH 218
95	175	120	242	125	45	350	410	32	26	24	22,0	**SNL 319 TA**	SNL 522-619	TSN 319 A	ASNH 522-619
												SNL 319 TS	SNL 522-619	TSN 319 S	ASNH 522-619
												SNL 319 TND	SNL 522-619	TSN 319 ND	ASNH 522-619
												SNL 319 TURU	SNL 522-619 RU	TSN 319 U	ASNH 522-619 R
100	160	110	218	112	40	320	380	32	26	24	17,6	**SNL 220 TG**	SNL 520-617	TSN 220 G	ASNH 520-617
												SNL 220 TA	SNL 520-617	TSN 220 A	ASNH 520-617
												SNL 220 TS	SNL 520-617	TSN 220 S	ASNH 520-617
												SNL 220 TND	SNL 520-617	TSN 220 ND	ASNH 520-617
	185	120	271	140	45	350	410	32	26	24	26,2	**SNL 320 TA**	SNL 524-620	TSN 320 A	ASNH 524-620
												SNL 320 TS	SNL 524-620	TSN 320 S	ASNH 524-620
												SNL 320 TND	SNL 524-620	TSN 320 ND	ASNH 524-620
												SNL 320 TURU	SNL 524-620 RU	TSN 320 U	ASNH 524-620 R
110	175	120	242	125	45	350	410	32	26	24	22,0	**SNL 222 TG**	SNL 522-619	TSN 222 G	ASNH 522-619
												SNL 222 TA	SNL 522-619	TSN 222 A	ASNH 522-619
												SNL 222 TS	SNL 522-619	TSN 222 S	ASNH 522-619
												SNL 222 TND	SNL 522-619	TSN 222 ND	ASNH 522-619
120	185	120	271	140	45	350	410	32	26	24	26,2	**SNL 224 TG**	SNL 524-620	TSN 224 G	ASNH 524-620
												SNL 224 TA	SNL 524-620	TSN 224 A	ASNH 524-620
												SNL 224 TS	SNL 524-620	TSN 224 S	ASNH 524-620
												SNL 224 TND	SNL 524-620	TSN 224 ND	ASNH 524-620
130	190	130	290	150	50	380	445	35	28	24	33,0	**SNL 226 TG**	SNL 526	TSN 226 G	ASNH 526
												SNL 226 TA	SNL 526	TSN 226 A	ASNH 526
												SNL 226 TS	SNL 526	TSN 226 S	ASNH 526
												SNL 226 TND	SNL 526	TSN 226 ND	ASNH 526

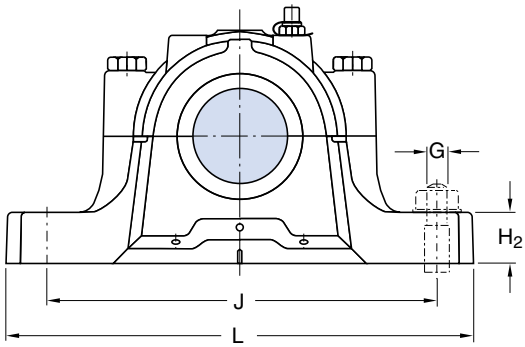

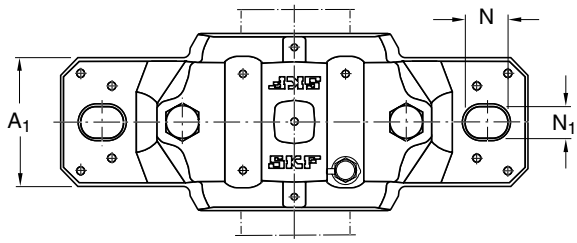

Shaft		Bearing seating		Width across seal			Appropriate bearings and locating rings			
							Self-aligning ball bearing Spherical roller bearing	Locating rings 2 per housing	Self-aligning ball bearing Spherical roller bearing CARB bearing	Locating rings 2 per housing
d_a	d_b	C_a	D_a	A_2	A_3	A_4	–			
mm		mm		mm			–			
85	95	61	150	143	205	–	**1217** **–**	FRB 16.5/150 –	**2217** **22217 E** **C 2217**	FRB 12.5/150 FRB 12.5/150 FRB 12.5/150
	95	70	180	178	238	181	**1317** **21317 E**	FRB 14.5/180 FRB 14.5/180	**2317** **22317 E** **C 2317**	FRB 5/180 FRB 5/180 FRB 5/180
90	100	65	160	158	220	–	**1218** **22218 E**	FRB 17.5/160 FRB 12.5/160	**2218** **23218 CC/W33** **C 2218**	FRB 12.5/160 FRB 6.25/160 FRB 12.5/160
95	110	80	200	191	253	195	**1319** **21319 E**	FRB 17.5/200 FRB 17.5/200	**2319** **22319 E** **–**	FRB 6.5/200 FRB 6.5/200 –
100	115	70	180	178	245	–	**1220** **22220 E**	FRB 18/180 FRB 12/180	**2220** **23220 CC/W33** **C 2220**	FRB 12/180 FRB 4.85/180 FRB 12/180
	115	86	215	199	260	203	**1320** **21320 E**	FRB 19.5/215 FRB 19.5/215	**2320** **22320 E** **C 2320**	FRB 6.5/215 FRB 6.5/215 FRB 6.5/215
110	125	80	200	191	255	–	**1222** **22222 E**	FRB 21/200 FRB 13.5/200	**2222** **23222 CC/W33** **C 2222**	FRB 13.5/200 FRB 5.1/200 FRB 13.5/200
120	135	86	215	199	270	–	**1224** **22224 E**	FRB 22/215 FRB 14/215	**–** **23224 CC/W33** **C 3224**	– FRB 5/215 FRB 5/215
130	145	90	230	208	275	–	**1226** **22226 E**	FRB 22/230 FRB 13/230	**–** **23226 CC/W33** **C 2226**	– FRB 5/230 FRB 13/230

Page 3

Page 10

SNL plummer block housings for bearings with cylindrical bore
d_a **140 – 160** mm

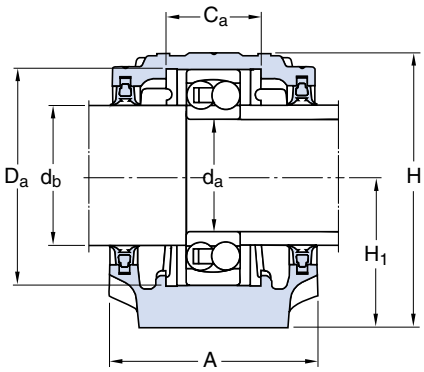

Double-lip seals
G design

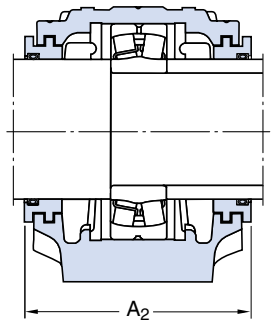

Labyrinth seals
S design

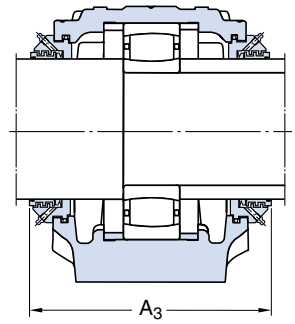

Taconite seals
ND design

Shaft	Housing Dimensions										Mass	Designations			
												Housing complete with two seals	Components Housing only	Seals	End cover
d_a	A	A_1	H	H_1	H_2	J	L	N	N_1	G					
mm	mm										kg	–			
140	205	150	302	150	50	420	500	42	35	30	40,0	**SNL 228 TG**	SNL 528	TSN 228 G	ASNH 528
												SNL 228 TA	SNL 528	TSN 228 A	ASNH 528
												SNL 228 TS	SNL 528	TSN 228 S	ASNH 528
												SNL 228 TND	SNL 528	TSN 228 ND	ASNH 528
150	220	160	323	160	60	450	530	42	35	30	49,0	**SNL 230 TG**	SNL 530	TSN 230 G	ASNH 530
												SNL 230 TA	SNL 530	TSN 230 A	ASNH 530
												SNL 230 TS	SNL 530	TSN 230 S	ASNH 530
												SNL 230 TND	SNL 530	TSN 230 ND	ASNH 530
160	235	160	344	170	60	470	550	42	35	30	55,0	**SNL 232 TG**	SNL 532	TSN 232 G	ASNH 532
												SNL 232 TA	SNL 532	TSN 232 A	ASNH 532
												SNL 232 TS	SNL 532	TSN 232 S	ASNH 532
												SNL 232 TND	SNL 532	TSN 232 ND	ASNH 532

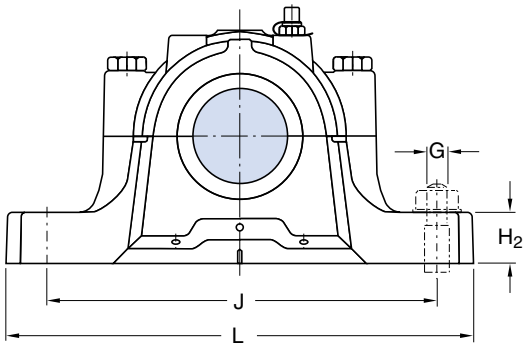

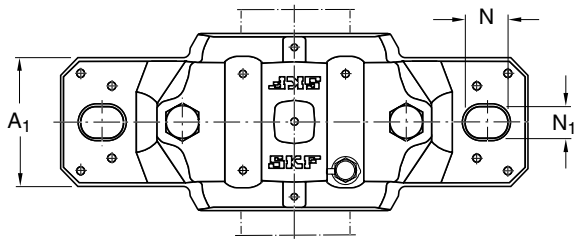

Shaft		Bearing seating		Width across seal		Appropriate bearings and locating rings			
						Spherical roller bearing	Locating rings 2 per housing	Spherical roller bearing CARB bearing	Locating rings 2 per housing
d_a	d_b	C_a	D_a	A_2	A_3				
mm		mm		mm		–			
140	155	98	250	223	290	**22228 CC/W33**	FRB 15/250	**23228 CC/W33** **C 2228**	FRB 5/250 FRB 15/250
150	165	106	270	241	310	**22230 CC/W33**	FRB 16.5/270	**23230 CC/W33** **C 2230**	FRB 5/270 FRB 16.5/270
160	175	114	290	254	325	**22232 CC/W33**	FRB 17/290	**23232 CC/W33** **C 3232**	FRB 5/290 FRB 5/290

Page 3

Page 10

Sealing arrangements for SNL plummer block housings

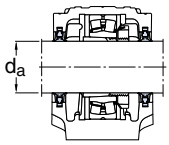

Housing series 5

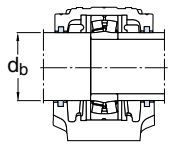

Housing series 2

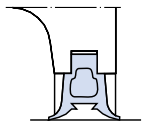

Design G
Split

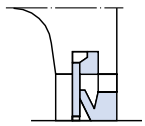

Design A
Unsplit

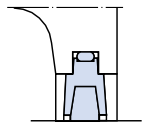

Design C
Split

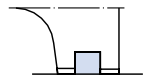

Design C
Felt strips
Split

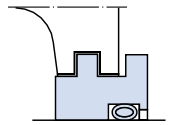

Design S
Unsplit

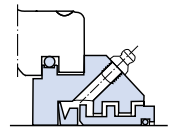

Design ND

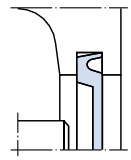

End cover

Housing Size	**Shaft diameter** d_a, d_b	**Seal sets** Design G 2 double-lip seals	Design A 2 V-ring seals	Loose V-ring	Design C 2 felt strips	Loose felt strips	Design S 2 labyrinth seals	Design ND	**End cover**
–	mm	–							–
505	20	TSN 505 G	TSN 505 A	CR 400200	TSN 505 C	–	2 × TSN 505 S	2 × TSN 505 ND	ASNH 505
	30	–	–	–	–	2 × FS 170	–	–	
205	20	TSN 605 G	TSN 605 A	CR 400200	TSN 605 C	–	2 × TSN 605 S	2 × TSN 605 ND	ASNH 506-605
	25	TSN 506 G	TSN 506 A	CR 400250	TSN 506 C	–	2 × TSN 506 S	2 × TSN 506 ND	
	30	TSN 205 G	–	–	–	–	2 × TSN 205 S	2 × TSN 205 ND	
	35	–	–	–	–	2 × FS 170	–	–	
506-605	20	TSN 605 G	TSN 605 A	CR 400200	TSN 605 C	–	2 × TSN 605 S	2 × TSN 605 ND	ASNH 506-605
	25	TSN 506 G	TSN 506 A	CR 400250	TSN 506 C	–	2 × TSN 506 S	2 × TSN 506 ND	
	30	TSN 305 G	TSN 305 A	CR 400300	–	–	2 × TSN 305 S	2 × TSN 305 ND	
	35	–	–	–	–	2 × FS 170	–	–	
206-305	25	TSN 606 G	TSN 606 A	CR 400250	TSN 606 C	–	2 × TSN 606 S	2 × TSN 606 ND	ASNH 507-606
	30	TSN 507 G	TSN 507 A	CR 400300	TSN 507 C	–	2 × TSN 507 S	2 × TSN 507 ND	
	35	TSN 206 G	TSN 206 A	CR 400350	–	–	2 × TSN 206 S	2 × TSN 206 ND	
	45	–	–	–	–	2 × FS 170	–	–	
507-606	25	TSN 606 G	TSN 606 A	CR 400250	TSN 606 C	–	2 × TSN 606 S	2 × TSN 606 ND	ASNH 507-606
	30	TSN 507 G	TSN 507 A	CR 400300	TSN 507 C	–	2 × TSN 507 S	2 × TSN 507 ND	
	35	TSN 306 G	TSN 306 A	CR 400350	–	–	2 × TSN 306 S	2 × TSN 306 ND	
	45	–	–	–	–	2 × FS 170	–	–	
207	40	TSN 509 G	TSN 509 A	CR 400400	TSN 509 C	–	2 × TSN 509 S	2 × TSN 509 ND	ASNH 509
	45	TSN 207 G	TSN 207 A	CR 400450	–	–	2 × TSN 207 S	2 × TSN 207 ND	
	55	–	–	–	–	4 × FS 170	–	–	
508-607	30	TSN 607 G	TSN 607 A	CR 400300	TSN 607 C	–	2 × TSN 607 S	2 × TSN 607 ND	ASNH 508-607
	35	TSN 508 G	TSN 508 A	CR 400350	TSN 508 C	–	2 × TSN 508 S	2 × TSN 508 ND	
	50	–	–	–	–	4 × FS 170	–	–	
208-307	35	TSN 608 G	TSN 608 A	CR 400350	TSN 608 C	–	2 × TSN 608 S	2 × TSN 608 ND	ASNH 510-608
	45	TSN 307 G	TSN 307 A	CR 400450	–	–	2 × TSN 307 S	2 × TSN 307 ND	
	50	TSN 208 G	TSN 208 A	CR 400500	–	–	2 × TSN 208 S	2 × TSN 208 ND	
	60	–	–	–	–	4 × FS 170	–	–	
509	40	TSN 509 G	TSN 509 A	CR 400400	TSN 509 C	–	2 × TSN 509 S	2 × TSN 509 ND	ASNH 509
	45	TSN 307 G	TSN 307 A	CR 400450	–	–	2 × TSN 307 S	2 × TSN 307 ND	
	55	–	–	–	–	4 × FS 170	–	–	
209	40	TSN 609 G	TSN 609 A	CR 400400	TSN 609 C	–	2 × TSN 609 S	2 × TSN 609 ND	ASNH 511-609
	50	TSN 511 G	TSN 511 A	CR 400500	TSN 511 C	–	2 × TSN 511 S	2 × TSN 511 ND	
	55	TSN 209 G	TSN 209 A	CR 400550	–	–	2 × TSN 209 S	2 × TSN 209 ND	
	65	–	–	–	–	4 × FS 170	–	–	
510-608	35	TSN 608 G	TSN 608 A	CR 400350	TSN 608 C	–	2 × TSN 608 S	2 × TSN 608 ND	ASNH 510-608
	45	TSN 510 G	TSN 510 A	CR 400450	TSN 510 C	–	2 × TSN 510 S	2 × TSN 510 ND	
	50	TSN 308 G	TSN 308 A	CR 400500	–	–	2 × TSN 308 S	2 × TSN 308 ND	
	60	–	–	–	–	4 × FS 170	–	–	

Page 3

Page 10

Housing Size	Shaft diameter d_a, d_b	Seal sets Design G 2 double-lip seals	Design A 2 V-ring seals	Loose V-ring	Design C 2 felt strips	Loose felt strips	Design S 2 labyrinth seals	Design ND	End cover
–	mm	–							–
210	45	TSN 610 G	TSN 610 A	CR 400450	TSN 610 C	–	2 × TSN 610 S	2 × TSN 610 ND	ASNH 512-610
	55	TSN 512 G	TSN 512 A	CR 400550	TSN 512 C	–	2 × TSN 512 S	2 × TSN 512 ND	
	60	TSN 210 G	TSN 210 A	CR 400600	–	–	2 × TSN 210 S	2 × TSN 210 ND	
	70	–	–	–	–	4 × FS 170	–	–	
511-609	40	TSN 609 G	TSN 609 A	CR 400400	TSN 609 C	–	2 × TSN 609 S	2 × TSN 609 ND	ASNH 511-609
	50	TSN 511 G	TSN 511 A	CR 400500	TSN 511 C	–	2 × TSN 511 S	2 × TSN 511 ND	
	55	TSN 309 G	TSN 309 A	CR 400550	–	–	2 × TSN 309 S	2 × TSN 309 ND	
	65	–	–	–	–	4 × FS 170	–	–	
211	50	TSN 611 G	TSN 611 A	CR 400500	TSN 611 C	–	2 × TSN 611 S	2 × TSN 611 ND	ASNH 513-611
	60	TSN 513 G	TSN 513 A	CR 400600	TSN 513 C	–	2 × TSN 513 S	2 × TSN 513 ND	
	65	TSN 211 G	TSN 211 A	CR 400650	–	–	2 × TSN 211 S	2 × TSN 211 ND	
	75	–	–	–	–	4 × FS 170	–	–	
512-610	45	TSN 610 G	TSN 610 A	CR 400450	TSN 610 C	–	2 × TSN 610 S	2 × TSN 610 ND	ASNH 512-610
	55	TSN 512 G	TSN 512 A	CR 400550	TSN 512 C	–	2 × TSN 512 S	2 × TSN 512 ND	
	60	TSN 310 G	TSN 310 A	CR 400600	–	–	2 × TSN 310 S	2 × TSN 310 ND	
	70	–	–	–	–	4 × FS 170	–	–	
212	55	TSN 612 G	TSN 612 A	CR 400550	TSN 612 C	–	2 × TSN 612 S	2 × TSN 612 ND	ASNH 515-612
	65	TSN 515 G	TSN 515 A	CR 400650	TSN 515 C	–	2 × TSN 515 S	2 × TSN 515 ND	
	70	TSN 212 G	TSN 212 A	CR 400700	–	–	2 × TSN 212 S	2 × TSN 212 ND	
	85	–	–	–	–	4 × FS 170	–	–	
513-611	50	TSN 611 G	TSN 611 A	CR 400500	TSN 611 C	–	2 × TSN 611 S	2 × TSN 611 ND	ASNH 513-611
	60	TSN 513 G	TSN 513 A	CR 400600	TSN 513 C	–	2 × TSN 513 S	2 × TSN 513 ND	
	65	TSN 311 G	TSN 311 A	CR 400650	–	–	2 × TSN 311 S	2 × TSN 311 ND	
	75	–	–	–	–	4 × FS 170	–	–	
213	60	TSN 613 G	TSN 613 A	CR 400600	TSN 613 C	–	2 × TSN 613 S	2 × TSN 613 ND	ASNH 516-613
	70	TSN 516 G	TSN 516 A	CR 400700	TSN 516 C	–	2 × TSN 516 S	2 × TSN 516 ND	
	75	TSN 213 G	TSN 213 A	CR 400750	–	–	2 × TSN 213 S	2 × TSN 213 ND	
	90	–	–	–	–	4 × FS 170	–	–	
515-612	55	TSN 612 G	TSN 612 A	CR 400550	TSN 612 C	–	2 × TSN 612 S	2 × TSN 612 ND	ASNH 515-612
	65	TSN 515 G	TSN 515 A	CR 400650	TSN 515 C	–	2 × TSN 515 S	2 × TSN 515 ND	
	70	TSN 312 G	TSN 312 A	CR 400700	–	–	2 × TSN 312 S	2 × TSN 312 ND	
	85	–	–	–	–	4 × FS 170	–	–	
215	65	TSN 615 G	TSN 615 A	CR 400650	TSN 615 C	–	2 × TSN 615 S	2 × TSN 615 ND	ASNH 518-615
	80	TSN 518 G	TSN 518 A	CR 400800	TSN 518 C	–	2 × TSN 518 S	2 × TSN 518 ND	
	85	TSN 215 G	TSN 215 A	CR 400850	–	–	2 × TSN 215 S	2 × TSN 215 ND	
	100	–	–	–	–	4 × FS 170	–	–	
516-613	60	TSN 613 G	TSN 613 A	CR 400600	TSN 613 C	–	2 × TSN 613 S	2 × TSN 613 ND	ASNH 516-613
	70	TSN 516 G	TSN 516 A	CR 400700	TSN 516 C	–	2 × TSN 516 S	2 × TSN 516 ND	
	75	TSN 313 G	TSN 313 A	CR 400750	–	–	2 × TSN 313 S	2 × TSN 313 ND	
	90	–	–	–	–	4 × FS 170	–	–	

Page 3

Page 10

Sealing arrangements for SNL plummer block housings

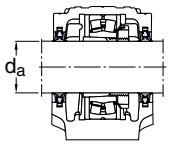

Housing series 5

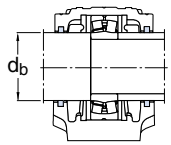

Housing series 2

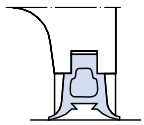

Design G
Split

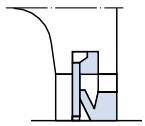

Design A
Unsplit

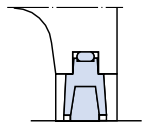

Design C
Split

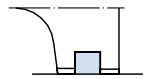

Design C
Felt strips
Split

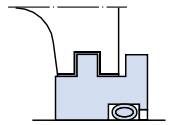

Design S
Unsplit

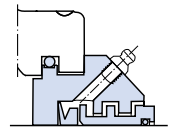

Design ND

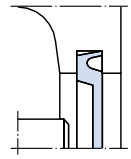

End cover

Housing Size	**Shaft diameter** d_a, d_b	**Seal sets** Design G 2 double-lip seals	Design A 2 V-ring seals	Loose V-ring	Design C 2 felt strips	Loose felt strips	Design S 2 labyrinth seals	Design ND	**End cover**
–	mm	–							–
216	90	TSN 216 G	TSN 216 A	CR 400900	–	–	2 × TSN 216 S	2 × TSN 216 ND	ASNH 216
	105	–	–	–	–	4 × FS 170	–	–	
517	75	TSN 517 G	TSN 517 A	CR 400750	TSN 517 C	–	2 × TSN 517 S	2 × TSN 517 ND	ASNH 517
	80	TSN 314 G	TSN 314 A	CR 400800	TSN 314 C	–	2 × TSN 314 S	2 × TSN 314 ND	
	95	–	–	–	–	4 × FS 170	–	–	
217	95	TSN 217 G	TSN 217 A	CR 400950	–	–	2 × TSN 217 S	2 × TSN 217 ND	ASNH 217
518-615	65	TSN 615 G	TSN 615 A	CR 400650	TSN 615 C	–	2 × TSN 615 S	2 × TSN 615 ND	ASNH 518-615
	80	TSN 518 G	TSN 518 A	CR 400800	TSN 518 C	–	2 × TSN 518 S	2 × TSN 518 ND	
	85	TSN 315 G	TSN 315 A	CR 400850	–	–	2 × TSN 315 S	2 × TSN 315 ND	
	100	–	–	–	–	4 × FS 170	–	–	
218	100	TSN 218 G	TSN 218 A	CR 401000	–	–	2 × TSN 218 S	2 × TSN 218 ND	ASNH 218
519-616	70	TSN 616 G	TSN 616 A	CR 400700	TSN 616 C	–	2 × TSN 616 S	2 × TSN 616 ND	ASNH 519-616
	85	TSN 519 G	TSN 519 A	CR 400850	TSN 519 C	–	2 × TSN 519 S	2 × TSN 519 ND	
	90	TSN 316 G	TSN 316 A	CR 400900	–	–	2 × TSN 316 S	2 × TSN 316 ND	
520-617	75	TSN 617 G	TSN 617 A	CR 400750	TSN 617 C	–	2 × TSN 617 S	2 × TSN 617 ND	ASNH 520-617
	90	TSN 520 G	TSN 520 A	CR 400900	TSN 520 C	–	2 × TSN 520 S	2 × TSN 520 ND	
	95	TSN 317 G	TSN 317 A	CR 400950	–	–	2 × TSN 317 S	2 × TSN 317 ND	
	115	TSN 220 G	TSN 220 A	CR 401100	–	–	2 × TSN 220 S	2 × TSN 220 ND	
522-619	85	TSN 619 G	TSN 619 A	CR 400850	TSN 619 C	–	2 × TSN 619 S	2 × TSN 619 ND	ASNH 522-619
	100	TSN 522 G	TSN 522 A	CR 401000	TSN 522 C	–	2 × TSN 522 S	2 × TSN 522 ND	
	110	–	TSN 319 A	CR 401100	–	–	2 × TSN 319 S	2 × TSN 319 ND	
	125	TSN 222 G	TSN 222 A	CR 401300	–	–	2 × TSN 222 S	2 × TSN 222 ND	
524-620	90	TSN 620 G	TSN 620 A	CR 400900	TSN 620 C	–	2 × TSN 620 S	2 × TSN 620 ND	ASNH 524-620
	110	TSN 524 G	TSN 524 A	CR 401100	TSN 524 C	–	2 × TSN 524 S	2 × TSN 524 ND	
	115	–	TSN 320 A	CR 401100	–	–	2 × TSN 320 S	2 × TSN 320 ND	
	135	TSN 224 G	TSN 224 A	CR 401300	–	–	2 × TSN 224 S	2 × TSN 224 ND	
526	115	TSN 526 G	TSN 526 A	CR 401100	TSN 526 C	–	2 × TSN 526 S	2 × TSN 526 ND	ASNH 526
	145	TSN 226 G	TSN 226 A	CR 401500	–	–	2 × TSN 226 S	2 × TSN 226 ND	
528	125	TSN 528 G	TSN 528 A	CR 401300	TSN 528 C	–	2 × TSN 528 S	2 × TSN 528 ND	ASNH 528
	155	TSN 228 G	TSN 228 A	CR 401500	TSN 228 C	–	2 × TSN 228 S	2 × TSN 228 ND	
530	135	TSN 530 G	TSN 530 A	CR 401300	TSN 530 C	–	2 × TSN 530 S	2 × TSN 530 ND	ASNH 530
	165	TSN 230 G	TSN 230 A	CR 401700	–	–	2 × TSN 230 S	2 × TSN 230 ND	
532	140	TSN 532 G	TSN 532 A	CR 401400	TSN 532 C	–	2 × TSN 532 S	2 × TSN 532 ND	ASNH 532
	175	TSN 232 G	TSN 232 A	CR 401700	–	–	2 × TSN 232 S	2 × TSN 232 ND	

Other products for trouble-free operation

Robust, high-performance standard bearings

SKF produces the self-aligning ball bearings, spherical roller bearings and CARB bearings normally incorporated in SNL plummer block housings in many sizes and several designs. All three bearing types are self-aligning. The degree of misalignment which can be accommodated depends on the bearing series and also on the seals used in the SNL housings.

The self-aligning ball bearings and spherical roller bearings can be used for both locating and non-locating bearing arrangements. At non-locating positions, the bearing outer ring is free to move axially in its seating in the housing bore. CARB bearings, on the other hand, accommodate axial displacements within the bearing and are always non-locating. It is usual to combine a CARB bearing at the non-locating side with a spherical roller bearing arranged as a locating bearing at the other side.

Self-aligning ball bearings
Series 12, 22, 13 and 23 self-aligning ball bearings can be incorporated in SNL plummer block housings. Sealed self-aligning ball bearings of series 22-2RS1 are also appropriate, particularly where the surroundings in which the plummer blocks are to operate are heavily contaminated. Self-aligning ball bearings are available with tapered bore for mounting on adapter sleeves or with cylindrical bore.

Spherical roller bearings
The spherical roller bearings which can be used in SKF plummer block housings of the SNL design are those of series 222, 232, 213 and 223. The bearings are available with tapered bore for mounting on adapter or withdrawal sleeves, or with cylindrical bore. Sealed spherical roller bearings of ISO Dimension Series 22 can also be incorporated.

CARB bearings
These bearings are a more recent addition to the range of ball and roller bearings offered by SKF and are an SKF invention. CARB bearings of series C 22, C 23 and C 32 can be incorporated in SNL plummer block housings.

Although available in a caged as well as a full complement version, it is normally recommended that caged bearings are used in SNL housings. CARB bearings are available with a tapered bore for mounting on an adapter sleeve or a withdrawal sleeve, as well as with a cylindrical bore.



For easy mounting – adapter and withdrawal sleeves

Generally the bearings with a tapered bore incorporated in SNL plummer block housings are mounted on smooth or stepped shafts with the aid of an adapter sleeve or, on stepped shafts only, a withdrawal sleeve. These sleeves are produced by SKF in appropriate sizes for the range of bearings which can be used in SNL housings. The adapter sleeves are the more popular as they are more versatile and are easier to mount.

Adapter sleeves

These are slotted sleeves with a tapered outside diameter. The sizes used with bearings for SNL housings have an external taper of 1:12 and are supplied complete with lock nut and locking washer. Their dimensions are in accordance with ISO 2982-1:1995.

When using adapter sleeves on smooth shafts it is possible to locate the bearing at any position on the shaft and no additional axial location is required.

Withdrawal sleeves

These are also slotted sleeves with a tapered outside diameter. The sizes used with bearings for SNL housings have an external taper of 1:12. Their dimensions are in accordance with ISO 2982-1:1995.

Bearings on withdrawal sleeves must be mounted against a fixed abutment, e.g. a shaft shoulder. The withdrawal sleeve must be secured in position after it has been pressed into the bearing bore by a lock nut or end plate on the shaft. The nuts are not supplied with the sleeves.

More information about

- ***self-aligning ball bearings and spherical roller bearings (→ General Catalogue 4000 and brochure 5100)***
- ***CARB bearings (→ brochure 5102)***
- ***adapter and withdrawal sleeves (→ catalogue 3766)***



Other products

Lock nuts
SKF lock nuts, also referred to as shaft nuts, are available in several designs to axially locate bearings on shaft ends. The most popular are those of series KM, KML and HM. These nuts have four or eight equally spaced slots in the outside diameter and are locked in position with locking washers or locking clips engaging a groove in the shaft. The nut dimensions are in accordance with ISO 2982-2:1995 as are the dimensions of the series MB and MBL locking washers and MS locking clips.

Other lock nuts produced by SKF include those of series KMT, KMTA, KMK and KMFE, that do not require a groove in the shaft.



Lubricating greases for bearings
Lubrication is a necessity for proper bearing performance. Grease is normally used for applications involving SNL plummer blocks. SKF has put considerable effort into establishing a range of high-quality greases for ball and roller bearing lubrication.

The SKF SYSTEM 24 automatic lubricator can also be used with SNL plummer block housings. An adapter can be fitted to the standard drilled and tapped hole in the housing cap. It should be remembered that surplus grease should be able to leave the housing.



SKF ConCentra roller bearing units
These units are plummer blocks with ready-lubricated bearings for easy installation. They comprise

- a one-piece plummer block housing of grey cast iron,
- a spherical roller bearing of series 222 with special inner ring,
- a special adapter sleeve, and
- two seals of nitrile rubber double lip type or two labyrinth seals.

The units are available in a locating and a non-locating version.



Other bearing housings

To meet a wide variety of application demands, SKF produces a comprehensive range of bearing housings. The majority of these are of the split plummer block type but the SKF range also includes

- one-piece plummer block housings,
- flanged housings,
- take-up housings, and
- two-bearing housings.

Most of these housings are designed to take self-aligning bearings, and the range extends to shaft diameters up to and including 1 800 mm. Housings are available for oil lubrication as well as grease lubrication and also for bearings with cylindrical bore or with tapered bore, mounted on adapter or withdrawal sleeves. Smooth or stepped shafts can be used.

Various different types of seal are used. Most housings are made of grey cast iron but spheroidal graphite cast iron or cast steel housings are included in the range.

For further information, please contact SKF.

More information about
- ***lock nuts (→ brochure 4412 and catalogue 3766)***
- ***greases (→ catalogue MP3000)***
- ***ConCentra roller bearing units (→ brochure 5103)***
- ***housings (→ catalogue 4005)***



Condition monitoring equipment

The goals of condition monitoring are to maximise the time that the machine is functioning well and to minimise the number of breakdowns, thereby significantly reducing operating downtime and maintenance costs.

To achieve this, it is recommended that the bearing and machine condition be monitored either periodically or continuously. Condition monitoring enables incipient bearing damage to be detected and evaluated, so that bearing replacement can be scheduled for a time when the machine is not in operation, to avoid unplanned stoppages. Applied to all machinery (not just sensitive or problematic machines), condition monitoring improves machinery operation to an optimum level, often exceeding the original equipment specifications.

SKF provides a comprehensive range of condition monitoring equipment to measure all important parameters. These include

- temperature,
- speed,
- noise,
- oil condition,
- shaft alignment,
- vibration and
- bearing condition.

The range includes lightweight, handheld devices for manual use as well as complex continuous monitoring systems for fixed installations in connection with preventive maintenance.

One example is the Machine Reliability Inspection System MARLIN™ which is at the leading edge of technology and allows storage of up to 2 000 measuring points. It can be used to diagnose machines and individual bearings and is backed by tailored software for the evaluation of the readings including enveloping vibration acceleration curves.



Recording vibration values using an SKF Microlog data collection unit

Taking the temperature



Noise testing



The MARLIN™ machine reliability inspection system



The SKF Group – a worldwide corporation

SKF is an international industrial Group operating in some 130 countries and is world leader in bearings.

The company was founded in 1907 following the invention of the self-aligning ball bearing by Sven Wingquist and, after only a few years, SKF began to expand all over the world.

Today, SKF has some 45 000 employees and around 80 manufacturing facilities spread throughout the world. An international sales network includes a large number of sales companies and some 7 000 distributors and retailers. Worldwide availability of SKF products is supported by a comprehensive technical advisory service.

The key to success has been a consistent emphasis on maintaining the highest quality of its products and services. Continuous investment in research and development has also played a vital role, resulting in many examples of epoch-making innovations.

The business of the Group consists of bearings, seals, special steel and a comprehensive range of other high-tech industrial components. The experience gained in these various fields provides SKF with the essential knowledge and expertise required in order to provide the customers with the most advanced engineering products and efficient service.





The SKF Group is the first major bearing manufacturer to have been granted approval according to ISO 14001, the international standard for environmental management systems. The certificate is the most comprehensive of its kind and covers more than 60 SKF production units in 17 countries.



The SKF Engineering & Research Centre is situated just outside Utrecht in The Netherlands. In an area of 17 000 square metres (185 000 sq.ft) some 150 scientists, engineers and support staff are engaged in the further improvement of bearing performance. They are developing technologies aimed at achieving better materials, better designs, better lubricants and better seals – together leading to an even better understanding of the operation of a bearing in its application. This is also where the SKF Life Theory was evolved, enabling the design of bearings which are even more compact and offer even longer operational life.



SKF has developed the Channel concept in factories all over the world. This drastically reduces the lead time from raw material to end product as well as work in progress and finished goods in stock. The concept enables faster and smoother information flow, eliminates bottlenecks and bypasses unnecessary steps in production. The Channel team members have the knowledge and commitment needed to share the responsibility for fulfilling objectives in areas such as quality, delivery time, production flow etc.



SKF manufactures ball bearings, roller bearings and plain bearings. The smallest are just a few millimetres (a fraction of an inch) in diameter, the largest several metres. SKF also manufactures bearing and oil seals which prevent dirt from entering and lubricant from leaking out. SKF's subsidiaries CR and RFT S.p.A. are among the world's largest producers of seals.

® SKF and CARB are registered trademarks of SKF.

© Copyright SKF 2002
The contents of this publication are the copyright of the publisher and may not be reproduced (even extracts) unless permission is granted. Every care has been taken to ensure the accuracy of the information contained in this publication but no liability can be accepted for any loss or damage whether direct, indirect or consequential arising out of the use of the information contained herein.

Publication **4403/III E** · January 2002

Printed in Sweden on environmentally friendly, chlorine-free paper (Multiart Silk) by Hyltebruks Tryckeri AB.