7210 BECBP

Popular item
SKF Explorer

Dimensions

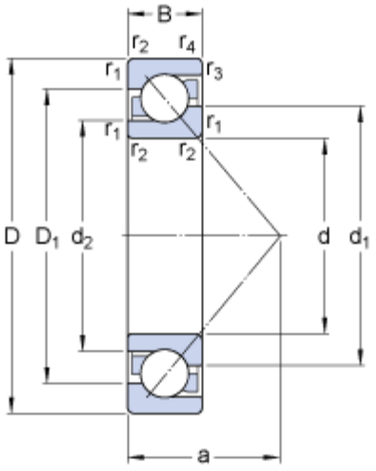

d		50	mm
D		90	mm
B		20	mm
d_1	≈	65.75	mm
d_2	≈	57.68	mm
D_1	≈	75.15	mm
a		39	mm
$r_{1,2}$	min.	1.1	mm
$r_{3,4}$	min.	0.6	mm

Abutment dimensions

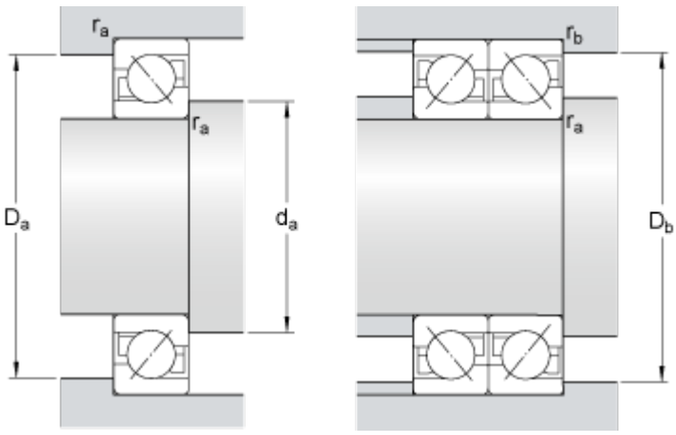

d_a	min.	57	mm
D_a	max.	83	mm
D_b	max.	85.8	mm
r_a	max.	1	mm
r_b	max.	0.6	mm

Calculation data

Basic dynamic load rating	C	40	kN
Basic static load rating	C_0	31	kN
Fatigue load limit	P_u	1.32	kN
Reference speed		9000	r/min
Limiting speed		9000	r/min
Calculation factor	A	0.014	
Calculation factor	k_r	0.095	
Calculation factor	e	1.14	

Single bearing or bearing pair arranged in tandem

Calculation factor	X	0.35	

Calculation factor	Y_0	0.26
Calculation factor	Y_2	0.57

Bearing pair arranged back-to-back or face-to-face

Calculation factor	X	0.57
Calculation factor	Y_0	0.52
Calculation factor	Y_1	0.55
Calculation factor	Y_2	0.93

Mass

Mass bearing	0.47	kg