MURR ELEKTRONIK
stay connected

M12 female 0° shielded with cable

PUR 8x0.25 shielded gy UL/CSA+drag chain 5m

Female straight
M12, 8-pole
shielded
with cable sleeves
Plastic housings with good resistance against chemicals and oils.
The resistance to aggressive media should be individually tested for your application. Further details on request.
Further cable lengths on request.

Link to Product

Illustration

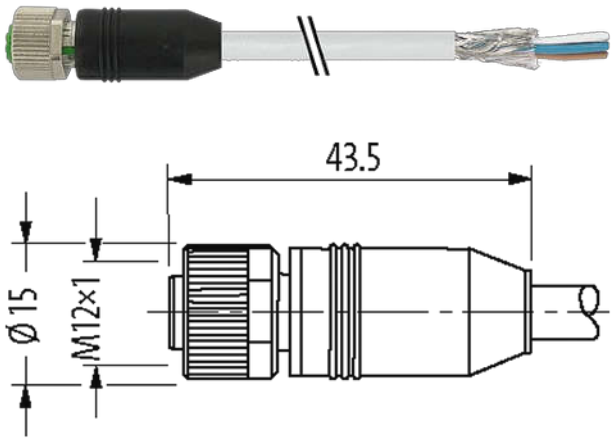

Product may differ from Image

Approvals

cCSAus	* only for products with UL/CSA approved cable

Form

Form	17121

The information in this brochure has been compiled with the utmost care.
Liability for the correctness completeness and topicality of the information is restricted to gross negligence. Version: 11/20

MURR ELEKTRONIK
stay connected

General data	
Standards	DIN EN 61076-2-101 (M12)
Mounting method	inserted, tightened
Material (contact)	Copper alloy
Material (contact surface)	Au
Material (gasket)	FKM
Pollution Degree	3
Stripping length (jacket)	60 mm
Temperature range	-25...+85 °C, depending on cable quality

Cables	
No./diameter of wires	8× 0.25 mm²
Wire isolation	PP (wh, br, gn, ye, gr, pk, bl, rd)
C-track properties	5 Mio.
Material (jacket)	PUR (UL/CSA)
Outer Ø	7.0 mm ±5%
Bend radius (moving)	10× outer Ø
Temperature range (fixed)	-40...+80 °C
Temperature range (mobile)	-25...+80 °C
Cable identification	291
Cable Type	3 (PUR)
Approval (cable)	cURus (AWM-Style 20549/10493); CE conform
Cable weight [g/m]	78,10
Material (wire)	Cu wire, bare
Resistor (core)	max. 79 Ω/km (20 °C)
Single wire Ø (core)	0.1 mm
Construction (core)	32× 0.1 mm (multi-strand wire class 6)
Diameter (core)	8× 0.25 mm²
AWG	similar to AWG 24
Material (wire isolation)	PP
Material property (wire isolation)	CFC-, halogen-, cadmium-, silicone- and lead-free
Shore hardness (wire isolation)	70 ±5 D
Wire-Ø incl. isolation	1.2 mm ±5%
Color/numbering of wires	br, wh, rd, bl, pk, gr, ye, gn
Stranding combination	8 wires twisted around central filler
Shield	yes
	min. 80%
Material (jacket)	PUR
Material property (jacket)	CFC-, halogen-, cadmium-, silicone- and lead-free, matt, low-adhesion, machine easy to process, abrasion-resistant, hydrolysis and microbial resistant
Shore hardness (jacket)	90 ±5 A
Outer-Ø (jacket)	7.0 mm ±5%
Color (jacket)	gray
chemical resistance	good resistance to oil, gasoline and chemicals (EN 60811-404)
thermal resistance	flame retardant UL 1581 VW1 / CSA FT1 / IEC 60332-1, IEC 60332-2-2
Nominal voltage	300 V AC
Test voltage	2000 V AC
Current load capacity	to DIN VDE 0298-4
Temperature range (fixed)	-40...+80 °C, (+90 °C at max. 10 000 operating hours)
Temperature range (mobile)	-25...+80 °C, (+90 °C at max. 10 000 operating hours)

The information in this brochure has been compiled with the utmost care.
Liability for the correctness completeness and topicality of the information is restricted to gross negligence. Version: 11/20

Bend radius (fixed)	5× outer Ø
Bend radius (moving)	10× outer Ø
No. of bending cycles (C-track)	max. 5 Mio. (25 °C)
Traversing distance (C-track)	max. 5 m (horizontal)
Travel speed (C-track)	max. 3.3 m/s
Acceleration (C-track)	max. 5 m/s²
Torsion stress	±30 °/m
No. of torsion cycles	max. 2 Mio. (25 °C)
Torsion speed	35 cycles/min
Jacket Color	gray

Technical Data

Operating voltage	max. 30 V AC/DC
Operating voltage (only UL listed)	max. 30 V AC/DC
Rated surge voltage	0.8 kV
Operating current per contact	max. 2 A
No. of poles	8
Material group	IEC 60664-1, category I
Coding	A-coded
LED display	no
Locking of ports	Screw thread (M12×1 mm) recommended torque 0.6 Nm, self-securing
Compression gland	M12 (SW13)
Protection	IP65, IP66K, IP67 inserted and tightened (EN 60529)
Material	PUR
Locking material	Zinc die casting, matte nickel plated
suitable for corrugated tube (internal Ø)	10 mm

Commercial data

country of origin	CZ
customs tariff number	85444290
EAN	4048879195775
eClass	27279218
Packaging unit	1

Sketch

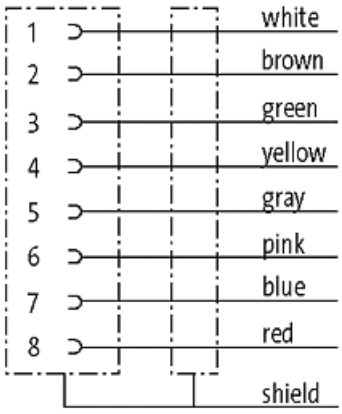

Product may differ from Image

The information in this brochure has been compiled with the utmost care.
Liability for the correctness completeness and topicality of the information is restricted to gross negligence. Version: 11/20