IA5135

Inductive sensor

IAE2010-FRKG/US-100-IRF

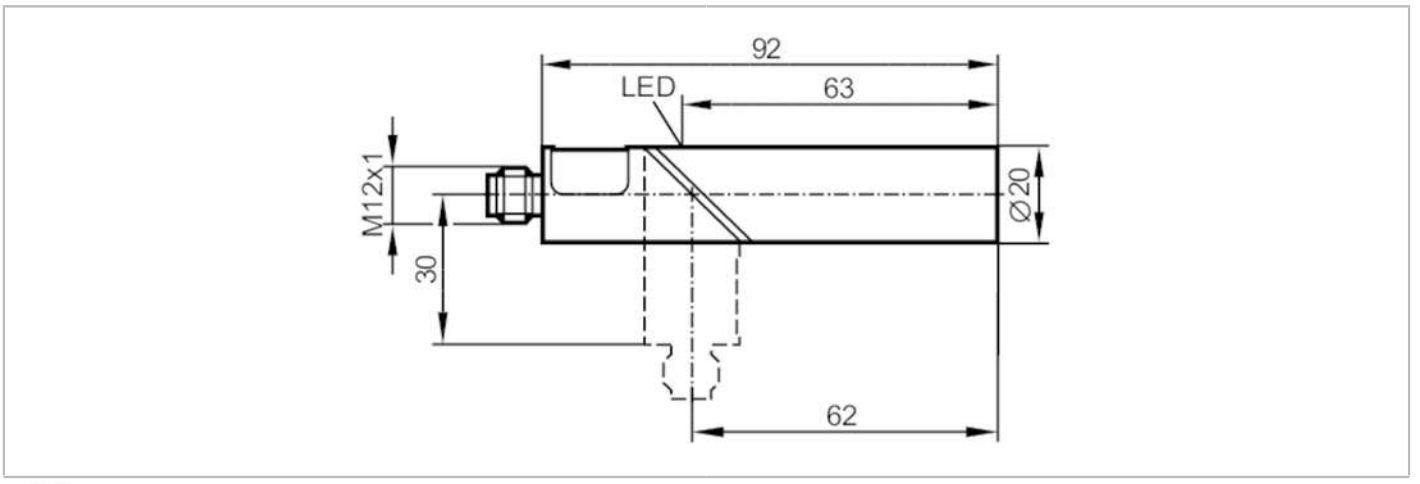

Product characteristics		
Electrical design		PNP/NPN
Output function		normally open / normally closed; (selectable)
Sensing range	[mm]	10
Housing		cylindrical
Dimensions	[mm]	Ø 20 / L = 92
Electrical data		
Operating voltage	[V]	10...55 DC
Protection class		III
Reverse polarity protection		yes
Outputs		
Electrical design		PNP/NPN
Output function		normally open / normally closed; (selectable)
Max. voltage drop switching output DC	[V]	4.6
Minimum load current	[mA]	5
Max. leakage current	[mA]	1
Permanent current rating of switching output DC	[mA]	400
Switching frequency DC	[Hz]	450
Short-circuit protection		yes
Type of short-circuit protection		pulsed
Overload protection		yes
Detection zone		
Sensing range	[mm]	10
Real sensing range Sr	[mm]	10 ± 10 %
Operating distance	[mm]	0...8.1
Accuracy / deviations		
Correction factor		steel: 1 / stainless steel: 0.7 / brass: 0.4 / aluminium: 0.3 / copper: 0.2

IA5135

Inductive sensor

IAE2010-FRKG/US-100-IRF

Hysteresis	[% of Sr]	1...15	
Switch point drift	[% of Sr]	-10...10	
Operating conditions			
Ambient temperature	[°C]	-25...80	
Protection		IP 65	
Tests / approvals			
EMC		EN 60947-5-2	
		EN 55011	class B
MTTF	[years]	1759	
Mechanical data			
Weight	[g]	93.3	
Housing		cylindrical	
Mounting		non-flush mountable	
Dimensions	[mm]	Ø 20 / L = 92	
Materials		PBT; LED window: PC	
Displays / operating elements			
Display		switching status	1 x LED, yellow
Accessories			
Items supplied		Mounting clamps: 1	
Remarks			
Pack quantity		1 pcs.	
Electrical connection - plug			

Connector: 1 x M12; coding: A



