O5E51A

Through-beam sensor receiver

O5E-FPKG/US100/3D

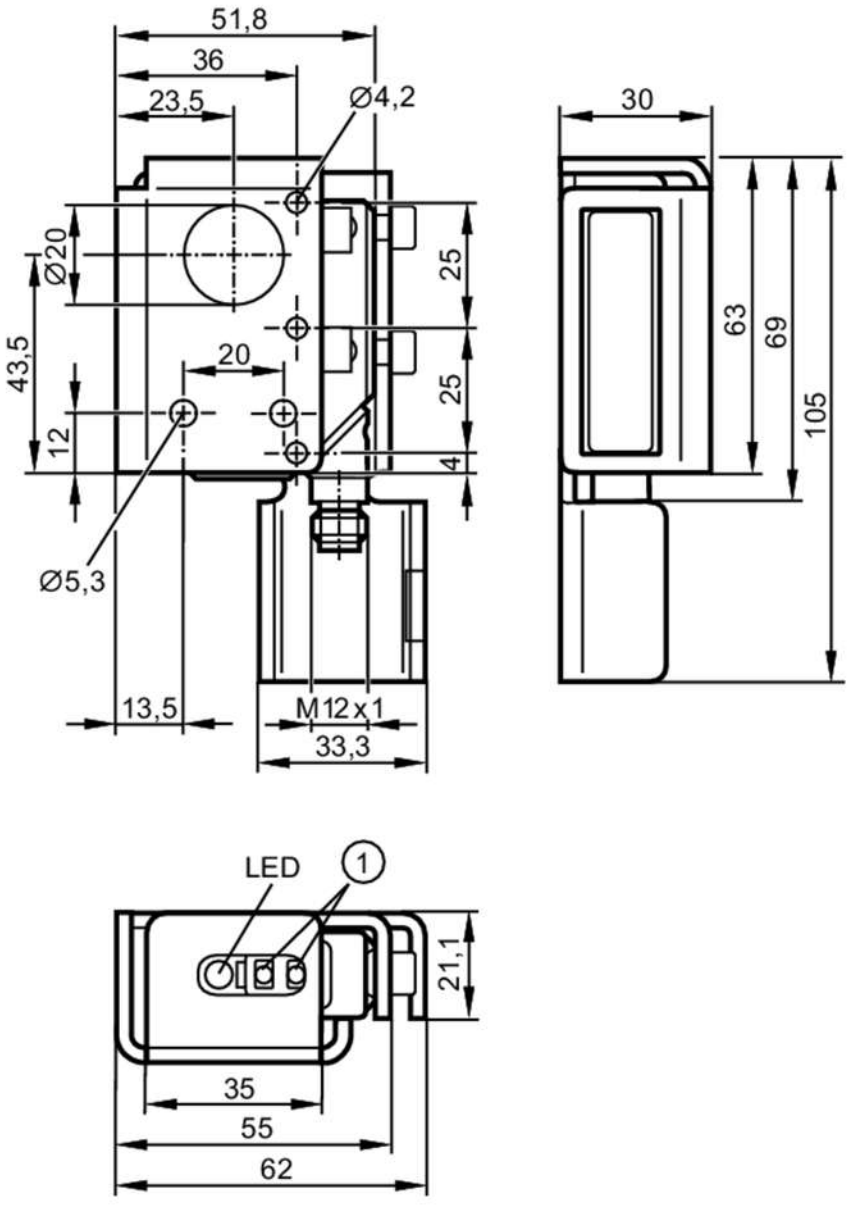

1 programming buttons

Product characteristics		
Type of light		red light
Housing		rectangular
Application		
Function principle		Through-beam sensor
Electrical data		
Operating voltage	[V]	10...30 DC; (when used outside the hazardous area: 10...36)
Current consumption	[mA]	11
Protection class		III
Reverse polarity protection		yes

O5E51A

Through-beam sensor receiver

O5E-FPKG/US100/3D

Type of light		red light
Outputs		
Electrical design		PNP
Output function		light-on/dark-on mode; (programmable)
Max. voltage drop switching output DC	[V]	2.5
Permanent current rating of switching output DC	[mA]	100; (when used outside the hazardous area: 200)
Switching frequency DC	[Hz]	1000
Short-circuit protection		yes
Type of short-circuit protection		pulsed
Overload protection		yes
Detection zone		
Transmitter / receiver		receiver
Range	[m]	< 25
Range adjustable		yes
Operating conditions		
Ambient temperature	[°C]	-10...50
Note on ambient temperature		when used outside the hazardous area: -25...60 °C
Protection		IP 65
Tests / approvals		
ATEX marking		II 3D Ex tc IIIC T105°C Dc X
EMC		EN 60947-5-2
MTTF	[years]	801
Mechanical data		
Weight	[g]	336
Housing		rectangular
Dimensions	[mm]	105 x 30 x 62
Materials		housing: PA; bezel: stainless steel; operator interface: TPU; Protective bracket: stainless steel
Lens material		PMMA
Lens alignment		side lens
Displays / operating elements		
Display		switching status: 1 x LED, yellow
Teach function		yes
Electronic lock		yes
Remarks		
Pack quantity		1 pcs.

O5E51A

Through-beam sensor receiver

O5E-FPKG/US100/3D

Electrical connection

Connector: 1 x M12; coding: A

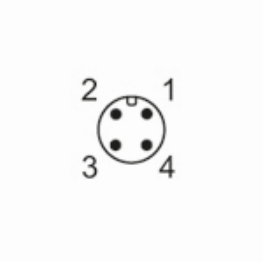

Connection

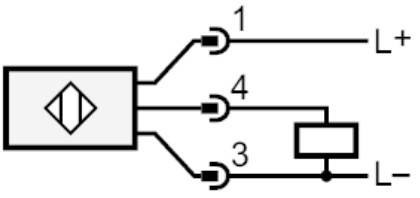

O5E51A

Through-beam sensor receiver

O5E-FPKG/US100/3D

Diagrams and graphs

excess gain graph

